MACARTHUR TRANSIT VILLAGE PROJECT

Volume 3. Draft Environmental Impact Report
(Appendix F)
SCH No. 2006022075

Prepared for:
City of Oakland

January 2008

MACARTHUR TRANSIT VILLAGE PROJECT

Volume 3. Draft Environmental Impact Report (Appendix F)

SCH No. 2006022075

Prepared for:
City of Oakland

January 2008

TABLE OF CONTENTS
VOLUME 3

APPENDIX F: TRANSPORTATION, CIRCULATION AND PARKING

APPENDIX F

TRANSPORTATION, CIRCULATION AND PARKING

MacArthur Transit Village Project DEIR

Technical Transportation Appendices

January 2008

FEHR & PEERS
TRANSPORTATION CONSULTANTS

Appendices

Appendix A: Intersection Turning Movement Counts

Appendix B: Existing Conditions Intersection Level of Service Calculation Worksheets

Appendix C: Project Trip Generation

Appendix D: Existing Plus Project Conditions Intersection Level of Service Calculation Worksheets

Appendix E: Year 2015 No Project Conditions Intersection Level of Service Calculation Worksheets

Appendix F: Year 2015 Plus Project Conditions Intersection Level of Service Calculation Worksheets

Appendix G: Year 2030 No Project Conditions Intersection Level of Service Calculation Worksheets

Appendix H: Year 2030 Plus Project Conditions Intersection Level of Service Calculation Worksheets

Appendix I: CMA Analysis Calculations

Appendix J: Telegraph Avenue Bus Rapid Transit Analysis

Appendix K BART Ridership Estimates

Appendix L: Existing Plus Commercial Alterative Intersection Level of Service Calculation Worksheets

Appendix M: Year 2015 Plus Commercial Alterative Intersection Level of Service Calculation Worksheets

Appendix N: Year 2030 Plus Commercial Alterative Intersection Level of Service Calculation Worksheets

Appendix O: Existing Plus Tower Alterative Intersection Level of Service Calculation Worksheets

Appendix P: Year 2015 Plus Tower Alterative Intersection Level of Service Calculation Worksheets

Appendix Q: Year 2030 Plus Tower Alterative Intersection Level of Service Calculation Worksheets

APPENDIX A:
INTERSECTION TURNING MOVEMENT COUNTS

MARKS TRAFFIC DATA

AM 03
OAKLAND
FPW EK
TITO [916] 715-4006

File Name : shattuck-51st=a
Site Code : 00000000
Start Date : 5/16/2006
Page No : 1

Groups Printed- VEHICLES ONLY

	SHATTUCK AV Southbound				51 st 52 nd Westbound				SHATTUCK AV Northbound				51 st 52 nd Eastbound				
Start Time	RT	TH	LT	App. Total	RT	TH	LT	App. Total	RT	TH	LT	App. Total	RT	TH	LT	App. Total	Int. Total
Factor	1.0	1.0	1.0		1.0	1.0	1.0		1.0	1.0	1.0		1.0	1.0	1.0		
07:00	21	38	14	73	18	229	10	257	9	31	19	59	16	202	28	246	635
07:15	30	43	14	87	24	241	18	283	17	49	23	89	28	216	37	281	740
07:30	41	55	31	127	38	272	29	339	19	52	39	110	31	221	45	297	873
07:45	52	68	48	168	46	312	21	379	28	69	44	141	49	250	62	361	1049
Total	144	204	107	455	126	1054	78	1258	73	201	125	399	124	889	172	1185	3297
08:00	68	79	42	189	52	297	20	369	20	81	58	159	67	256	79	402	1119
08:15	73	72	38	183	45	325	18	388	15	77	68	160	43	238	61	342	1073
08:30	62	69	37	168	38	309	16	363	9	52	49	110	28	212	88	328	969
08:45	43	52	29	124	30	288	11	329	6	49	31	86	32	200	60	292	831
Total	246	272	146	664	165	1219	65	1449	50	259	206	515	170	906	288	1364	3992
Grand Total	390	476	253	1119	291	2273	143	2707	123	460	331	914	294	1795	460	2549	7289
Apprch %	34.9	42.5	22.6		10.7	84	5.3		13.5	50.3	36.2		11.5	70.4	18		
Total %	5.4	6.5	3.5	15.4	4	31.2	2	37.1	1.7	6.3	4.5	12.5	4	24.6	6.3	35	

	SHATTUCK AV Southbound				51 st 52 nd Westbound				SHATTUCK AV Northbound				51 st 52 nd Eastbound				
Start Time	RT	TH	LT	App. Total	RT	TH	LT	App. Total	RT	TH	LT	App. Total	RT	TH	LT	App. Total	Int. Total
Peak Hour Analysis From 07:00 to 08:45 - Peak 1 of 1																	
Peak Hour for Entire Intersection Begins at 07:45																	
07:45	52	68	**48**	168	46	312	**21**	379	**28**	69	44	141	49	250	62	361	1049
08:00	68	**79**	42	**189**	**52**	297	20	369	20	**81**	58	159	**67**	**256**	79	**402**	**1119**
08:15	**73**	72	38	183	45	**325**	18	**388**	15	77	**68**	**160**	43	238	61	342	1073
08:30	62	69	37	168	38	309	16	363	9	52	49	110	28	212	**88**	328	969
Total Volume	255	288	165	708	181	1243	75	1499	72	279	219	570	187	956	290	1433	4210
% App. Total	36	40.7	23.3		12.1	82.9	5		12.6	48.9	38.4		13	66.7	20.2		
PHF	.873	.911	.859	.937	.870	.956	.893	.966	.643	.861	.805	.891	.698	.934	.824	.891	.941

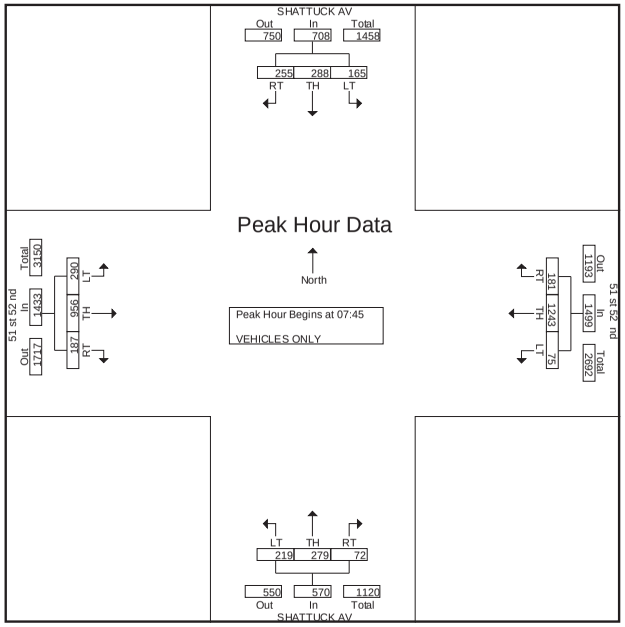

MARKS TRAFFIC DATA

AM 04
OAKLAND
FPW H
TITO [916] 715-4006

File Name : telegraph-52nd-a
Site Code : 00000000
Start Date : 5/11/2006
Page No : 1

Groups Printed- VEHICLES ONLY

	TELEGRAPH AVE Southbound				52 nd ST CLAREMONT Westbound				TELEGRAPH AVE Northbound				52 nd ST CLAREMONT Eastbound				
Start Time	RT	TH	LT	App. Total	RT	TH	LT	App. Total	RT	TH	LT	App. Total	RT	TH	LT	App. Total	Int. Total
Factor	1.0	1.0	1.0		1.0	1.0	1.0		1.0	1.0	1.0		1.0	1.0	1.0		
07:00	4	58	1	63	7	6	6	19	12	62	2	76	0	0	0	0	158
07:15	48	80	7	135	17	4	4	25	18	85	0	103	3	4	0	7	270
07:30	58	88	6	152	19	12	12	43	26	133	2	161	0	0	0	0	356
07:45	55	110	21	186	17	14	13	44	31	163	3	197	0	0	2	2	429
Total	165	336	35	536	60	36	35	131	87	443	7	537	3	4	2	9	1213
08:00	62	113	18	193	26	24	15	65	22	139	3	164	1	0	1	2	424
08:15	85	138	19	242	38	24	25	87	42	196	1	239	2	0	3	5	573
08:30	78	150	14	242	27	20	25	72	53	201	3	257	3	0	3	6	577
08:45	93	147	21	261	28	13	24	65	50	187	3	240	1	0	1	2	568
Total	318	548	72	938	119	81	89	289	167	723	10	900	7	0	8	15	2142
Grand Total	483	884	107	1474	179	117	124	420	254	1166	17	1437	10	4	10	24	3355
Apprch %	32.8	60	7.3		42.6	27.9	29.5		17.7	81.1	1.2		41.7	16.7	41.7		
Total %	14.4	26.3	3.2	43.9	5.3	3.5	3.7	12.5	7.6	34.8	0.5	42.8	0.3	0.1	0.3	0.7	

	TELEGRAPH AVE Southbound				52 nd ST CLAREMONT Westbound				TELEGRAPH AVE Northbound				52 nd ST CLAREMONT Eastbound				
Start Time	RT	TH	LT	App. Total	RT	TH	LT	App. Total	RT	TH	LT	App. Total	RT	TH	LT	App. Total	Int. Total
Peak Hour Analysis From 07:00 to 08:45 - Peak 1 of 1																	
Peak Hour for Entire Intersection Begins at 08:00																	
08:00	62	113	18	193	26	**24**	15	65	22	139	**3**	164	1	0	1	2	424
08:15	85	138	19	242	**38**	24	**25**	**87**	42	196	1	239	2	0	**3**	5	573
08:30	78	**150**	14	242	27	20	25	72	**53**	**201**	3	**257**	**3**	0	3	**6**	**577**
08:45	**93**	147	**21**	**261**	28	13	24	65	50	187	3	240	1	0	1	2	568
Total Volume	318	548	72	938	119	81	89	289	167	723	10	900	7	0	8	15	2142
% App. Total	33.9	58.4	7.7		41.2	28	30.8		18.6	80.3	1.1		46.7	0	53.3		
PHF	.855	.913	.857	.898	.783	.844	.890	.830	.788	.899	.833	.875	.583	.000	.667	.625	.928

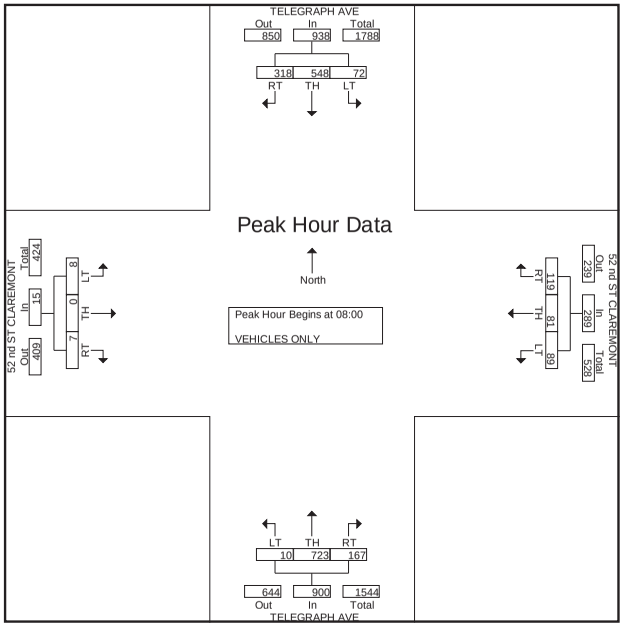

MARKS TRAFFIC DATA

AM 05
OAKLAND
FPW C
TITO [916] 715-4006

File Name : telegraph-51st-a
Site Code : 00000000
Start Date : 5/23/2006
Page No : 1

Groups Printed- VEHICLES ONLY

	TELEGRAPH AVE Southbound				51 st ST Westbound				TELEGRAPH AVE Northbound				51 st ST Eastbound				
Start Time	RT	TH	LT	App. Total	RT	TH	LT	App. Total	RT	TH	LT	App. Total	RT	TH	LT	App. Total	Int. Total
Factor	1.0	1.0	1.0		1.0	1.0	1.0		1.0	1.0	1.0		1.0	1.0	1.0		
07:00	11	81	17	109	21	109	13	143	11	79	9	99	6	90	52	148	499
07:15	14	93	29	136	30	119	14	163	9	95	11	115	9	81	61	151	565
07:30	18	99	39	156	27	127	23	177	21	113	19	153	11	99	72	182	668
07:45	29	107	41	177	39	132	29	200	16	129	20	165	13	119	88	220	762
Total	72	380	126	578	117	487	79	683	57	416	59	532	39	389	273	701	2494
08:00	20	115	44	179	51	161	30	242	22	152	34	208	14	131	100	245	874
08:15	39	129	36	204	62	182	31	275	31	130	29	190	19	122	99	240	909
08:30	44	131	31	206	52	171	19	242	27	144	23	194	22	111	92	225	867
08:45	40	121	29	190	44	163	21	228	19	141	21	181	16	109	109	234	833
Total	143	496	140	779	209	677	101	987	99	567	107	773	71	473	400	944	3483
Grand Total	215	876	266	1357	326	1164	180	1670	156	983	166	1305	110	862	673	1645	5977
Apprch %	15.8	64.6	19.6		19.5	69.7	10.8		12	75.3	12.7		6.7	52.4	40.9		
Total %	3.6	14.7	4.5	22.7	5.5	19.5	3	27.9	2.6	16.4	2.8	21.8	1.8	14.4	11.3	27.5	

	TELEGRAPH AVE Southbound				51 st ST Westbound				TELEGRAPH AVE Northbound				51 st ST Eastbound				
Start Time	RT	TH	LT	App. Total	RT	TH	LT	App. Total	RT	TH	LT	App. Total	RT	TH	LT	App. Total	Int. Total
Peak Hour Analysis From 07:00 to 08:45 - Peak 1 of 1																	
Peak Hour for Entire Intersection Begins at 08:00																	
08:00	20	115	**44**	179	51	161	30	242	22	**152**	**34**	**208**	14	**131**	100	**245**	874
08:15	39	129	36	204	**62**	**182**	**31**	**275**	**31**	130	29	190	19	122	99	240	**909**
08:30	**44**	**131**	31	**206**	52	171	19	242	27	144	23	194	**22**	111	92	225	867
08:45	40	121	29	190	44	163	21	228	19	141	21	181	16	109	**109**	234	833
Total Volume	143	496	140	779	209	677	101	987	99	567	107	773	71	473	400	944	3483
% App. Total	18.4	63.7	18		21.2	68.6	10.2		12.8	73.4	13.8		7.5	50.1	42.4		
PHF	.813	.947	.795	.945	.843	.930	.815	.897	.798	.933	.787	.929	.807	.903	.917	.963	.958

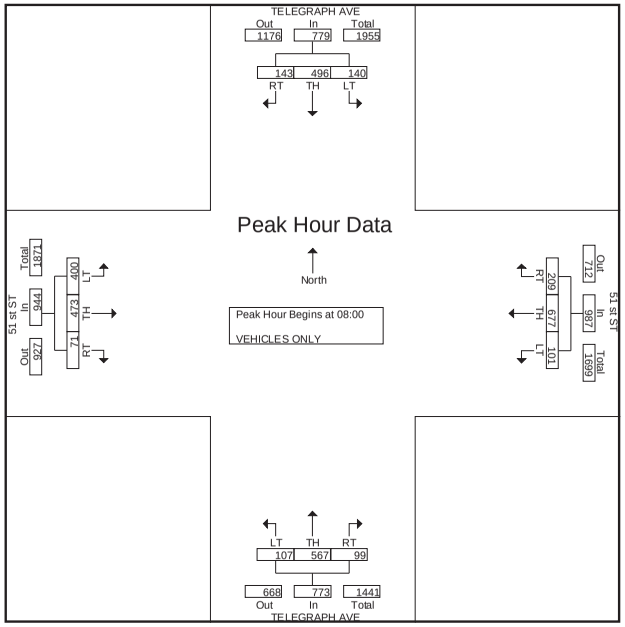

MARKS TRAFFIC DATA

AM 06
OAKLAND
FPW C
TITO [916] 715-4006

File Name : ml-king-47th-a
Site Code : 00000000
Start Date : 5/11/2006
Page No : 1

Groups Printed- VEHICLES ONLY

	M L KING WY Southbound				0 Westbound				M L KING WY Northbound				47TH ST Eastbound				
Start Time	RT	TH	LT	App. Total	RT	TH	LT	App. Total	24 on	TH	LT	App. Total	RT	TH	LT	App. Total	Int. Total
Factor	1.0	1.0	1.0		1.0	1.0	1.0		1.0	1.0	1.0		1.0	1.0	1.0		
07:00	2	39	298	339	0	0	0	0	62	42	1	105	5	0	0	5	449
07:15	6	42	315	363	0	0	0	0	71	57	0	128	0	0	0	0	491
07:30	4	49	332	385	0	0	0	0	89	62	0	151	3	0	0	3	539
07:45	12	53	366	431	0	0	0	0	73	77	2	152	0	0	0	0	583
Total	24	183	1311	1518	0	0	0	0	295	238	3	536	8	0	0	8	2062
08:00	18	62	399	479	0	0	0	0	82	89	0	171	0	0	0	0	650
08:15	22	83	403	508	0	0	0	0	79	91	3	173	1	0	0	1	682
08:30	11	68	415	494	0	0	0	0	62	75	0	137	0	0	0	0	631
08:45	5	52	368	425	0	0	0	0	49	61	4	114	6	0	0	6	545
Total	56	265	1585	1906	0	0	0	0	272	316	7	595	7	0	0	7	2508
Grand Total	80	448	2896	3424	0	0	0	0	567	554	10	1131	15	0	0	15	4570
Apprch %	2.3	13.1	84.6		0	0	0		50.1	49	0.9		100	0	0		
Total %	1.8	9.8	63.4	74.9	0	0	0	0	12.4	12.1	0.2	24.7	0.3	0	0	0.3	

	M L KING WY Southbound				0 Westbound				M L KING WY Northbound				47TH ST Eastbound				
Start Time	RT	TH	LT	App. Total	RT	TH	LT	App. Total	24 on	TH	LT	App. Total	RT	TH	LT	App. Total	Int. Total
Peak Hour Analysis From 07:00 to 08:45 - Peak 1 of 1																	
Peak Hour for Entire Intersection Begins at 07:45																	
07:45	12	53	366	431	0	0	0	0	73	77	2	152	0	0	0	0	583
08:00	18	62	399	479	0	0	0	0	**82**	89	0	171	0	0	0	0	650
08:15	**22**	**83**	403	**508**	0	0	0	0	79	**91**	**3**	**173**	**1**	0	0	**1**	**682**
08:30	11	68	**415**	494	0	0	0	0	62	75	0	137	0	0	0	0	631
Total Volume	63	266	1583	1912	0	0	0	0	296	332	5	633	1	0	0	1	2546
% App. Total	3.3	13.9	82.8		0	0	0		46.8	52.4	0.8		100	0	0		
PHF	.716	.801	.954	.941	.000	.000	.000	.000	.902	.912	.417	.915	.250	.000	.000	.250	.933

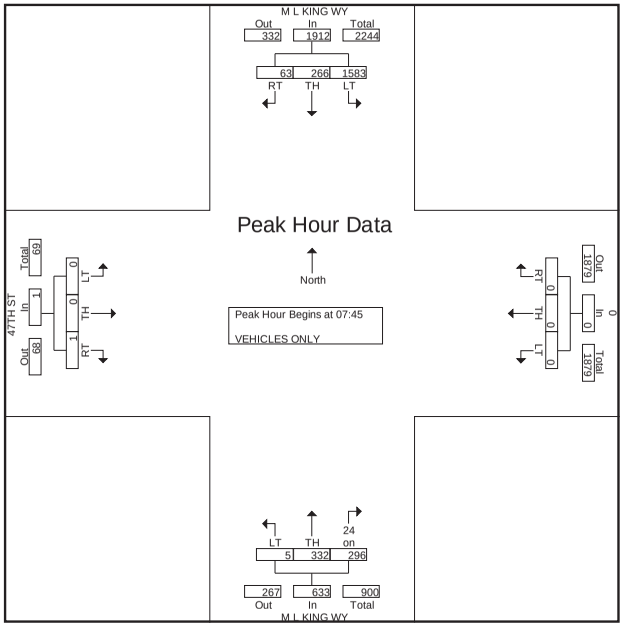

MARKS TRAFFIC DATA

AM 07
OAKLAND
FPW A
TITO [916] 715-4006

File Name : ml-king-45th-a
Site Code : 00000000
Start Date : 5/16/2006
Page No : 1

Groups Printed- VEHICLES ONLY

	M L KING WY Southbound				45 th ST Westbound				M L KING WY Northbound				45 th ST Eastbound				
Start Time	RT	TH	LT	App. Total	RT	TH	LT	App. Total	RT	TH	LT	App. Total	RT	TH	LT	App. Total	Int. Total
Factor	1.0	1.0	1.0		1.0	1.0	1.0		1.0	1.0	1.0		1.0	1.0	1.0		
07:00	7	69	3	79	4	9	8	21	3	39	1	43	0	6	2	8	151
07:15	3	81	9	93	2	11	12	25	8	49	1	58	4	6	6	16	192
07:30	6	77	11	94	7	8	8	23	12	52	5	69	5	8	9	22	208
07:45	7	89	7	103	9	15	9	33	9	59	5	73	10	12	13	35	244
Total	23	316	30	369	22	43	37	102	32	199	12	243	19	32	30	81	795
08:00	10	97	11	118	11	17	14	42	18	74	8	100	10	14	11	35	295
08:15	6	108	12	126	15	12	18	45	23	78	8	109	7	16	15	38	318
08:30	7	115	10	132	12	9	10	31	19	69	3	91	3	11	10	24	278
08:45	5	99	8	112	9	6	9	24	20	64	4	88	3	9	8	20	244
Total	28	419	41	488	47	44	51	142	80	285	23	388	23	50	44	117	1135
Grand Total	51	735	71	857	69	87	88	244	112	484	35	631	42	82	74	198	1930
Apprch %	6	85.8	8.3		28.3	35.7	36.1		17.7	76.7	5.5		21.2	41.4	37.4		
Total %	2.6	38.1	3.7	44.4	3.6	4.5	4.6	12.6	5.8	25.1	1.8	32.7	2.2	4.2	3.8	10.3	

	M L KING WY Southbound				45 th ST Westbound				M L KING WY Northbound				45 th ST Eastbound				
Start Time	RT	TH	LT	App. Total	RT	TH	LT	App. Total	RT	TH	LT	App. Total	RT	TH	LT	App. Total	Int. Total
Peak Hour Analysis From 07:00 to 08:45 - Peak 1 of 1																	
Peak Hour for Entire Intersection Begins at 07:45																	
07:45	7	89	7	103	9	15	9	33	9	59	5	73	**10**	12	13	35	244
08:00	**10**	97	11	118	11	**17**	14	42	18	74	**8**	100	10	14	11	35	295
08:15	6	108	**12**	126	**15**	12	**18**	**45**	**23**	**78**	8	**109**	7	**16**	**15**	**38**	**318**
08:30	7	**115**	10	**132**	12	9	10	31	19	69	3	91	3	11	10	24	278
Total Volume	30	409	40	479	47	53	51	151	69	280	24	373	30	53	49	132	1135
% App. Total	6.3	85.4	8.4		31.1	35.1	33.8		18.5	75.1	6.4		22.7	40.2	37.1		
PHF	.750	.889	.833	.907	.783	.779	.708	.839	.750	.897	.750	.856	.750	.828	.817	.868	.892

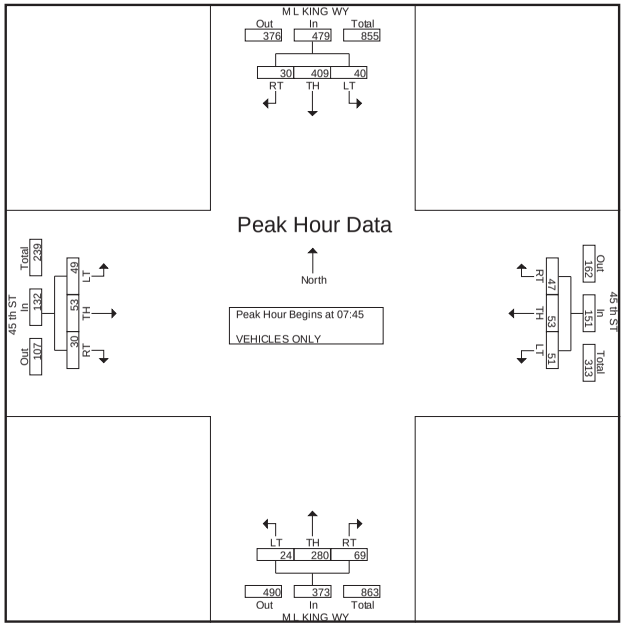

MARKS TRAFFIC DATA

AM 08
OAKLAND
FPW A
TITO [916] 715-4006

File Name : telegraph-45th-a
Site Code : 00000000
Start Date : 5/11/2006
Page No : 1

Groups Printed- VEHICLES ONLY

	TELEGRAPH AVE Southbound				45TH ST Westbound				TELEGRAPH AVE Northbound				45TH ST Eastbound				
Start Time	RT	TH	LT	App. Total	RT	TH	LT	App. Total	RT	TH	LT	App. Total	RT	TH	LT	App. Total	Int. Total
Factor	1.0	1.0	1.0		1.0	1.0	1.0		1.0	1.0	1.0		1.0	1.0	1.0		
07:00	8	132	7	147	3	4	1	8	2	139	4	145	8	3	3	14	314
07:15	11	152	7	170	6	8	1	15	7	163	2	172	7	8	7	22	379
07:30	13	172	3	188	7	8	2	17	6	182	3	191	11	6	6	23	419
07:45	8	198	4	210	9	9	4	22	9	197	5	211	10	9	8	27	470
Total	40	654	21	715	25	29	8	62	24	681	14	719	36	26	24	86	1582
08:00	17	211	7	235	9	11	3	23	12	221	4	237	10	12	12	34	529
08:15	18	238	3	259	10	14	8	32	15	241	7	263	12	16	9	37	591
08:30	24	268	50	342	6	17	10	33	8	239	8	255	14	21	15	50	680
08:45	24	249	1	274	11	15	5	31	10	209	3	222	16	25	15	56	583
Total	83	966	61	1110	36	57	26	119	45	910	22	977	52	74	51	177	2383
Grand Total	123	1620	82	1825	61	86	34	181	69	1591	36	1696	88	100	75	263	3965
Apprch %	6.7	88.8	4.5		33.7	47.5	18.8		4.1	93.8	2.1		33.5	38	28.5		
Total %	3.1	40.9	2.1	46	1.5	2.2	0.9	4.6	1.7	40.1	0.9	42.8	2.2	2.5	1.9	6.6	

	TELEGRAPH AVE Southbound				45TH ST Westbound				TELEGRAPH AVE Northbound				45TH ST Eastbound				
Start Time	RT	TH	LT	App. Total	RT	TH	LT	App. Total	RT	TH	LT	App. Total	RT	TH	LT	App. Total	Int. Total
Peak Hour Analysis From 07:00 to 08:45 - Peak 1 of 1																	
Peak Hour for Entire Intersection Begins at 08:00																	
08:00	17	211	7	235	9	11	3	23	12	221	4	237	10	12	12	34	529
08:15	18	238	3	259	10	14	8	32	**15**	**241**	7	**263**	12	16	9	37	591
08:30	**24**	**268**	**50**	**342**	6	**17**	**10**	**33**	8	239	**8**	255	14	21	**15**	50	**680**
08:45	24	249	1	274	**11**	15	5	31	10	209	3	222	**16**	**25**	15	**56**	583
Total Volume	83	966	61	1110	36	57	26	119	45	910	22	977	52	74	51	177	2383
% App. Total	7.5	87	5.5		30.3	47.9	21.8		4.6	93.1	2.3		29.4	41.8	28.8		
PHF	.865	.901	.305	.811	.818	.838	.650	.902	.750	.944	.688	.929	.813	.740	.850	.790	.876

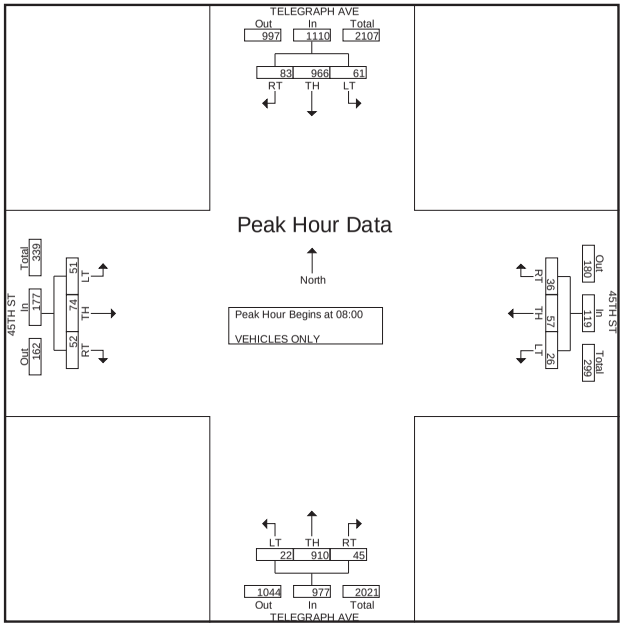

MARKS TRAFFIC DATA

AM 09
OAKLAND
FPW J
TITO [916] 715-4006

File Name : market-40th-a2
Site Code : 00000000
Start Date : 5/9/2006
Page No : 1

Groups Printed- VEHICLES ONLY

	MARKET ST Southbound				40 TH ST Westbound				MARKET ST Northbound				40 TH ST Eastbound				
Start Time	RT	TH	LT	App. Total	RT	TH	LT	App. Total	RT	TH	LT	App. Total	RT	TH	LT	App. Total	Int. Total
Factor	1.0	1.0	1.0		1.0	1.0	1.0		1.0	1.0	1.0		1.0	1.0	1.0		
07:00	0	19	11	30	0	39	1	40	5	22	14	41	3	35	0	38	149
07:15	5	20	20	45	2	50	0	52	5	31	9	45	2	54	4	60	202
07:30	3	34	13	50	1	61	3	65	1	31	13	45	6	36	7	49	209
07:45	2	34	14	50	6	116	2	124	6	38	18	62	7	86	4	97	333
Total	10	107	58	175	9	266	6	281	17	122	54	193	18	211	15	244	893
08:00	3	50	25	78	11	93	8	112	6	37	21	64	9	72	0	81	335
08:15	4	67	16	87	7	104	10	121	3	48	21	72	10	84	8	102	382
08:30	3	35	21	59	12	107	1	120	8	44	24	76	9	54	5	68	323
08:45	5	35	23	63	9	133	6	148	6	30	16	52	7	81	6	94	357
Total	15	187	85	287	39	437	25	501	23	159	82	264	35	291	19	345	1397
Grand Total	25	294	143	462	48	703	31	782	40	281	136	457	53	502	34	589	2290
Apprch %	5.4	63.6	31		6.1	89.9	4		8.8	61.5	29.8		9	85.2	5.8		
Total %	1.1	12.8	6.2	20.2	2.1	30.7	1.4	34.1	1.7	12.3	5.9	20	2.3	21.9	1.5	25.7	

	MARKET ST Southbound				40 TH ST Westbound				MARKET ST Northbound				40 TH ST Eastbound				
Start Time	RT	TH	LT	App. Total	RT	TH	LT	App. Total	RT	TH	LT	App. Total	RT	TH	LT	App. Total	Int. Total
Peak Hour Analysis From 07:00 to 08:45 - Peak 1 of 1																	
Peak Hour for Entire Intersection Begins at 08:00																	
08:00	3	50	**25**	78	11	93	8	112	6	37	21	64	9	72	0	81	335
08:15	4	**67**	16	**87**	7	104	**10**	121	3	**48**	21	72	**10**	**84**	**8**	**102**	**382**
08:30	3	35	21	59	**12**	107	1	120	**8**	44	**24**	**76**	9	54	5	68	323
08:45	**5**	35	23	63	9	**133**	6	**148**	6	30	16	52	7	81	6	94	357
Total Volume	15	187	85	287	39	437	25	501	23	159	82	264	35	291	19	345	1397
% App. Total	5.2	65.2	29.6		7.8	87.2	5		8.7	60.2	31.1		10.1	84.3	5.5		
PHF	.750	.698	.850	.825	.813	.821	.625	.846	.719	.828	.854	.868	.875	.866	.594	.846	.914

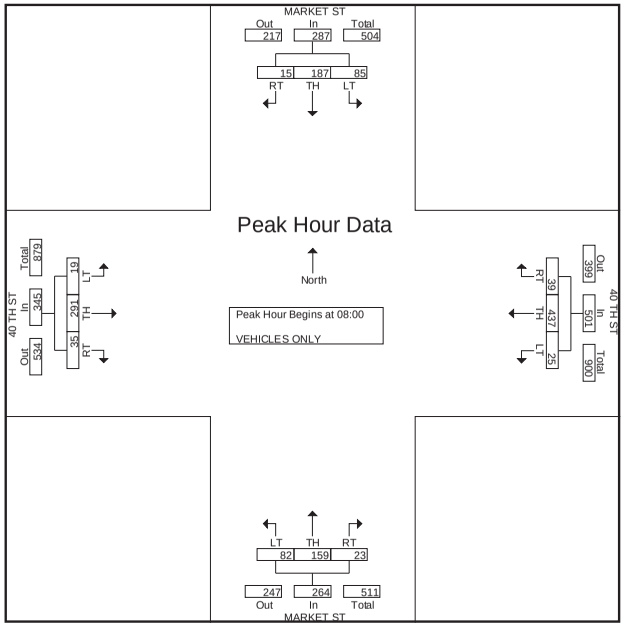

MARKS TRAFFIC DATA

AM 10
OAKLAND
FPW H
TITO [916] 715-4006

File Name : west-40th-a
Site Code : 00000000
Start Date : 5/9/2006
Page No : 1

Groups Printed- VEHICLES ONLY

	WEST ST Southbound				40TH ST Westbound				WEST ST Northbound				40TH ST Eastbound				
Start Time	RT	TH	LT	App. Total	RT	TH	LT	App. Total	RT	TH	LT	App. Total	RT	TH	LT	App. Total	Int. Total
Factor	1.0	1.0	1.0		1.0	1.0	1.0		1.0	1.0	1.0		1.0	1.0	1.0		
07:00	4	8	3	15	0	40	0	40	4	11	4	19	4	52	2	58	132
07:15	4	6	3	13	1	47	1	49	9	7	8	24	5	68	1	74	160
07:30	8	7	2	17	0	59	4	63	5	12	10	27	7	46	4	57	164
07:45	8	12	5	25	2	94	2	98	8	16	19	43	8	90	7	105	271
Total	24	33	13	70	3	240	7	250	26	46	41	113	24	256	14	294	727
08:00	5	14	5	24	6	93	7	106	11	34	10	55	12	89	5	106	291
08:15	7	23	2	32	2	106	3	111	11	24	15	50	12	92	6	110	303
08:30	6	14	6	26	4	104	7	115	7	20	22	49	13	80	2	95	285
08:45	7	15	3	25	2	126	1	129	12	22	14	48	11	100	2	113	315
Total	25	66	16	107	14	429	18	461	41	100	61	202	48	361	15	424	1194
Grand Total	49	99	29	177	17	669	25	711	67	146	102	315	72	617	29	718	1921
Apprch %	27.7	55.9	16.4		2.4	94.1	3.5		21.3	46.3	32.4		10	85.9	4		
Total %	2.6	5.2	1.5	9.2	0.9	34.8	1.3	37	3.5	7.6	5.3	16.4	3.7	32.1	1.5	37.4	

	WEST ST Southbound				40TH ST Westbound				WEST ST Northbound				40TH ST Eastbound				
Start Time	RT	TH	LT	App. Total	RT	TH	LT	App. Total	RT	TH	LT	App. Total	RT	TH	LT	App. Total	Int. Total
Peak Hour Analysis From 07:00 to 08:45 - Peak 1 of 1																	
Peak Hour for Entire Intersection Begins at 08:00																	
08:00	5	14	5	24	**6**	93	**7**	106	11	**34**	10	**55**	12	89	5	106	291
08:15	**7**	**23**	2	**32**	2	106	3	111	11	24	15	50	12	92	**6**	110	303
08:30	6	14	**6**	26	4	104	7	115	7	20	**22**	49	**13**	80	2	95	285
08:45	7	15	3	25	2	**126**	1	**129**	**12**	22	14	48	11	**100**	2	**113**	**315**
Total Volume	25	66	16	107	14	429	18	461	41	100	61	202	48	361	15	424	1194
% App. Total	23.4	61.7	15		3	93.1	3.9		20.3	49.5	30.2		11.3	85.1	3.5		
PHF	.893	.717	.667	.836	.583	.851	.643	.893	.854	.735	.693	.918	.923	.903	.625	.938	.948

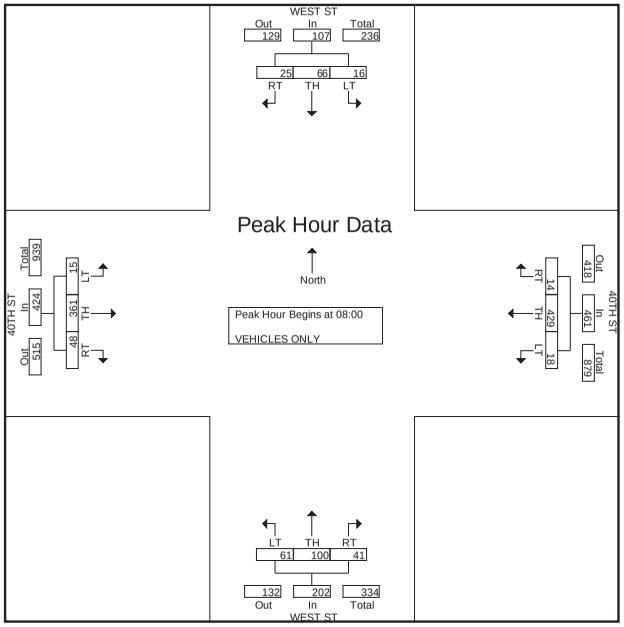

MARKS TRAFFIC DATA

AM 11
OAKLAND
FPW T
TITO [916] 715-4006

File Name : ml-king-40th-a
Site Code : 00000000
Start Date : 5/10/2006
Page No : 1

Groups Printed- VEHICLES ONLY

	M LUTHER KING WY Southbound				40 th ST Westbound				M LUTHER KING WY Northbound				40 th ST Eastbound				
Start Time	RT	TH	LT	App. Total	RT	TH	LT	App. Total	RT	TH	LT	App. Total	RT	TH	LT	App. Total	Int. Total
07:00	0	11	15	26	7	32	10	49	11	17	2	30	0	49	4	53	158
07:15	2	23	14	39	7	24	6	37	17	29	7	53	5	52	7	64	193
07:30	4	19	14	37	15	40	2	57	18	32	5	55	1	63	5	69	218
07:45	3	23	18	44	13	80	4	97	17	39	7	63	5	66	6	77	281
Total	9	76	61	146	42	176	22	240	63	117	21	201	11	230	22	263	850
08:00	2	25	18	45	7	45	13	65	19	54	9	82	8	77	13	98	290
08:15	4	35	14	53	12	67	17	96	19	35	8	62	7	99	8	114	325
08:30	4	26	20	50	11	106	7	124	9	34	9	52	5	98	6	109	335
08:45	9	46	19	74	16	78	6	100	22	33	5	60	2	95	4	101	335
Total	19	132	71	222	46	296	43	385	69	156	31	256	22	369	31	422	1285
Grand Total	28	208	132	368	88	472	65	625	132	273	52	457	33	599	53	685	2135
Apprch %	7.6	56.5	35.9		14.1	75.5	10.4		28.9	59.7	11.4		4.8	87.4	7.7		
Total %	1.3	9.7	6.2	17.2	4.1	22.1	3	29.3	6.2	12.8	2.4	21.4	1.5	28.1	2.5	32.1	

	M LUTHER KING WY Southbound				40 th ST Westbound				M LUTHER KING WY Northbound				40 th ST Eastbound				
Start Time	RT	TH	LT	App. Total	RT	TH	LT	App. Total	RT	TH	LT	App. Total	RT	TH	LT	App. Total	Int. Total
Peak Hour Analysis From 07:00 to 08:45 - Peak 1 of 1																	
Peak Hour for Entire Intersection Begins at 08:00																	
08:00	2	25	18	45	7	45	13	65	19	**54**	**9**	**82**	**8**	77	**13**	98	290
08:15	4	35	14	53	12	67	**17**	96	19	35	8	62	7	**99**	8	**114**	325
08:30	4	26	**20**	50	11	**106**	7	**124**	9	34	9	52	5	98	6	109	**335**
08:45	**9**	**46**	19	**74**	**16**	78	6	100	**22**	33	5	60	2	95	4	101	335
Total Volume	19	132	71	222	46	296	43	385	69	156	31	256	22	369	31	422	1285
% App. Total	8.6	59.5	32		11.9	76.9	11.2		27	60.9	12.1		5.2	87.4	7.3		
PHF	.528	.717	.888	.750	.719	.698	.632	.776	.784	.722	.861	.780	.688	.932	.596	.925	.959

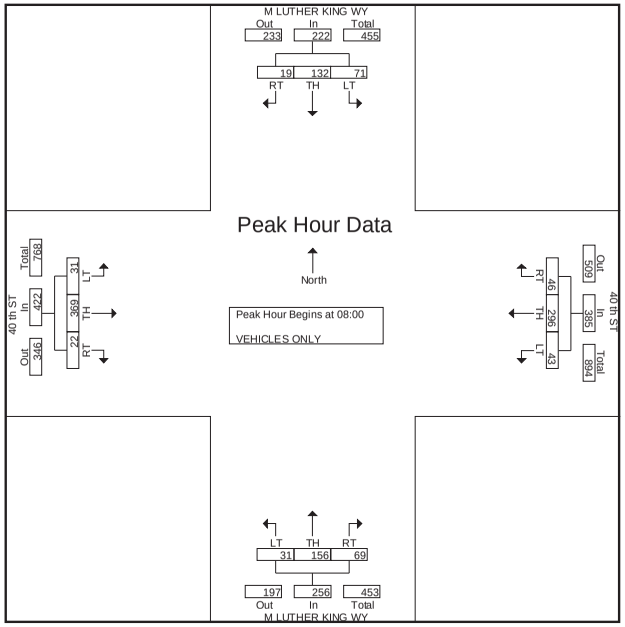

MARKS TRAFFIC DATA

AM 12
OAKLAND
FPW L
TITO [916] 715-4006

File Name : dw12-40th-a
Site Code : 00000000
Start Date : 5/10/2006
Page No : 1

Groups Printed- VEHICLES ONLY

	40TH ST Southbound				0 Westbound				40TH ST Northbound				0 Eastbound				
Start Time	RT	TH	LT	App. Total	RT	TH	LT	App. Total	RT	TH	LT	App. Total	RT	TH	LT	App. Total	Int. Total
07:00	0	0	0	0	0	52	16	68	0	0	0	0	14	62	1	77	145
07:15	0	0	0	0	0	50	20	70	0	0	0	0	16	60	2	78	148
07:30	0	0	0	0	0	60	22	82	0	0	0	0	16	70	2	88	170
07:45	0	0	0	0	0	99	28	127	0	0	0	0	17	82	2	101	228
Total	0	0	0	0	0	261	86	347	0	0	0	0	63	274	7	344	691
08:00	0	0	0	0	0	71	34	105	0	0	0	0	16	92	4	112	217
08:15	0	0	0	0	0	98	27	125	0	0	0	0	15	104	5	124	249
08:30	0	0	0	0	0	125	14	139	0	0	0	0	20	115	3	138	277
08:45	0	0	0	0	0	105	26	131	0	0	0	0	8	122	3	133	264
Total	0	0	0	0	0	399	101	500	0	0	0	0	59	433	15	507	1007
Grand Total	0	0	0	0	0	660	187	847	0	0	0	0	122	707	22	851	1698
Apprch %	0	0	0		0	77.9	22.1		0	0	0		14.3	83.1	2.6		
Total %	0	0	0	0	0	38.9	11	49.9	0	0	0	0	7.2	41.6	1.3	50.1	

	40TH ST Southbound				0 Westbound				40TH ST Northbound				0 Eastbound				
Start Time	RT	TH	LT	App. Total	RT	TH	LT	App. Total	RT	TH	LT	App. Total	RT	TH	LT	App. Total	Int. Total
Peak Hour Analysis From 07:00 to 08:45 - Peak 1 of 1																	
Peak Hour for Entire Intersection Begins at 08:00																	
08:00	0	0	0	0	0	71	**34**	105	0	0	0	0	16	92	4	112	217
08:15	0	0	0	0	0	98	27	125	0	0	0	0	15	104	**5**	124	249
08:30	0	0	0	0	0	**125**	14	**139**	0	0	0	0	**20**	115	3	**138**	**277**
08:45	0	0	0	0	0	105	26	131	0	0	0	0	8	**122**	3	133	264
Total Volume	0	0	0	0	0	399	101	500	0	0	0	0	59	433	15	507	1007
% App. Total	0	0	0		0	79.8	20.2		0	0	0		11.6	85.4	3		
PHF	.000	.000	.000	.000	.000	.798	.743	.899	.000	.000	.000	.000	.738	.887	.750	.918	.909

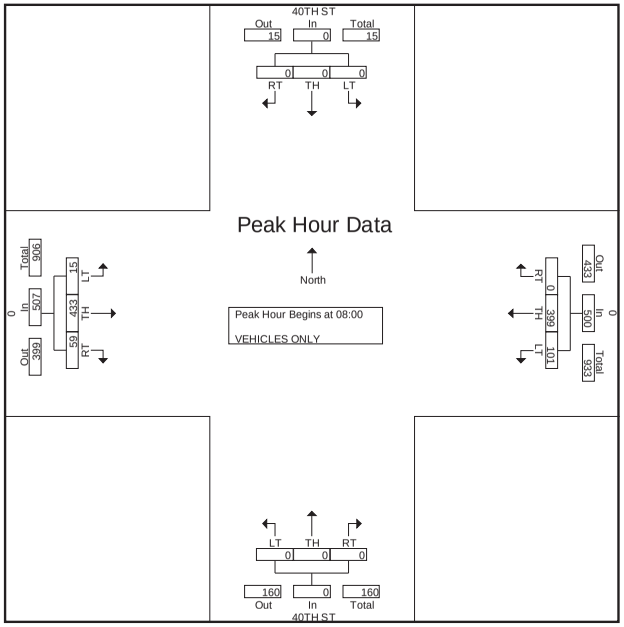

MARKS TRAFFIC DATA

AM 13
OAKLAND
FPW C
TITO [916] 715-4006

File Name : dw13-40th-a
Site Code : 00000000
Start Date : 5/10/2006
Page No : 1

Groups Printed- VEHICLES ONLY

	0 Southbound				40 th ST Westbound				0 Northbound				40 th ST Eastbound				
Start Time	RT	TH	LT	App. Total	RT	TH	LT	App. Total	RT	TH	LT	App. Total	RT	TH	LT	App. Total	Int. Total
Factor	1.0	1.0	1.0		1.0	1.0	1.0		1.0	1.0	1.0		1.0	1.0	1.0		
07:00	0	0	0	0	0	65	0	65	2	0	0	2	11	57	0	68	135
07:15	0	0	0	0	0	65	0	65	4	0	0	4	18	43	0	61	130
07:30	0	0	0	0	0	80	0	80	7	0	0	7	9	67	0	76	163
07:45	0	0	0	0	0	125	0	125	2	0	0	2	16	68	0	84	211
Total	0	0	0	0	0	335	0	335	15	0	0	15	54	235	0	289	639
08:00	0	0	0	0	0	105	0	105	4	0	0	4	7	88	0	95	204
08:15	0	0	0	0	0	130	0	130	3	0	0	3	2	103	0	105	238
08:30	0	0	0	0	0	133	0	133	5	0	0	5	0	117	0	117	255
08:45	0	0	0	0	0	129	0	129	6	0	0	6	4	119	0	123	258
Total	0	0	0	0	0	497	0	497	18	0	0	18	13	427	0	440	955
Grand Total	0	0	0	0	0	832	0	832	33	0	0	33	67	662	0	729	1594
Apprch %	0	0	0		0	100	0		100	0	0		9.2	90.8	0		
Total %	0	0	0	0	0	52.2	0	52.2	2.1	0	0	2.1	4.2	41.5	0	45.7	

	0 Southbound				40 th ST Westbound				0 Northbound				40 th ST Eastbound				
Start Time	RT	TH	LT	App. Total	RT	TH	LT	App. Total	RT	TH	LT	App. Total	RT	TH	LT	App. Total	Int. Total
Peak Hour Analysis From 07:00 to 08:45 - Peak 1 of 1																	
Peak Hour for Entire Intersection Begins at 08:00																	
08:00	0	0	0	0	0	105	0	105	4	0	0	4	**7**	88	0	95	204
08:15	0	0	0	0	0	130	0	130	3	0	0	3	2	103	0	105	238
08:30	0	0	0	0	0	**133**	0	**133**	5	0	0	5	0	117	0	117	255
08:45	0	0	0	0	0	129	0	129	**6**	0	0	**6**	4	**119**	0	**123**	**258**
Total Volume	0	0	0	0	0	497	0	497	18	0	0	18	13	427	0	440	955
% App. Total	0	0	0		0	100	0		100	0	0		3	97	0		
PHF	.000	.000	.000	.000	.000	.934	.000	.934	.750	.000	.000	.750	.464	.897	.000	.894	.925

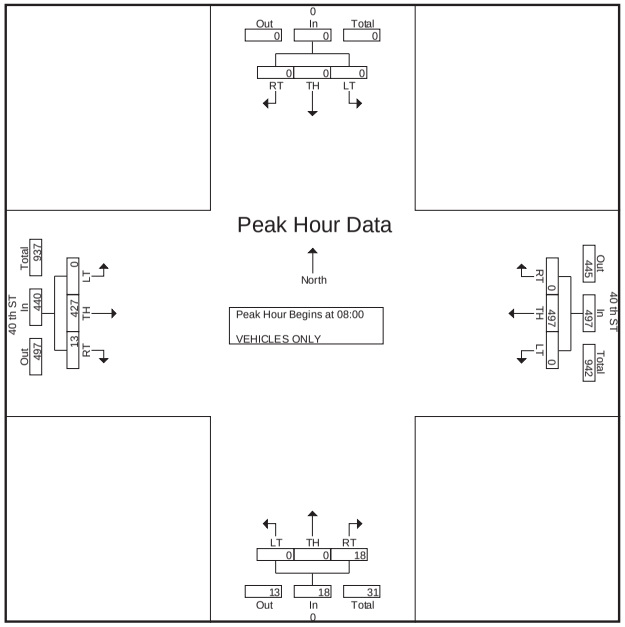

MARKS TRAFFIC DATA

AM 14
OAKLAND
FPW A
TITO [916] 715-4006

File Name : dw-14-40th-a
Site Code : 00000000
Start Date : 5/10/2006
Page No : 1

Groups Printed- VEHICLES ONLY

	0 Southbound				40 th ST Westbound				0 Northbound				40 th ST Eastbound				
Start Time	RT	TH	LT	App. Total	RT	TH	LT	App. Total	RT	TH	LT	App. Total	RT	TH	LT	App. Total	Int. Total
Factor	1.0	1.0	1.0		1.0	1.0	1.0		1.0	1.0	1.0		1.0	1.0	1.0		
07:00	0	0	0	0	0	62	0	62	2	0	0	2	0	68	0	68	132
07:15	0	0	0	0	0	57	0	57	7	0	0	7	0	75	0	75	139
07:30	0	0	0	0	0	86	0	86	7	0	0	7	0	81	0	81	174
07:45	0	0	0	0	0	121	0	121	5	0	0	5	0	103	0	103	229
Total	0	0	0	0	0	326	0	326	21	0	0	21	0	327	0	327	674
08:00	0	0	0	0	0	107	0	107	15	0	0	15	1	113	0	114	236
08:15	0	0	0	0	1	128	0	129	6	0	0	6	1	108	0	109	244
08:30	0	0	0	0	0	129	0	129	17	0	0	17	1	105	0	106	252
08:45	0	0	0	0	0	129	0	129	16	0	0	16	0	95	0	95	240
Total	0	0	0	0	1	493	0	494	54	0	0	54	3	421	0	424	972
Grand Total	0	0	0	0	1	819	0	820	75	0	0	75	3	748	0	751	1646
Apprch %	0	0	0		0.1	99.9	0		100	0	0		0.4	99.6	0		
Total %	0	0	0	0	0.1	49.8	0	49.8	4.6	0	0	4.6	0.2	45.4	0	45.6	

	0 Southbound				40 th ST Westbound				0 Northbound				40 th ST Eastbound				
Start Time	RT	TH	LT	App. Total	RT	TH	LT	App. Total	RT	TH	LT	App. Total	RT	TH	LT	App. Total	Int. Total
Peak Hour Analysis From 07:00 to 08:45 - Peak 1 of 1																	
Peak Hour for Entire Intersection Begins at 08:00																	
08:00	0	0	0	0	0	107	0	107	15	0	0	15	**1**	**113**	0	**114**	236
08:15	0	0	0	0	**1**	128	0	**129**	6	0	0	6	1	108	0	109	244
08:30	0	0	0	0	0	**129**	0	129	**17**	0	0	**17**	1	105	0	106	**252**
08:45	0	0	0	0	0	129	0	129	16	0	0	16	0	95	0	95	240
Total Volume	0	0	0	0	1	493	0	494	54	0	0	54	3	421	0	424	972
% App. Total	0	0	0		0.2	99.8	0		100	0	0		0.7	99.3	0		
PHF	.000	.000	.000	.000	.250	.955	.000	.957	.794	.000	.000	.794	.750	.931	.000	.930	.964

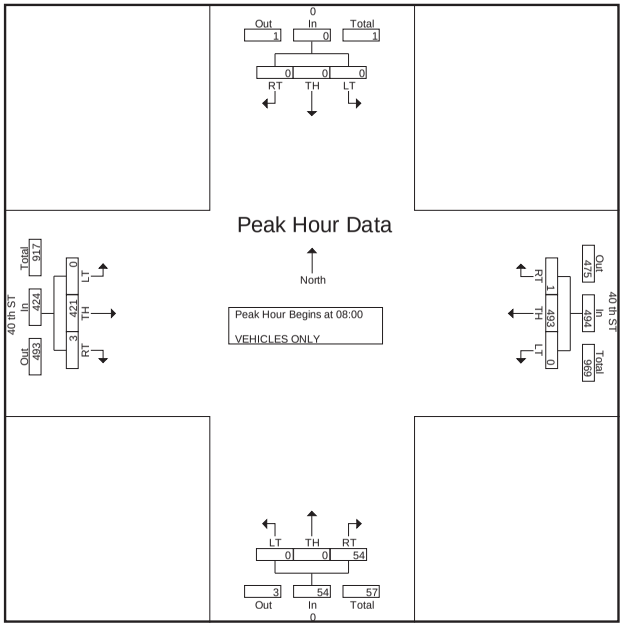

MARKS TRAFFIC DATA

CITY OF OAKLAND
FP
AM 15

File Name : telegraph-40-a
Site Code : 15
Start Date : 5/10/2006
Page No : 1

Groups Printed- Vehicles only

	TELEGRAPH AV. Southbound				40th ST. Westbound				TELEGRAPH AV. Northbound				40th ST. Eastbound				
Start Time	RT	TH	LT	App. Total	RT	TH	LT	App. Total	RT	TH	LT	App. Total	RT	TH	LT	App. Total	Int. Total
07:00	19	58	9	86	7	35	16	58	4	55	19	78	11	32	12	55	277
07:15	18	75	10	103	8	35	6	49	6	63	10	79	10	39	15	64	295
07:30	17	85	12	114	10	72	6	88	5	70	20	95	11	52	16	79	376
07:45	28	110	21	159	18	67	6	91	4	63	22	89	15	54	22	91	430
Total	82	328	52	462	43	209	34	286	19	251	71	341	47	177	65	289	1378
08:00	30	91	23	144	10	81	12	103	6	83	18	107	17	63	22	102	456
08:15	31	135	21	187	11	89	8	108	7	105	19	131	17	78	13	108	534
08:30	42	138	19	199	19	89	15	123	10	87	15	112	16	70	22	108	542
08:45	41	143	15	199	24	92	8	124	10	100	28	138	22	92	17	131	592
Total	144	507	78	729	64	351	43	458	33	375	80	488	72	303	74	449	2124
Grand Total	226	835	130	1191	107	560	77	744	52	626	151	829	119	480	139	738	3502
Apprch %	19	70.1	10.9		14.4	75.3	10.3		6.3	75.5	18.2		16.1	65	18.8		
Total %	6.5	23.8	3.7	34	3.1	16	2.2	21.2	1.5	17.9	4.3	23.7	3.4	13.7	4	21.1	

	TELEGRAPH AV. Southbound				40th ST. Westbound				TELEGRAPH AV. Northbound				40th ST. Eastbound				
Start Time	RT	TH	LT	App. Total	RT	TH	LT	App. Total	RT	TH	LT	App. Total	RT	TH	LT	App. Total	Int. Total
Peak Hour Analysis From 07:00 to 08:45 - Peak 1 of 1																	
Peak Hour for Entire Intersection Begins at 08:00																	
08:00	30	91	**23**	144	10	81	12	103	6	83	18	107	17	63	**22**	102	456
08:15	31	135	21	187	11	89	8	108	7	**105**	19	131	17	78	13	108	534
08:30	**42**	138	19	**199**	19	89	**15**	123	**10**	87	15	112	16	70	22	108	542
08:45	41	**143**	15	199	**24**	**92**	8	**124**	10	100	**28**	**138**	**22**	**92**	17	**131**	**592**
Total Volume	144	507	78	729	64	351	43	458	33	375	80	488	72	303	74	449	2124
% App. Total	19.8	69.5	10.7		14	76.6	9.4		6.8	76.8	16.4		16	67.5	16.5		
PHF	.857	.886	.848	.916	.667	.954	.717	.923	.825	.893	.714	.884	.818	.823	.841	.857	.897

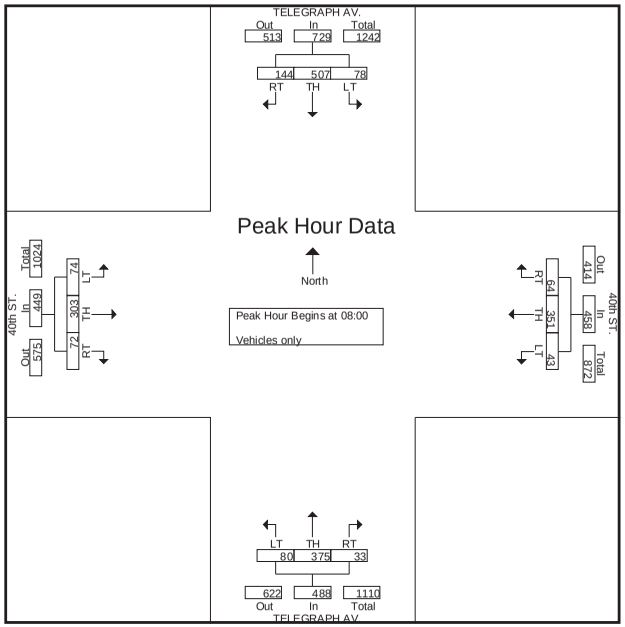

MARKS TRAFFIC DATA

AM 17
OAKLAND
FPW J
TITO [916] 715-4006

File Name : tlegraph-bart-s-a
Site Code : 00000000
Start Date : 5/10/2006
Page No : 1

Groups Printed- VEHICLES ONLY

	TELEGRAPH AVE Southbound				0 Westbound				TELEGRAPH AVE Northbound				BART PARKING ABCESS Eastbound				
Start Time	RT	TH	LT	App. Total	RT	TH	LT	App. Total	RT	TH	LT	App. Total	RT	TH	LT	App. Total	Int. Total
Factor	1.0	1.0	1.0		1.0	1.0	1.0		1.0	1.0	1.0		1.0	1.0	1.0		
07:00	16	66	0	82	0	0	0	0	0	78	31	109	0	0	0	0	191
07:15	8	66	0	74	0	0	0	0	0	75	17	92	2	0	1	3	169
07:30	11	88	0	99	0	0	0	0	0	87	19	106	0	0	0	0	205
07:45	8	122	0	130	0	0	0	0	0	82	17	99	2	0	0	2	231
Total	43	342	0	385	0	0	0	0	0	322	84	406	4	0	1	5	796
08:00	11	104	0	115	0	0	0	0	0	107	13	120	6	0	2	8	243
08:15	5	155	0	160	0	0	0	0	0	141	15	156	5	0	1	6	322
08:30	7	157	0	164	0	0	0	0	0	97	9	106	3	0	1	4	274
08:45	4	169	0	173	0	0	0	0	0	148	4	152	2	0	1	3	328
Total	27	585	0	612	0	0	0	0	0	493	41	534	16	0	5	21	1167
Grand Total	70	927	0	997	0	0	0	0	0	815	125	940	20	0	6	26	1963
Apprch %	7	93	0		0	0	0		0	86.7	13.3		76.9	0	23.1		
Total %	3.6	47.2	0	50.8	0	0	0	0	0	41.5	6.4	47.9	1	0	0.3	1.3	

	TELEGRAPH AVE Southbound				0 Westbound				TELEGRAPH AVE Northbound				BART PARKING ABCESS Eastbound				
Start Time	RT	TH	LT	App. Total	RT	TH	LT	App. Total	RT	TH	LT	App. Total	RT	TH	LT	App. Total	Int. Total
Peak Hour Analysis From 07:00 to 08:45 - Peak 1 of 1																	
Peak Hour for Entire Intersection Begins at 08:00																	
08:00	**11**	104	0	115	0	0	0	0	0	107	13	120	**6**	0	**2**	**8**	243
08:15	5	155	0	160	0	0	0	0	0	141	**15**	**156**	5	0	1	6	322
08:30	7	157	0	164	0	0	0	0	0	97	9	106	3	0	1	4	274
08:45	4	**169**	0	**173**	0	0	0	0	0	**148**	4	152	2	0	1	3	**328**
Total Volume	27	585	0	612	0	0	0	0	0	493	41	534	16	0	5	21	1167
% App. Total	4.4	95.6	0		0	0	0		0	92.3	7.7		76.2	0	23.8		
PHF	.614	.865	.000	.884	.000	.000	.000	.000	.000	.833	.683	.856	.667	.000	.625	.656	.889

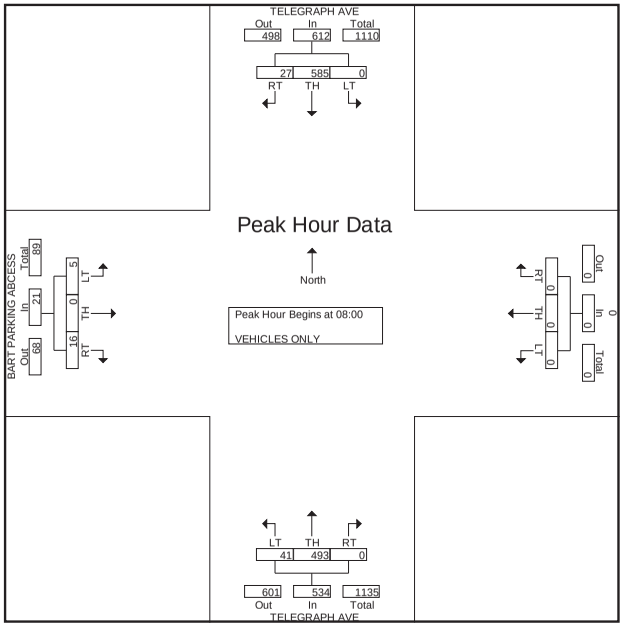

MARKS TRAFFIC DATA

AM 18
OAKLAND
FPW H
TITO [916] 715 - 4006

File Name : e-telegraph-38th-a
Site Code : 00000000
Start Date : 5/10/2006
Page No : 1

Groups Printed- ONLY

	TELEGRAPH AV Southbound				38 th ST Westbound				TELEGRAPH AV Northbound				0 Eastbound				
Start Time	RT	TH	LT	App. Total	RT	TH	LT	App. Total	RT	TH	LT	App. Total	RT	TH	LT	App. Total	Int. Total
07:00	0	58	2	60	3	0	1	4	5	113	0	118	0	0	0	0	182
07:15	0	68	1	69	4	0	1	5	0	87	0	87	0	0	0	0	161
07:30	0	91	3	94	11	0	1	12	4	96	0	100	0	0	0	0	206
07:45	0	114	6	120	9	0	2	11	6	91	0	97	0	0	0	0	228
Total	0	331	12	343	27	0	5	32	15	387	0	402	0	0	0	0	777
08:00	0	110	3	113	8	0	1	9	0	117	0	117	0	0	0	0	239
08:15	0	154	6	160	12	0	3	15	1	151	0	152	0	0	0	0	327
08:30	0	155	2	157	8	0	2	10	5	104	0	109	0	0	0	0	276
08:45	0	164	4	168	6	0	5	11	3	153	0	156	0	0	0	0	335
Total	0	583	15	598	34	0	11	45	9	525	0	534	0	0	0	0	1177
Grand Total	0	914	27	941	61	0	16	77	24	912	0	936	0	0	0	0	1954
Apprch %	0	97.1	2.9		79.2	0	20.8		2.6	97.4	0		0	0	0		
Total %	0	46.8	1.4	48.2	3.1	0	0.8	3.9	1.2	46.7	0	47.9	0	0	0	0	

	TELEGRAPH AV Southbound				38 th ST Westbound				TELEGRAPH AV Northbound				0 Eastbound				
Start Time	RT	TH	LT	App. Total	RT	TH	LT	App. Total	RT	TH	LT	App. Total	RT	TH	LT	App. Total	Int. Total
Peak Hour Analysis From 07:00 to 08:45 - Peak 1 of 1																	
Peak Hour for Entire Intersection Begins at 08:00																	
08:00	0	110	3	113	8	0	1	9	0	117	0	117	0	0	0	0	239
08:15	0	154	**6**	160	**12**	0	3	**15**	1	151	0	152	0	0	0	0	327
08:30	0	155	2	157	8	0	2	10	**5**	104	0	109	0	0	0	0	276
08:45	0	**164**	4	**168**	6	0	**5**	11	3	**153**	0	**156**	0	0	0	0	**335**
Total Volume	0	583	15	598	34	0	11	45	9	525	0	534	0	0	0	0	1177
% App. Total	0	97.5	2.5		75.6	0	24.4		1.7	98.3	0		0	0	0		
PHF	.000	.889	.625	.890	.708	.000	.550	.750	.450	.858	.000	.856	.000	.000	.000	.000	.878

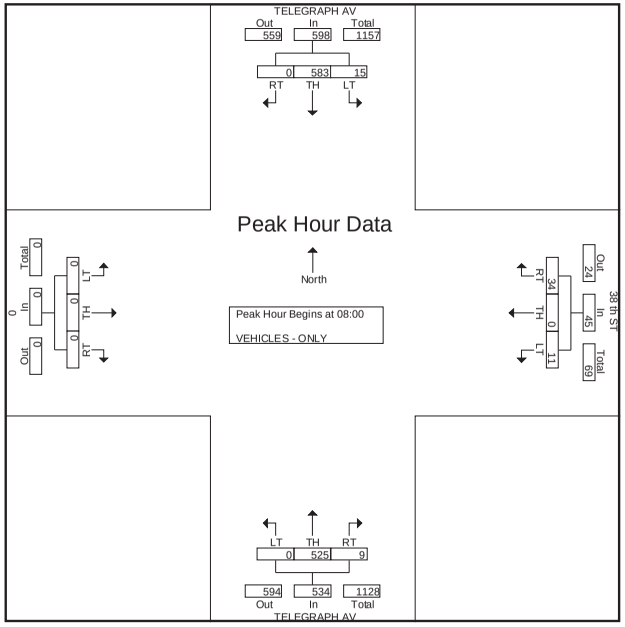

MARKS TRAFFIC DATA

AM 19
OAKLAND
FPW B
TITO [916] 715-4006

File Name : west-mcauther-a
Site Code : 00000000
Start Date : 5/9/2006
Page No : 1

Groups Printed- VEHICLES ONLY

	WEST ST Southbound				MACARTHUR BLVD Westbound				WEST ST Northbound				MACARTHUR BLVD Eastbound				
Start Time	RT	TH	LT	App. Total	RT	TH	LT	App. Total	RT	TH	LT	App. Total	RT	TH	LT	App. Total	Int. Total
Factor	1.0	1.0	1.0		1.0	1.0	1.0		1.0	1.0	1.0		1.0	1.0	1.0		
07:00	1	9	2	12	4	37	8	49	3	15	6	24	3	72	2	77	162
07:15	1	11	1	13	3	25	8	36	14	23	2	39	4	52	1	57	145
07:30	0	12	7	19	5	33	9	47	7	25	2	34	4	82	3	89	189
07:45	2	22	4	28	3	49	7	59	9	32	6	47	5	73	8	86	220
Total	4	54	14	72	15	144	32	191	33	95	16	144	16	279	14	309	716
08:00	2	27	7	36	8	47	12	67	9	36	8	53	3	91	10	104	260
08:15	6	26	5	37	8	64	9	81	14	43	7	64	2	108	6	116	298
08:30	2	31	6	39	9	63	7	79	15	43	7	65	0	83	7	90	273
08:45	0	21	5	26	7	70	5	82	12	44	8	64	2	85	2	89	261
Total	10	105	23	138	32	244	33	309	50	166	30	246	7	367	25	399	1092
Grand Total	14	159	37	210	47	388	65	500	83	261	46	390	23	646	39	708	1808
Apprch %	6.7	75.7	17.6		9.4	77.6	13		21.3	66.9	11.8		3.2	91.2	5.5		
Total %	0.8	8.8	2	11.6	2.6	21.5	3.6	27.7	4.6	14.4	2.5	21.6	1.3	35.7	2.2	39.2	

	WEST ST Southbound				MACARTHUR BLVD Westbound				WEST ST Northbound				MACARTHUR BLVD Eastbound				
Start Time	RT	TH	LT	App. Total	RT	TH	LT	App. Total	RT	TH	LT	App. Total	RT	TH	LT	App. Total	Int. Total
Peak Hour Analysis From 07:00 to 08:45 - Peak 1 of 1																	
Peak Hour for Entire Intersection Begins at 08:00																	
08:00	2	27	**7**	36	8	47	**12**	67	9	36	**8**	53	**3**	91	**10**	104	260
08:15	**6**	26	5	37	8	64	9	81	14	43	7	64	2	**108**	6	**116**	**298**
08:30	2	**31**	6	**39**	**9**	63	7	79	**15**	43	7	**65**	0	83	7	90	273
08:45	0	21	5	26	7	**70**	5	**82**	12	**44**	8	64	2	85	2	89	261
Total Volume	10	105	23	138	32	244	33	309	50	166	30	246	7	367	25	399	1092
% App. Total	7.2	76.1	16.7		10.4	79	10.7		20.3	67.5	12.2		1.8	92	6.3		
PHF	.417	.847	.821	.885	.889	.871	.688	.942	.833	.943	.938	.946	.583	.850	.625	.860	.916

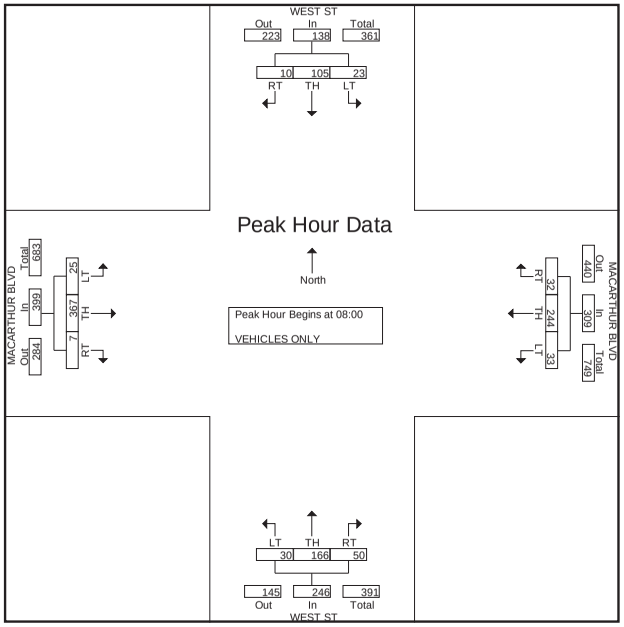

MARKS TRAFFIC DATA

AM 20
OAKLAND
FPW S
TITO [916] 715-4006

File Name : king-macarthur-a20
Site Code : 00000000
Start Date : 6/20/2006
Page No : 1

Groups Printed- VEHICLES ONLY

	M L KING WY Southbound				MacARTHUR BL Westbound				M L KING WY Northbound				MacAUTHUR BL Eastbound				
Start Time	RT	TH	LT	App. Total	RT	TH	LT	App. Total	RT	TH	LT	App. Total	RT	TH	LT	App. Total	Int. Total
07:00	3	18	7	28	24	30	5	59	1	13	2	16	4	59	6	69	172
07:15	2	14	4	20	22	37	3	62	5	15	2	22	4	63	12	79	183
07:30	2	16	4	22	30	40	7	77	1	18	2	21	6	73	13	92	212
07:45	1	26	17	44	22	41	6	69	7	29	4	40	3	75	5	83	236
Total	8	74	32	114	98	148	21	267	14	75	10	99	17	270	36	323	803
08:00	3	23	17	43	42	61	11	114	5	14	6	25	6	79	7	92	274
08:15	2	22	11	35	37	50	5	92	6	17	3	26	2	74	8	84	237
08:30	2	29	9	40	36	50	15	101	5	20	4	29	9	67	10	86	256
08:45	6	25	10	41	32	57	10	99	9	24	2	35	5	61	5	71	246
Total	13	99	47	159	147	218	41	406	25	75	15	115	22	281	30	333	1013
Grand Total	21	173	79	273	245	366	62	673	39	150	25	214	39	551	66	656	1816
Apprch %	7.7	63.4	28.9		36.4	54.4	9.2		18.2	70.1	11.7		5.9	84	10.1		
Total %	1.2	9.5	4.4	15	13.5	20.2	3.4	37.1	2.1	8.3	1.4	11.8	2.1	30.3	3.6	36.1	

	M L KING WY Southbound				MacARTHUR BL Westbound				M L KING WY Northbound				MacAUTHUR BL Eastbound				
Start Time	RT	TH	LT	App. Total	RT	TH	LT	App. Total	RT	TH	LT	App. Total	RT	TH	LT	App. Total	Int. Total
Peak Hour Analysis From 07:00 to 08:45 - Peak 1 of 1																	
Peak Hour for Entire Intersection Begins at 08:00																	
08:00	3	23	**17**	**43**	**42**	**61**	11	**114**	5	14	**6**	25	6	**79**	7	**92**	**274**
08:15	2	22	11	35	37	50	5	92	6	17	3	26	2	74	8	84	237
08:30	2	**29**	9	40	36	50	**15**	101	5	20	4	29	**9**	67	**10**	86	256
08:45	**6**	25	10	41	32	57	10	99	**9**	**24**	2	**35**	5	61	5	71	246
Total Volume	13	99	47	159	147	218	41	406	25	75	15	115	22	281	30	333	1013
% App. Total	8.2	62.3	29.6		36.2	53.7	10.1		21.7	65.2	13		6.6	84.4	9		
PHF	.542	.853	.691	.924	.875	.893	.683	.890	.694	.781	.625	.821	.611	.889	.750	.905	.924

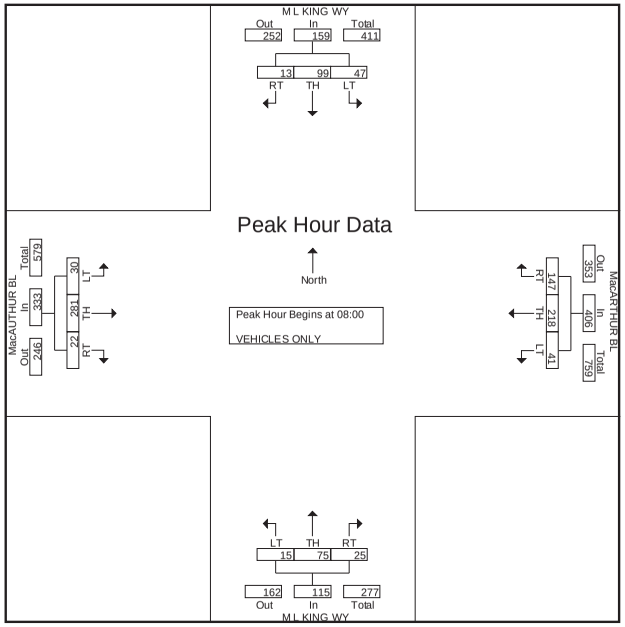

MARKS TRAFFIC DATA

AM 21
OAKLAND
FPW H
TITO [916] 715-4006

File Name : bart-dw-macathur-a20
Site Code : 00000000
Start Date : 6/20/2006
Page No : 1

Groups Printed- VEHICLES ONLY

	0 Southbound				MacATHUR BL Westbound				0 Northbound				MacATHUR BL Eastbound				
Start Time	RT	TH	LT	App. Total	RT	TH	LT	App. Total	RT	TH	LT	App. Total	RT	TH	LT	App. Total	Int. Total
07:00	22	0	0	22	15	31	0	46	0	0	0	0	0	62	0	62	130
07:15	28	0	0	28	11	44	0	55	0	0	0	0	0	77	0	77	160
07:30	35	0	0	35	5	49	0	54	0	0	0	0	0	89	0	89	178
07:45	29	0	0	29	9	44	0	53	0	0	0	0	0	95	0	95	177
Total	114	0	0	114	40	168	0	208	0	0	0	0	0	323	0	323	645
08:00	46	0	0	46	10	81	0	91	0	0	0	0	0	102	0	102	239
08:15	43	0	0	43	5	68	0	73	0	0	0	0	0	99	0	99	215
08:30	33	0	0	33	10	72	0	82	0	0	0	0	0	81	0	81	196
08:45	31	0	0	31	7	77	0	84	0	0	0	0	0	86	0	86	201
Total	153	0	0	153	32	298	0	330	0	0	0	0	0	368	0	368	851
Grand Total	267	0	0	267	72	466	0	538	0	0	0	0	0	691	0	691	1496
Apprch %	100	0	0		13.4	86.6	0		0	0	0		0	100	0		
Total %	17.8	0	0	17.8	4.8	31.1	0	36	0	0	0	0	0	46.2	0	46.2	

	0 Southbound				MacATHUR BL Westbound				0 Northbound				MacATHUR BL Eastbound				
Start Time	RT	TH	LT	App. Total	RT	TH	LT	App. Total	RT	TH	LT	App. Total	RT	TH	LT	App. Total	Int. Total
Peak Hour Analysis From 07:00 to 08:45 - Peak 1 of 1																	
Peak Hour for Entire Intersection Begins at 08:00																	
08:00	**46**	0	0	**46**	**10**	**81**	0	**91**	0	0	0	0	0	**102**	0	**102**	**239**
08:15	43	0	0	43	5	68	0	73	0	0	0	0	0	99	0	99	215
08:30	33	0	0	33	10	72	0	82	0	0	0	0	0	81	0	81	196
08:45	31	0	0	31	7	77	0	84	0	0	0	0	0	86	0	86	201
Total Volume	153	0	0	153	32	298	0	330	0	0	0	0	0	368	0	368	851
% App. Total	100	0	0		9.7	90.3	0		0	0	0		0	100	0		
PHF	.832	.000	.000	.832	.800	.920	.000	.907	.000	.000	.000	.000	.000	.902	.000	.902	.890

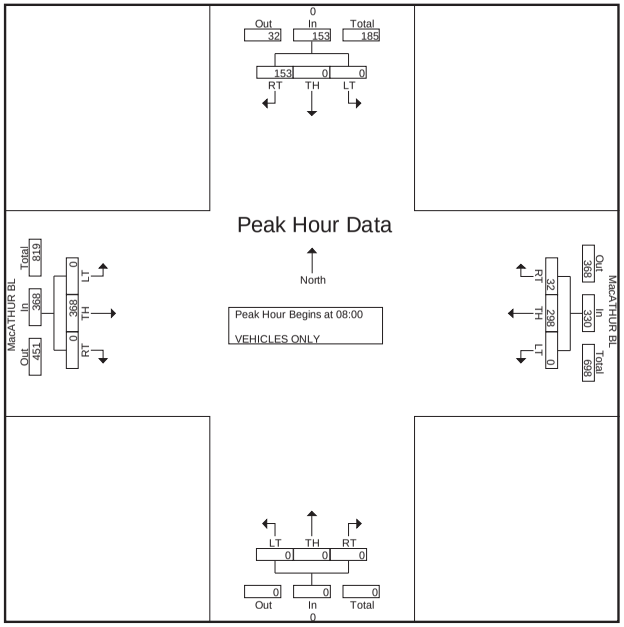

MARKS TRAFFIC DATA

AM 22
OAKLAND
FPW B
TITO [916] 715-4006

File Name : telegraph-mcaurther-a
Site Code : 00000000
Start Date : 5/10/2006
Page No : 1

Groups Printed- VEHICLES ONLY

	TELEGRAPH AVE Southbound				MACARTHUR BLVD Westbound				TELEGRAPH AVE Northbound				MACARTHUR BLVD Eastbound				
Start Time	RT	TH	LT	App. Total	RT	TH	LT	App. Total	RT	TH	LT	App. Total	RT	TH	LT	App. Total	Int. Total
Factor	1.0	1.0	1.0		1.0	1.0	1.0		1.0	1.0	1.0		1.0	1.0	1.0		
07:00	4	41	12	57	40	45	9	94	7	51	4	62	16	57	21	94	307
07:15	11	40	15	66	32	55	9	96	6	48	7	61	15	49	18	82	305
07:30	7	62	17	86	27	40	16	83	6	57	10	73	19	59	18	96	338
07:45	8	81	21	110	33	42	11	86	9	63	16	88	22	76	18	116	400
Total	30	224	65	319	132	182	45	359	28	219	37	284	72	241	75	388	1350
08:00	8	85	20	113	32	61	10	103	10	75	4	89	16	77	19	112	417
08:15	8	109	30	147	42	60	19	121	6	77	11	94	28	71	17	116	478
08:30	9	135	33	177	25	61	18	104	8	74	16	98	13	75	23	111	490
08:45	22	127	18	167	33	70	28	131	15	92	9	116	20	71	14	105	519
Total	47	456	101	604	132	252	75	459	39	318	40	397	77	294	73	444	1904
Grand Total	77	680	166	923	264	434	120	818	67	537	77	681	149	535	148	832	3254
Apprch %	8.3	73.7	18		32.3	53.1	14.7		9.8	78.9	11.3		17.9	64.3	17.8		
Total %	2.4	20.9	5.1	28.4	8.1	13.3	3.7	25.1	2.1	16.5	2.4	20.9	4.6	16.4	4.5	25.6	

	TELEGRAPH AVE Southbound				MACARTHUR BLVD Westbound				TELEGRAPH AVE Northbound				MACARTHUR BLVD Eastbound				
Start Time	RT	TH	LT	App. Total	RT	TH	LT	App. Total	RT	TH	LT	App. Total	RT	TH	LT	App. Total	Int. Total
Peak Hour Analysis From 07:00 to 08:45 - Peak 1 of 1																	
Peak Hour for Entire Intersection Begins at 08:00																	
08:00	8	85	20	113	32	61	10	103	10	75	4	89	16	**77**	19	112	417
08:15	8	109	30	147	**42**	60	19	121	6	77	11	94	**28**	71	17	**116**	478
08:30	9	**135**	**33**	**177**	25	61	18	104	8	74	**16**	98	13	75	**23**	111	490
08:45	**22**	127	18	167	33	**70**	**28**	**131**	**15**	**92**	9	**116**	20	71	14	105	**519**
Total Volume	47	456	101	604	132	252	75	459	39	318	40	397	77	294	73	444	1904
% App. Total	7.8	75.5	16.7		28.8	54.9	16.3		9.8	80.1	10.1		17.3	66.2	16.4		
PHF	.534	.844	.765	.853	.786	.900	.670	.876	.650	.864	.625	.856	.688	.955	.793	.957	.917

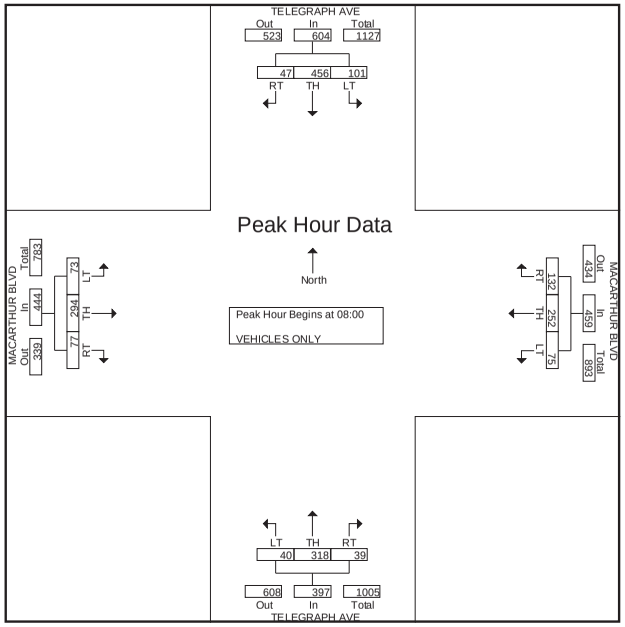

MARKS TRAFFIC DATA

AM 23
OAKLAND
FPW PS
TITO [916] 715-4006

File Name : broadway-mcaurther-a
Site Code : 00000000
Start Date : 5/9/2006
Page No : 1

Groups Printed- VEHICLES ONLY

	BROADWAY Southbound				MACARTHUR BL Westbound				BROADWAY Northbound				MACARTHUR BL Eastbound				
Start Time	RT	TH	LT	App. Total	RT	TH	LT	App. Total	RT	TH	LT	App. Total	RT	TH	LT	App. Total	Int. Total
Factor	1.0	1.0	1.0		1.0	1.0	1.0		1.0	1.0	1.0		1.0	1.0	1.0		
07:00	11	33	33	77	27	66	18	111	13	35	4	52	9	64	13	86	326
07:15	8	72	41	121	45	87	22	154	5	36	7	48	15	51	19	85	408
07:30	9	66	46	121	55	83	14	152	10	44	9	63	9	73	22	104	440
07:45	13	94	54	161	50	105	18	173	10	55	21	86	12	83	26	121	541
Total	41	265	174	480	177	341	72	590	38	170	41	249	45	271	80	396	1715
08:00	9	118	56	183	57	93	24	174	12	62	28	102	12	92	16	120	579
08:15	21	146	63	230	95	112	23	230	10	70	23	103	14	121	22	157	720
08:30	18	141	58	217	43	90	33	166	6	62	24	92	9	107	12	128	603
08:45	16	116	49	181	58	137	32	227	14	65	14	93	19	83	20	122	623
Total	64	521	226	811	253	432	112	797	42	259	89	390	54	403	70	527	2525
Grand Total	105	786	400	1291	430	773	184	1387	80	429	130	639	99	674	150	923	4240
Apprch %	8.1	60.9	31		31	55.7	13.3		12.5	67.1	20.3		10.7	73	16.3		
Total %	2.5	18.5	9.4	30.4	10.1	18.2	4.3	32.7	1.9	10.1	3.1	15.1	2.3	15.9	3.5	21.8	

	BROADWAY Southbound				MACARTHUR BL Westbound				BROADWAY Northbound				MACARTHUR BL Eastbound				
Start Time	RT	TH	LT	App. Total	RT	TH	LT	App. Total	RT	TH	LT	App. Total	RT	TH	LT	App. Total	Int. Total
Peak Hour Analysis From 07:00 to 08:45 - Peak 1 of 1																	
Peak Hour for Entire Intersection Begins at 08:00																	
08:00	9	118	56	183	57	93	24	174	12	62	**28**	102	12	92	16	120	579
08:15	**21**	**146**	**63**	**230**	**95**	112	23	**230**	10	**70**	23	**103**	14	**121**	**22**	**157**	**720**
08:30	18	141	58	217	43	90	**33**	166	6	62	24	92	9	107	12	128	603
08:45	16	116	49	181	58	**137**	32	227	**14**	65	14	93	**19**	83	20	122	623
Total Volume	64	521	226	811	253	432	112	797	42	259	89	390	54	403	70	527	2525
% App. Total	7.9	64.2	27.9		31.7	54.2	14.1		10.8	66.4	22.8		10.2	76.5	13.3		
PHF	.762	.892	.897	.882	.666	.788	.848	.866	.750	.925	.795	.947	.711	.833	.795	.839	.877

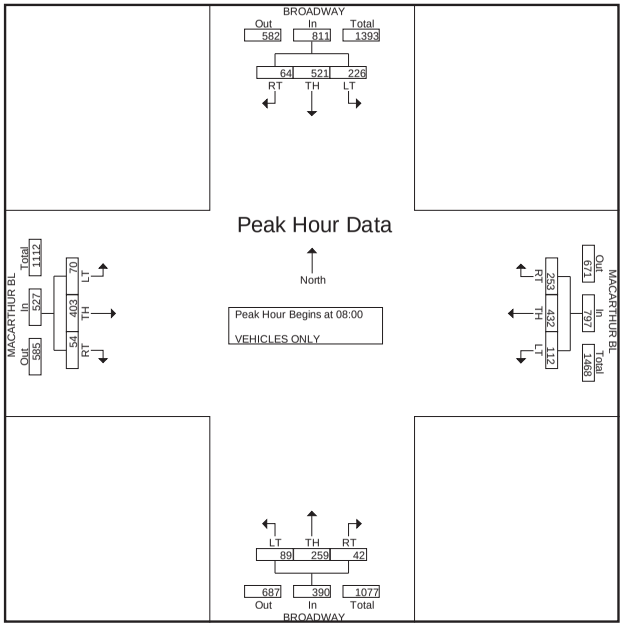

MARKS TRAFFIC DATA

AM 24
OAKLAND
FPW T
TITO [916] 715-4006

File Name : telegraph-34th-a
Site Code : 00000000
Start Date : 5/9/2006
Page No : 1

Groups Printed- VEHICLES ONLY

	TELEGRAPH AVE Southbound				34 th ST Westbound				TELEGRAPH AVE Northbound				34 th ST Eastbound				
Start Time	RT	TH	LT	App. Total	RT	TH	LT	App. Total	RT	TH	LT	App. Total	RT	TH	LT	App. Total	Int. Total
Factor	1.0	1.0	1.0		1.0	1.0	1.0		1.0	1.0	1.0		1.0	1.0	1.0		
07:00	8	33	2	43	2	6	4	12	6	63	6	75	3	3	10	16	146
07:15	9	36	2	47	1	8	10	19	7	73	9	89	4	5	11	20	175
07:30	9	55	4	68	7	7	2	16	5	57	14	76	5	2	17	24	184
07:45	10	66	2	78	6	8	6	20	3	108	9	120	6	3	13	22	240
Total	36	190	10	236	16	29	22	67	21	301	38	360	18	13	51	82	745
08:00	10	83	7	100	11	9	6	26	5	96	18	119	10	3	4	17	262
08:15	10	97	5	112	12	5	5	22	8	118	13	139	7	5	9	21	294
08:30	11	87	3	101	7	9	6	22	6	119	12	137	3	5	7	15	275
08:45	4	85	7	96	8	11	8	27	5	155	11	171	6	6	5	17	311
Total	35	352	22	409	38	34	25	97	24	488	54	566	26	19	25	70	1142
Grand Total	71	542	32	645	54	63	47	164	45	789	92	926	44	32	76	152	1887
Apprch %	11	84	5		32.9	38.4	28.7		4.9	85.2	9.9		28.9	21.1	50		
Total %	3.8	28.7	1.7	34.2	2.9	3.3	2.5	8.7	2.4	41.8	4.9	49.1	2.3	1.7	4	8.1	

	TELEGRAPH AVE Southbound				34 th ST Westbound				TELEGRAPH AVE Northbound				34 th ST Eastbound				
Start Time	RT	TH	LT	App. Total	RT	TH	LT	App. Total	RT	TH	LT	App. Total	RT	TH	LT	App. Total	Int. Total
Peak Hour Analysis From 07:00 to 08:45 - Peak 1 of 1																	
Peak Hour for Entire Intersection Begins at 08:00																	
08:00	10	83	**7**	100	11	9	6	26	5	96	**18**	119	**10**	3	4	17	262
08:15	10	**97**	5	**112**	**12**	5	5	22	**8**	118	13	139	7	5	**9**	**21**	294
08:30	**11**	87	3	101	7	9	6	22	6	119	12	137	3	5	7	15	275
08:45	4	85	7	96	8	**11**	**8**	**27**	5	**155**	11	**171**	6	**6**	5	17	**311**
Total Volume	35	352	22	409	38	34	25	97	24	488	54	566	26	19	25	70	1142
% App. Total	8.6	86.1	5.4		39.2	35.1	25.8		4.2	86.2	9.5		37.1	27.1	35.7		
PHF	.795	.907	.786	.913	.792	.773	.781	.898	.750	.787	.750	.827	.650	.792	.694	.833	.918

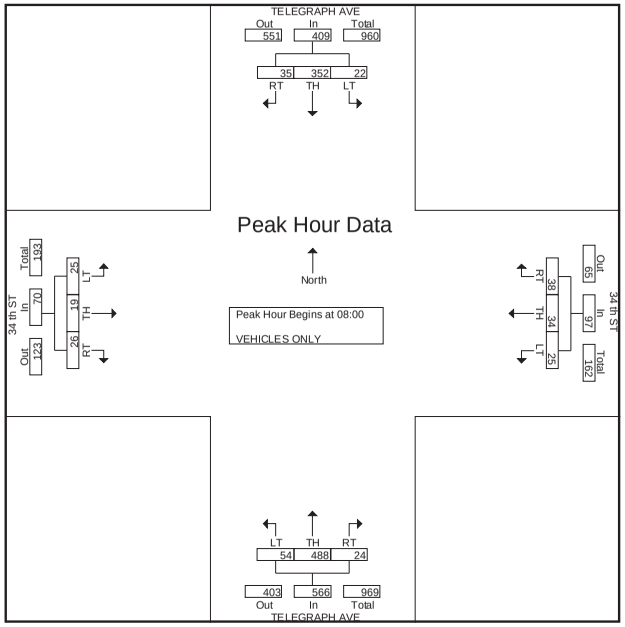

MARKS TRAFFIC DATA

AM 26
OAKLAND
FPW A
TITO [916] 715-4006

File Name : tetegraph-27th-a
Site Code : 00000000
Start Date : 5/9/2006
Page No : 1

Groups Printed- VEHICLES ONLY

	TELEGRAPH AVE Southbound				27 th ST Westbound				TELEGRAPH AVE Northbound				27 th ST Eastbound				
Start Time	RT	TH	LT	App. Total	RT	TH	LT	App. Total	RT	TH	LT	App. Total	RT	TH	LT	App. Total	Int. Total
Factor	1.0	1.0	1.0		1.0	1.0	1.0		1.0	1.0	1.0		1.0	1.0	1.0		
07:00	23	39	4	66	15	17	6	38	5	34	4	43	18	49	43	110	257
07:15	22	59	6	87	12	27	5	44	4	43	7	54	16	44	38	98	283
07:30	37	43	5	85	23	42	11	76	5	50	8	63	15	74	62	151	375
07:45	30	73	11	114	19	43	9	71	1	60	20	81	16	70	50	136	402
Total	112	214	26	352	69	129	31	229	15	187	39	241	65	237	193	495	1317
08:00	40	58	6	104	18	72	8	98	8	86	18	112	18	81	52	151	465
08:15	34	84	11	129	15	65	9	89	8	85	12	105	23	94	57	174	497
08:30	31	81	7	119	25	67	11	103	6	76	12	94	20	69	77	166	482
08:45	36	95	11	142	38	66	22	126	8	64	16	88	36	106	69	211	567
Total	141	318	35	494	96	270	50	416	30	311	58	399	97	350	255	702	2011
Grand Total	253	532	61	846	165	399	81	645	45	498	97	640	162	587	448	1197	3328
Apprch %	29.9	62.9	7.2		25.6	61.9	12.6		7	77.8	15.2		13.5	49	37.4		
Total %	7.6	16	1.8	25.4	5	12	2.4	19.4	1.4	15	2.9	19.2	4.9	17.6	13.5	36	

	TELEGRAPH AVE Southbound				27 th ST Westbound				TELEGRAPH AVE Northbound				27 th ST Eastbound				
Start Time	RT	TH	LT	App. Total	RT	TH	LT	App. Total	RT	TH	LT	App. Total	RT	TH	LT	App. Total	Int. Total
Peak Hour Analysis From 07:00 to 08:45 - Peak 1 of 1																	
Peak Hour for Entire Intersection Begins at 08:00																	
08:00	**40**	58	6	104	18	**72**	8	98	**8**	**86**	**18**	**112**	18	81	52	151	465
08:15	34	84	**11**	129	15	65	9	89	8	85	12	105	23	94	57	174	497
08:30	31	81	7	119	25	67	11	103	6	76	12	94	20	69	**77**	166	482
08:45	36	**95**	11	**142**	**38**	66	**22**	**126**	8	64	16	88	**36**	**106**	69	**211**	**567**
Total Volume	141	318	35	494	96	270	50	416	30	311	58	399	97	350	255	702	2011
% App. Total	28.5	64.4	7.1		23.1	64.9	12		7.5	77.9	14.5		13.8	49.9	36.3		
PHF	.881	.837	.795	.870	.632	.938	.568	.825	.938	.904	.806	.891	.674	.825	.828	.832	.887

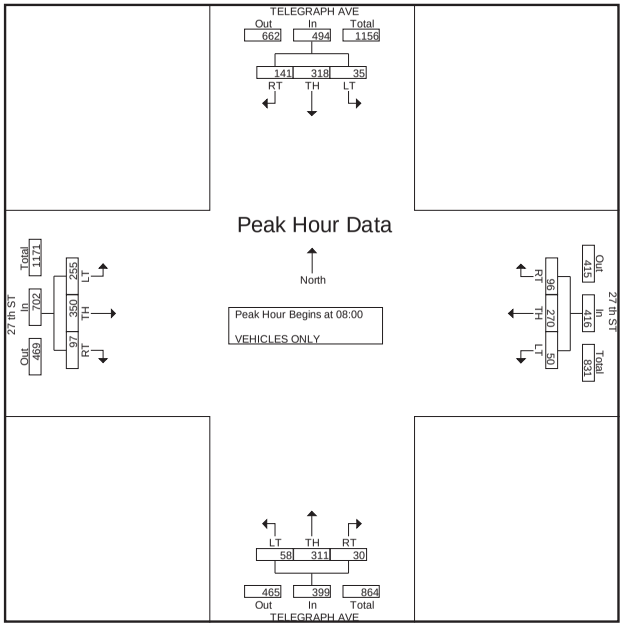

AM 11
OAKLAND
FPW T
TITO [916] 715-4006

MARKS TRAFFIC DATA

#15 AM P|B

File Name : ml-king-40th-a
Site Code : 00000000
Start Date : 5/10/2006
Page No : 1

Groups Printed- PEDS BIKES

	M LUTHER KING WY Southbound					40 th ST Westbound					M LUTHER KING WY Northbound					40 th ST Eastbound							
Start Time	RT	TH	LT	PED	App. Total	RT	TH	LT	PED	App. Total	RT	TH	LT	PED	App. Total	RT	TH	LT	PED	App. Total	Exclu. Total	Inclu. Total	Int. Total
07:00	0	0	0	2	0	0	2	0	7	2	1	0	0	10	1	0	1	0	1	1	20	4	24
07:15	0	0	0	2	0	0	2	0	16	2	0	1	1	16	2	0	5	0	3	5	37	9	46
07:30	1	1	0	4	2	0	6	0	15	6	1	1	0	26	2	0	0	0	5	0	50	10	60
07:45	0	3	1	5	4	0	2	0	11	2	0	1	0	15	1	0	4	0	14	4	45	11	56
Total	1	4	1	13	6	0	12	0	49	12	2	3	1	67	6	0	10	0	23	10	152	34	186
08:00	0	0	0	1	0	0	2	0	4	2	0	1	0	19	1	1	0	0	9	1	33	4	37
08:15	0	1	1	2	2	0	1	0	5	1	0	0	0	16	0	0	3	0	2	3	25	6	31
08:30	0	5	2	3	7	0	5	0	4	5	0	1	1	18	2	0	1	0	5	1	30	15	45
08:45	0	1	0	7	1	0	6	0	9	6	0	0	1	18	1	0	1	0	6	1	40	9	49
Total	0	7	3	13	10	0	14	0	22	14	0	2	2	71	4	1	5	0	22	6	128	34	162
Grand Total	1	11	4	26	16	0	26	0	71	26	2	5	3	138	10	1	15	0	45	16	280	68	348
Apprch %	6.3	68.8	25.0			0.0	100.0	0.0			20.0	50.0	30.0			6.3	93.8	0.0					
Total %	1.5	16.2	5.9		23.5	0.0	38.2	0.0		38.2	2.9	7.4	4.4		14.7	1.5	22.1	0.0		23.5	80.6	19.5	

	M LUTHER KING WY Southbound				40 th ST Westbound				M LUTHER KING WY Northbound				40 th ST Eastbound				
Start Time	RT	TH	LT	App. Total	RT	TH	LT	App. Total	RT	TH	LT	App. Total	RT	TH	LT	App. Total	Int. Total
Peak Hour From 07:00 to 08:45 - Peak 1 of 1																	
Intersection 07:45																	
Volume	0	9	4	13	0	10	0	10	0	3	1	4	1	8	0	9	36
Percent	0.0	69.2	30.8		0.0	100.0	0.0		0.0	75.0	25.0		11.1	88.9	0.0		
08:30 Volume	0	5	2	7	0	5	0	5	0	1	1	2	0	1	0	1	15
Peak Factor																	0.600
High Int. 08:30					08:30				08:30				07:45				
Volume	0	5	2	7	0	5	0	5	0	1	1	2	0	4	0	4	
Peak Factor				0.464				0.500				0.500				0.563	

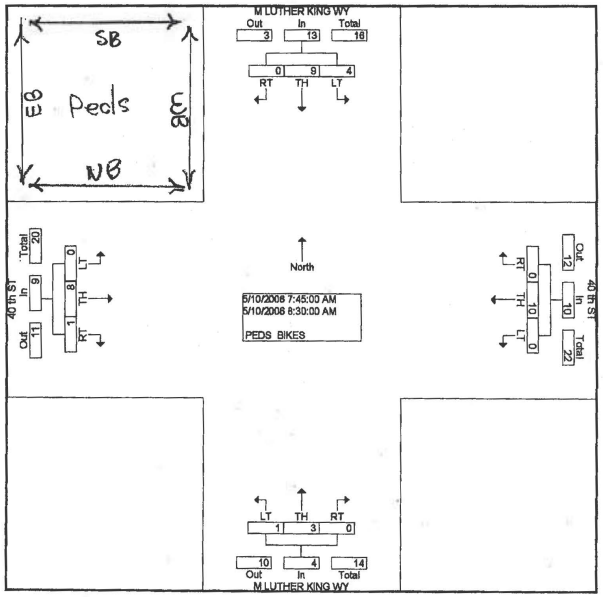

AM 12
OAKLAND
FPW L
TITO [916] 715-4006

MARKS TRAFFIC DATA

#16 P|B AM

File Name : dw12-40th-a
Site Code : 00000000
Start Date : 5/10/2006
Page No : 1

Groups Printed- PEDS BIKES

	40TH ST Southbound					0 Westbound					40TH ST Northbound					0 Eastbound							
Start Time	RT	TH	LT	PED	App. Total	RT	TH	LT	PED	App. Total	RT	TH	LT	PED	App. Total	RT	TH	LT	PED	App. Total	Exclu. Total	Inclu. Total	Int. Total
07:00	0	0	0	0	0	0	2	0	0	2	0	0	0	4	0	0	0	0	25	0	29	2	31
07:15	0	0	0	0	0	0	7	0	0	7	0	0	0	21	0	0	2	0	32	2	53	9	62
07:30	0	0	0	0	0	0	6	0	0	6	0	0	0	34	0	0	1	0	19	1	53	7	60
07:45	0	0	0	0	0	0	13	0	0	13	0	0	0	20	0	0	0	0	31	0	51	13	64
Total	0	0	0	0	0	0	28	0	0	28	0	0	0	79	0	0	3	0	107	3	186	31	217
08:00	0	0	0	0	0	0	12	0	0	12	0	0	0	23	0	0	1	0	34	1	57	13	70
08:15	0	0	0	0	0	0	10	0	0	10	0	0	0	35	0	0	2	0	42	2	77	12	89
08:30	0	0	0	0	0	0	8	0	0	8	0	0	0	28	0	0	3	0	31	3	59	11	70
08:45	0	0	0	0	0	0	3	0	0	3	0	0	0	34	0	0	2	0	39	2	73	5	78
Total	0	0	0	0	0	0	33	0	0	33	0	0	0	120	0	0	8	0	146	8	266	41	307
Grand Total	0	0	0	0	0	0	61	0	0	61	0	0	0	199	0	0	11	0	253	11	452	72	524
Apprch %	0.0	0.0	0.0			0.0	100.0	0.0			0.0	0.0	0.0			0.0	100.0	0.0					
Total %	0.0	0.0	0.0		0.0	0.0	84.7	0.0		84.7	0.0	0.0	0.0		0.0	0.0	15.3	0.0		15.3	86.3	13.7	

	40TH ST Southbound				0 Westbound				40TH ST Northbound				0 Eastbound				
Start Time	RT	TH	LT	App. Total	RT	TH	LT	App. Total	RT	TH	LT	App. Total	RT	TH	LT	App. Total	Int. Total
Peak Hour From 07:00 to 08:45 - Peak 1 of 1																	
Intersection 07:45																	
Volume	0	0	0	0	0	43	0	43	0	0	0	0	0	6	0	6	49
Percent	0.0	0.0	0.0		0.0	100.0	0.0		0.0	0.0	0.0		0.0	100.0	0.0		
08:00 Volume	0	0	0	0	0	12	0	12	0	0	0	0	0	1	0	1	13
Peak Factor																	0.942
High Int. 6:45:00 AM					07:45				6:45:00 AM				08:30				
Volume	0	0	0	0	0	13	0	13	0	0	0	0	0	3	0	3	
Peak Factor								0.827								0.500	

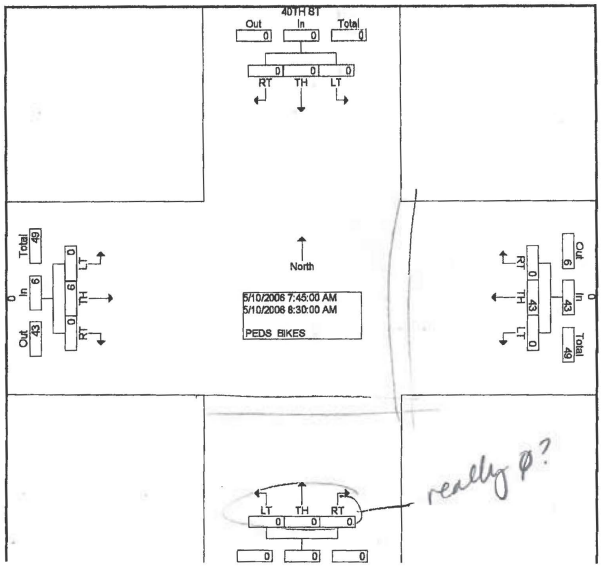

FROM :MJD FAX NO. :916 364 7987 Jun. 14 2006 07:58AM P6

AM 13
OAKLAND
FPW C
TITO [916] 715-4006

#17 P/B
AM

MARKS TRAFFIC DATA

File Name : dw13-40th-a
Site Code : 00000000
Start Date : 5/10/2006
Page No : 1

Groups Printed- PEDS BIKES

	0 Southbound					40 th ST Westbound					0 Northbound					40 th ST Eastbound							
Start Time	RT	TH	LT	PED	App. Total	RT	TH	LT	PED	App. Total	RT	TH	LT	PED	App. Total	RT	TH	LT	PED	App. Total	Exclu. Total	Inclu. Total	Int. Total
Factor	1.0	1.0	1.0	1.0		1.0	1.0	1.0	1.0		1.0	1.0	1.0	1.0		1.0	1.0	1.0	1.0				
07:00	0	0	0	0	0	0	2	0	9	2	0	0	0	0	0	0	0	0	2	0	11	2	13
07:15	0	0	0	0	0	0	6	0	32	6	0	0	0	0	0	0	0	0	10	0	42	6	48
07:30	0	0	0	0	0	0	7	0	37	7	0	0	0	0	0	0	3	0	12	3	49	10	59
07:45	0	0	0	0	0	0	14	0	32	14	0	0	0	0	0	0	0	0	5	0	37	14	51
Total	0	0	0	0	0	0	29	0	110	29	0	0	0	0	0	0	3	0	29	3	139	32	171
08:00	0	0	0	0	0	0	13	0	23	13	0	0	0	0	0	0	1	0	11	1	34	14	48
08:15	0	0	0	0	0	0	10	0	53	10	0	0	0	0	0	0	1	0	10	1	63	11	74
08:30	0	0	0	0	0	0	9	0	33	9	0	0	0	0	0	0	4	0	6	4	39	13	52
08:45	0	0	0	0	0	0	3	0	14	3	0	0	0	0	0	0	2	0	3	2	17	5	22
Total	0	0	0	0	0	0	35	0	123	35	0	0	0	0	0	0	8	0	30	8	153	43	196
Grand Total	0	0	0	0	0	0	64	0	233	64	0	0	0	0	0	0	11	0	59	11	292	75	367
Apprch %	0.0	0.0	0.0			0.0	100.0	0.0			0.0	0.0	0.0			0.0	100.0	0.0					
Total %	0.0	0.0	0.0		0.0	0.0	85.3	0.0		85.3	0.0	0.0	0.0		0.0	0.0	14.7	0.0		14.7	79.6	20.4	

	0 Southbound				40 th ST Westbound				0 Northbound				40 th ST Eastbound				
Start Time	RT	TH	LT	App. Total	RT	TH	LT	App. Total	RT	TH	LT	App. Total	RT	TH	LT	App. Total	Int. Total
Peak Hour From 07:00 to 08:45 - Peak 1 of 1																	
Intersection 07:45																	
Volume	0	0	0	0	0	46	0	46	0	0	0	0	0	6	0	6	52
Percent	0.0	0.0	0.0		0.0	100.0	0.0		0.0	0.0	0.0		0.0	100.0	0.0		
08:00 Volume	0	0	0	0	0	13	0	13	0	0	0	0	0	1	0	1	14
Peak Factor																	0.929
High Int.	6:45:00 AM				07:45				6:45:00 AM				08:30				
Volume	0	0	0	0	0	14	0	14	0	0	0	0	0	4	0	4	
Peak Factor								0.821								0.375	

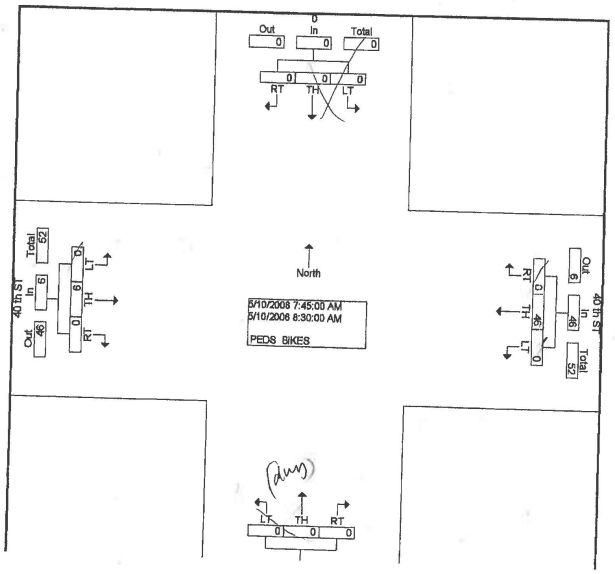

#19 P/B
AM B/P

MARKS TRAFFIC DATA

CITY OF OAKLAND
FP
AM 15

File Name : telegraph-40-a
Site Code : 15
Start Date : 5/10/2006
Page No : 1

Groups Printed- Bikes & Peds

	TELEGRAPH AV. Southbound					40th ST. Westbound					TELEGRAPH AV. Northbound					40th ST. Eastbound					
Start Time	RT	TH	LT	Ped	App. Total	RT	TH	LT	Ped	App. Total	RT	TH	LT	Ped	App. Total	RT	TH	LT	Ped	App. Total	Int. Total
07:00	0	3	1	11	15	0	3	0	11	14	0	1	0	11	12	0	0	0	11	11	52
07:15	4	4	0	11	19	0	1	0	10	11	0	2	2	24	28	0	0	0	18	18	76
07:30	3	4	0	9	16	0	2	0	11	13	0	7	1	24	32	0	2	0	26	28	89
07:45	6	3	0	13	22	0	4	0	16	20	0	3	0	23	26	0	0	0	26	26	94
Total	13	14	1	44	72	0	10	0	48	58	0	13	3	82	98	0	2	0	81	83	311
08:00	4	7	0	11	22	0	8	0	10	18	0	4	2	36	42	0	1	0	14	15	97
08:15	2	3	0	19	24	1	6	0	20	27	0	1	0	35	36	1	1	1	36	39	126
08:30	5	6	1	12	24	1	3	0	10	14	0	1	0	33	34	0	2	0	18	20	92
08:45	1	6	0	30	37	0	1	0	18	19	0	2	1	33	36	0	0	0	24	24	116
Total	12	22	1	72	107	2	18	0	58	78	0	8	3	137	148	1	4	1	92	98	431
Grand Total	25	36	2	116	179	2	28	0	106	136	0	21	6	219	246	1	6	1	173	181	742
Apprch %	14	20.1	1.1	64.8		1.5	20.6	0	77.9		0	8.5	2.4	89		0.6	3.3	0.6	95.6		
Total %	3.4	4.9	0.3	15.6	24.1	0.3	3.8	0	14.3	18.3	0	2.8	0.8	29.5	33.2	0.1	0.8	0.1	23.3	24.4	

	TELEGRAPH AV. Southbound					40th ST. Westbound					TELEGRAPH AV. Northbound					40th ST. Eastbound				
Start Time	RT	TH	LT	Ped	App. Total	RT	TH	LT	Ped	App. Total	RT	TH	LT	Ped	App. Total	RT	TH	LT	App. Total	Int. Total
Peak Hour Analysis From 07:00 to 08:45 - Peak 1 of 1																				
Peak Hour for Entire Intersection Begins at 08:00																				
08:00	4	7	0	11	22	0	8	0	10	18	0	4	2	36	42	0	1	0	1	83
08:15	2	3	0	19	24	1	6	0	20	27	0	1	0	35	36	1	1	1	3	90
08:30	5	6	1	12	24	1	3	0	10	14	0	1	0	33	34	0	2	0	2	74
08:45	1	6	0	30	37	0	1	0	18	19	0	2	1	33	36	0	0	0	0	92
Total Volume	12	22	1	72	107	2	18	0	58	78	0	8	3	137	148	1	4	1	6	339
% App. Total	11.2	20.6	0.9	67.3		2.6	23.1	0	74.4		0	5.4	2	92.6		16.7	66.7	16.7		
PHF	.600	.786	.250	.600	.723	.500	.563	.000	.725	.722	.000	.500	.375	.951	.881	.250	.500	.250	.500	.921

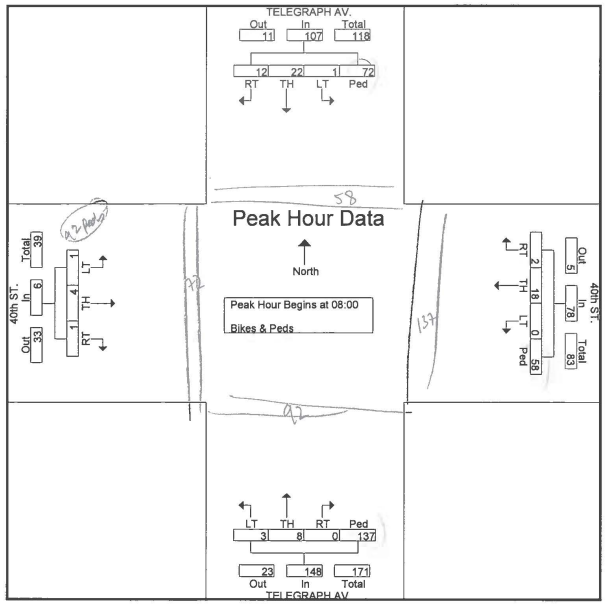

AM 20
OAKLAND
FPW E
TITO [916] 715-4006

MARKS TRAFFIC DATA

#24 PIB AM

File Name : ml-kinkmcaurther-a
Site Code : 00000000
Start Date : 5/23/2006
Page No : 1

Groups Printed- PEDS BIES

	M L KING WY Southbound					MACARTHUR BL Westbound					M L KING WY Northbound					MACARTHUR BL Eastbound							
Start Time	RT	TH	LT	PED	App. Total	RT	TH	LT	PED	App. Total	RT	TH	LT	PED	App. Total	RT	TH	LT	PED	App. Total	Exclu. Total	Inclu. Total	Int. Total
Factor	1.0	1.0	1.0	1.0		1.0	1.0	1.0	1.0		1.0	1.0	1.0	1.0		1.0	1.0	1.0	1.0				
07:00	0	0	0	0	0	0	1	0	1	1	0	0	0	0	0	0	1	0	5	1	6	2	8
07:15	0	0	0	0	0	0	0	0	3	0	0	0	1	1	1	0	0	0	2	0	6	1	7
07:30	0	2	0	2	2	1	0	0	7	1	0	1	0	6	1	0	1	0	6	1	21	5	26
07:45	0	1	0	6	1	0	3	0	14	3	0	0	1	5	1	0	0	0	9	0	34	5	39
Total	0	3	0	8	3	1	4	0	25	5	0	1	2	12	3	0	2	0	22	2	67	13	80
08:00	0	1	0	5	1	0	1	3	7	4	0	1	1	1	2	0	2	0	5	2	18	9	27
08:15	0	0	0	3	0	0	0	0	5	0	0	1	0	5	1	0	0	0	3	0	16	1	17
08:30	0	1	0	6	1	0	1	0	0	1	0	3	0	9	3	0	3	0	3	3	18	8	26
08:45	0	1	0	3	1	0	1	2	4	3	0	1	0	4	1	0	1	0	1	1	12	6	18
Total	0	3	0	17	3	0	3	5	16	8	0	6	1	19	7	0	6	0	12	6	64	24	88
Grand Total	0	6	0	25	6	1	7	5	41	13	0	7	3	31	10	0	8	0	34	8	131	37	168
Approch %	0.0	100.0	0.0			7.7	53.8	38.5			0.0	70.0	30.0			0.0	100.0	0.0					
Total %	0.0	16.2	0.0		16.2	2.7	18.9	13.5		35.1	0.0	18.9	8.1		27.0	0.0	21.6	0.0		21.6	78.0	22.0	

	M L KING WY Southbound				MACARTHUR BL Westbound				M L KING WY Northbound				MACARTHUR BL Eastbound				
Start Time	RT	TH	LT	App. Total	RT	TH	LT	App. Total	RT	TH	LT	App. Total	RT	TH	LT	App. Total	Int. Total
Peak Hour From 07:00 to 08:45 - Peak 1 of 1																	
Intersection	08:00																
Volume	0	3	0	3	0	3	5	8	0	6	1	7	0	6	0	6	24
Percent	0.0	100.0	0.0		0.0	37.5	62.5		0.0	85.7	14.3		0.0	100.0	0.0		
08:00 Volume	0	1	0	1	0	1	3	4	0	1	1	2	0	2	0	2	9
Peak Factor																	0.667
High Int.	08:00				08:00				08:30				08:30				
Volume	0	1	0	1	0	1	3	4	0	3	0	3	0	3	0	3	
Peak Factor				0.750				0.500				0.583				0.500	

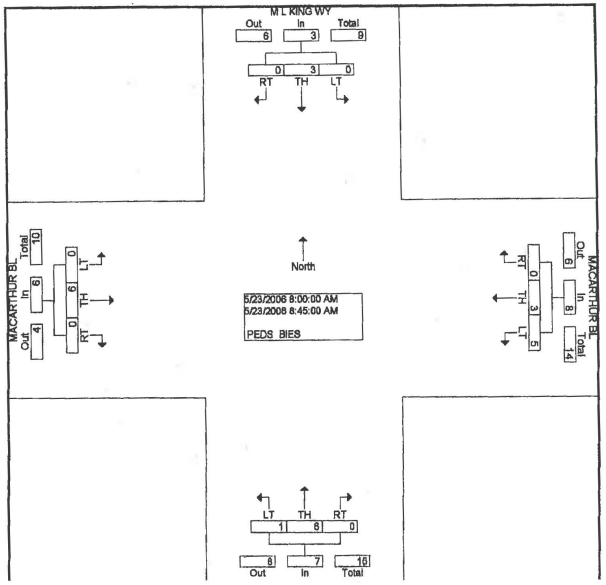

AM 21
OAKLAND
FPW P
TITO [916] 715-4006

MARKS TRAFFIC DATA

#25 PIB AM

File Name : pd-bart-dw-macarther-a
Site Code : 00000000
Start Date : 5/10/2006
Page No : 1

Groups Printed- PEDS BIKES

	BART DW Southbound					MacARTHUR BL Westbound					0 Northbound					MacAUTHUR BL Eastbound					
Start Time	RT	TH	LT	Peds	App. Total	RT	TH	LT	Peds	App. Total	RT	TH	LT	Peds	App. Total	RT	TH	LT	Peds	App. Total	Int. Total
Factor	1.0	1.0	1.0	1.0		1.0	1.0	1.0	1.0		1.0	1.0	1.0	1.0		1.0	1.0	1.0	1.0		
07:00	6	0	0	4	10	0	0	0	0	0	0	0	0	0	0	0	0	1	0	1	11
07:15	9	0	0	13	22	0	1	0	0	1	0	0	0	0	0	0	0	0	0	0	23
07:30	9	0	0	35	44	3	1	0	0	4	0	0	0	0	0	0	1	1	0	2	50
07:45	6	0	0	18	24	1	0	0	0	1	0	0	0	0	0	0	0	1	0	1	26
Total	30	0	0	70	100	4	2	0	0	6	0	0	0	0	0	0	1	3	0	4	110
08:00	1	9	0	16	26	1	1	0	0	2	0	9	0	0	9	0	3	1	0	4	41
08:15	3	1	0	0	4	3	1	0	0	4	0	0	0	0	0	0	1	2	0	3	45
08:30	0	0	0	30	30	3	1	0	0	4	0	0	0	0	0	0	1	0	0	1	35
08:45	0	0	0	25	25	1	3	0	0	4	0	0	0	0	0	0	2	0	0	2	31
Total	10	9	2	98	119	8	6	0	0	14	0	9	0	0	9	0	7	3	0	10	152
Grand Total	40	9	2	168	219	12	8	0	0	20	0	9	0	0	9	0	8	6	0	14	262
Apprch %	18.3	4.1	0.9	76.7		60.0	40.0	0.0	0.0		0.0	100.0	0.0	0.0		0.0	57.1	42.9	0.0		
Total %	15.3	3.4	0.8	64.1	83.6	4.6	3.1	0.0	0.0	7.6	0.0	3.4	0.0	0.0	3.4	0.0	3.1	2.3	0.0	5.3	

	BART DW Southbound					MacARTHUR BL Westbound					0 Northbound					MacAUTHUR BL Eastbound					
Start Time	RT	TH	LT	Peds	App. Total	RT	TH	LT	Peds	App. Total	RT	TH	LT	Peds	App. Total	RT	TH	LT	Peds	App. Total	Int. Total
Peak Hour From 07:00 to 08:45 - Peak 1 of 1																					
Intersection	07:30																				
Volume	25	9	2	96	132	8	3	0	0	11	0	9	0	0	9	0	5	5	0	10	162
Percent	18.9	6.8	1.5	72.7		72.7	27.3	0.0	0.0		0.0	100.0	0.0	0.0		0.0	50.0	50.0	0.0		
07:30 Volume	9	0	0	35	44	3	1	0	0	4	0	0	0	0	0	0	1	1	0	2	50
Peak Factor																					0.810
High Int.	07:30					07:30					08:00					08:00					
Volume	9	0	0	35	44	3	1	0	0	4	0	9	0	0	9	0	3	1	0	4	
Peak Factor					0.750					0.688					0.250					0.625	

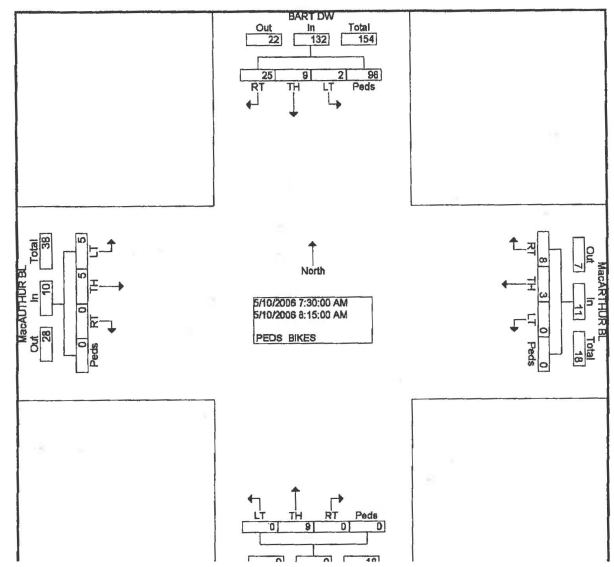

MARKS TRAFFIC DATA

AM 18
OAKLAND
FPW H
TITO [916] 715-4006

#27 (P/B not requested)

File Name : telegrahph-38th-a
Site Code : 00000000
Start Date : 5/10/2006
Page No : 1

Groups Printed- PERS BIKES ??

	TELEGRAPH AVE Southbound					38TH ST Westbound					TELEGRAPH AVE Northbound					0 Eastbound							
Start Time	RT	TH	LT	PED	App. Total	RT	TH	LT	PED	App. Total	RT	TH	LT	PED	App. Total	RT	TH	LT	PED	App. Total	Exclu. Total	Inclu. Total	Int. Total
Factor	1.0	1.0	1.0	1.0		1.0	1.0	1.0	1.0		1.0	1.0	1.0	1.0		1.0	1.0	1.0	1.0				
07:00	0	3	0	4	3	0	0	0	4	0	0	3	0	0	3	0	0	0	0	0	8	6	14
07:15	0	2	0	5	2	2	0	1	2	3	0	4	0	0	4	0	0	0	0	0	7	9	16
07:30	0	5	0	2	5	2	0	2	3	4	0	9	0	1	9	0	0	0	0	0	6	18	24
07:45	0	6	0	9	6	1	0	0	7	1	0	5	0	2	5	0	0	0	0	0	18	12	30
Total	0	16	0	20	16	5	0	3	16	8	0	21	0	3	21	0	0	0	0	0	39	45	84
08:00	0	7	0	2	7	2	0	0	5	2	0	7	0	0	7	0	0	0	0	0	7	16	23
08:15	0	2	0	2	2	1	0	1	7	2	0	1	0	4	1	0	0	0	0	0	13	5	18
08:30	0	5	1	1	6	0	0	0	5	0	0	7	0	2	7	0	0	0	0	0	8	13	21
08:45	0	7	0	2	7	0	0	0	10	0	0	5	0	0	5	0	0	0	0	0	12	12	24
Total	0	21	1	7	22	3	0	1	27	4	0	20	0	6	20	0	0	0	0	0	40	46	86
Grand Total	0	37	1	27	38	8	0	4	43	12	0	41	0	9	41	0	0	0	0	0	79	91	170
Apprch %	0	97.4	2.6			66.7	0	33.3			0	100	0			0	0	0					
Total %	0	40.7	1.1		41.8	8.8	0	4.4		13.2	0	45.1	0		45.1	0	0	0		0	46.5	53.5	

	TELEGRAPH AVE Southbound				38TH ST Westbound				TELEGRAPH AVE Northbound				0 Eastbound				
Start Time	RT	TH	LT	App. Total	RT	TH	LT	App. Total	RT	TH	LT	App. Total	RT	TH	LT	App. Total	Int. Total
Peak Hour Analysis From 07:00 to 08:45 - Peak 1 of 1																	
Peak Hour for Entire Intersection Begins at 07:15																	
07:15	0	2	0	2	2	0	1	3	0	4	0	4	0	0	0	0	9
07:30	0	5	0	5	2	0	2	4	0	9	0	9	0	0	0	0	18
07:45	0	6	0	6	1	0	0	1	0	5	0	5	0	0	0	0	12
08:00	0	7	0	7	2	0	0	2	0	7	0	7	0	0	0	0	16
Total Volume	0	20	0	20	7	0	3	10	0	25	0	25	0	0	0	0	55
% App. Total	0	100	0		70	0	30		0	100	0		0	0	0		
PHF	.000	.714	.000	.714	.875	.000	.375	.625	.000	.694	.000	.694	.000	.000	.000	.000	.764

AM 22
OAKLAND
FPW B
TITO [916] 715-4006

MARKS TRAFFIC DATA

#28 P/B AM

File Name : pd-telegraph-macarther-a
Site Code : 00000000
Start Date : 5/10/2006
Page No : 1

Groups Printed- PEDS BIKES

	TELEGRAPH AV Southbound					MacARTHUR BL Westbound					TELEGRAPH AV Northbound					MacAUTHUR BL Eastbound					
Start Time	RT	TH	LT	Peds	App. Total	RT	TH	LT	Peds	App. Total	RT	TH	LT	Peds	App. Total	RT	TH	LT	Peds	App. Total	Int. Total
Factor	1.0	1.0	1.0	1.0		1.0	1.0	1.0	1.0		1.0	1.0	1.0	1.0		1.0	1.0	1.0	1.0		
07:00	6	2	1	8	17	1	1	0	11	13	0	2	0	4	6	0	0	0	7	7	43
07:15	9	4	0	6	19	1	1	0	4	6	0	3	0	5	8	0	0	0	10	10	43
07:30	9	4	0	7	20	2	3	0	6	11	0	8	2	4	14	0	1	0	15	16	61
07:45	6	5	1	4	16	0	2	0	11	13	0	4	1	2	7	0	1	0	6	7	43
Total	30	15	2	25	72	4	7	0	32	43	0	17	3	15	35	0	2	0	38	40	190
08:00	1	9	0	10	20	1	0	0	6	7	0	9	0	3	12	0	1	1	10	12	51
08:15	9	3	1	8	21	1	2	0	9	12	0	0	0	2	2	0	0	1	7	8	43
08:30	1	6	0	6	13	2	4	0	8	14	0	3	7	1	11	0	0	0	3	3	41
08:45	0	4	0	16	20	0	2	0	8	10	0	7	1	3	11	1	1	0	5	7	48
Total	11	22	1	40	74	4	8	0	31	43	0	19	8	9	36	1	2	2	25	30	183
Grand Total	41	37	3	65	146	8	15	0	63	86	0	36	11	24	71	1	4	2	63	70	373
Apprch %	28.1	25.3	2.1	44.5		9.3	17.4	0.0	73.3		0.0	50.7	15.5	33.8		1.4	5.7	2.9	90.0		
Total %	11.0	9.9	0.8	17.4	39.1	2.1	4.0	0.0	16.9	23.1	0.0	9.7	2.9	6.4	19.0	0.3	1.1	0.5	16.9	18.8	

	TELEGRAPH AV Southbound					MacARTHUR BL Westbound					TELEGRAPH AV Northbound					MacAUTHUR BL Eastbound					
Start Time	RT	TH	LT	Peds	App. Total	RT	TH	LT	Peds	App. Total	RT	TH	LT	Peds	App. Total	RT	TH	LT	Peds	App. Total	Int. Total
Peak Hour From 07:00 to 08:45 - Peak 1 of 1																					
Intersection 07:15																					
Volume	25	22	1	27	75	4	6	0	27	37	0	24	3	14	41	0	3	1	41	45	198
Percent	33.3	29.3	1.3	36.0		10.8	16.2	0.0	73.0		0.0	58.5	7.3	34.1		0.0	6.7	2.2	91.1		
07:30 Volume	9	4	0	7	20	2	3	0	6	11	0	8	2	4	14	0	1	0	15	16	61
Peak Factor																					0.811
High Int. 07:30						07:45					07:30					07:30					
Volume	9	4	0	7	20	0	2	0	11	13	0	8	2	4	14	0	1	0	15	16	
Peak Factor					0.938					0.712					0.732					0.703	

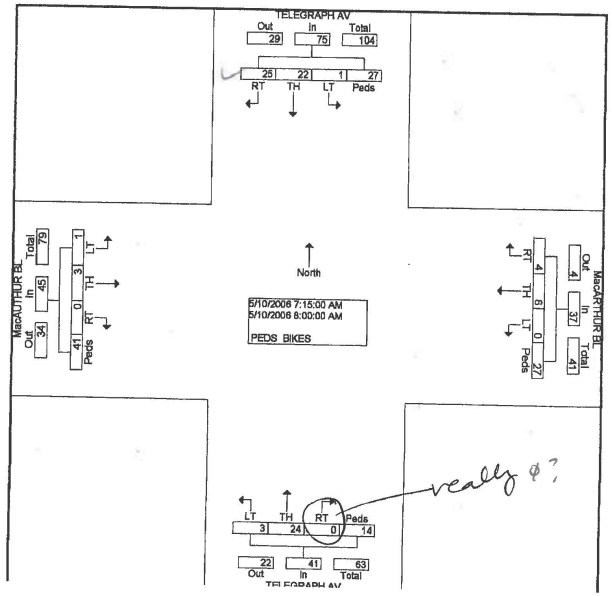

FROM :MJD FAX NO. :916 364 7987 Jun. 14 2006 08:03AM P14

AM 27
OAKLAND
FPW K
TITO [916] 715-4006

MARKS TRAFFIC DATA

#50
P/B
AM

File Name : ml-king-39th-a
Site Code : 00000000
Start Date : 5/10/2006
Page No : 1

Groups Printed- PEDS BIKES

	M L KING WY Southbound					39TH ST Westbound					M L KING WY Northbound					39TH ST Eastbound							
Start Time	RT	TH	LT	PED	App. Total	RT	TH	LT	PED	App. Total	RT	TH	LT	PED	App. Total	RT	TH	LT	PED	App. Total	Exclu. Total	Inclu. Total	Int. Total
Factor	1.0	1.0	1.0	1.0		1.0	1.0	1.0	1.0		1.0	1.0	1.0	1.0		1.0	1.0	1.0	1.0				
07:00	0	0	0	1	0	0	2	0	3	2	0	0	0	0	0	0	0	0	3	0	7	2	9
07:15	0	0	0	0	0	0	2	0	6	2	0	0	0	1	0	0	0	0	3	0	10	2	12
07:30	0	0	0	0	0	0	4	0	6	4	0	4	0	1	4	0	0	0	4	0	11	8	19
07:45	0	0	1	0	0	0	2	0	3	2	0	2	0	1	2	0	0	0	6	0	11	4	15
Total	0	0	0	2	0	0	10	0	18	10	0	6	0	3	6	0	0	0	16	0	39	16	55
08:00	0	0	0	5	0	0	0	0	6	0	0	0	0	0	0	0	0	0	13	0	24	0	24
08:15	0	0	0	3	0	0	1	0	6	1	0	2	0	1	2	0	0	0	5	0	15	3	18
08:30	0	0	0	1	0	0	0	0	2	0	0	5	0	0	5	0	0	0	6	0	9	5	14
08:45	0	0	0	0	0	0	2	0	4	2	0	1	0	1	1	0	0	0	2	0	7	3	10
Total	0	0	0	9	0	0	3	0	18	3	0	8	0	2	8	0	0	0	26	0	55	11	66
Grand Total	0	0	0	11	0	0	13	0	36	13	0	14	0	5	14	0	0	0	42	0	94	27	121
Apprch %	0.0	0.0	0.0			0.0	100.0	0.0			0.0	100.0	0.0			0.0	0.0	0.0					
Total %	0.0	0.0	0.0		0.0	0.0	48.1	0.0		48.1	0.0	51.9	0.0		51.9	0.0	0.0	0.0		0.0	77.7	22.3	

	M L KING WY Southbound				39TH ST Westbound				M L KING WY Northbound				39TH ST Eastbound				
Start Time	RT	TH	LT	App. Total	RT	TH	LT	App. Total	RT	TH	LT	App. Total	RT	TH	LT	App. Total	Int. Total
Peak Hour From 07:00 to 08:45 - Peak 1 of 1																	
Intersection 07:00																	
Volume	0	0	0	0	0	10	0	10	0	6	0	6	0	0	0	0	16
Percent	0.0	0.0	0.0		0.0	100.0	0.0		0.0	100.0	0.0		0.0	0.0	0.0		
07:30 Volume	0	0	0	0	0	4	0	4	0	4	0	4	0	0	0	0	8
Peak Factor																	0.500
High Int.	6:45:00 AM				07:30				07:30				6:45:00 AM				
Volume	0	0	0	0	0	4	0	4	0	4	0	4					
Peak Factor								0.625				0.375					

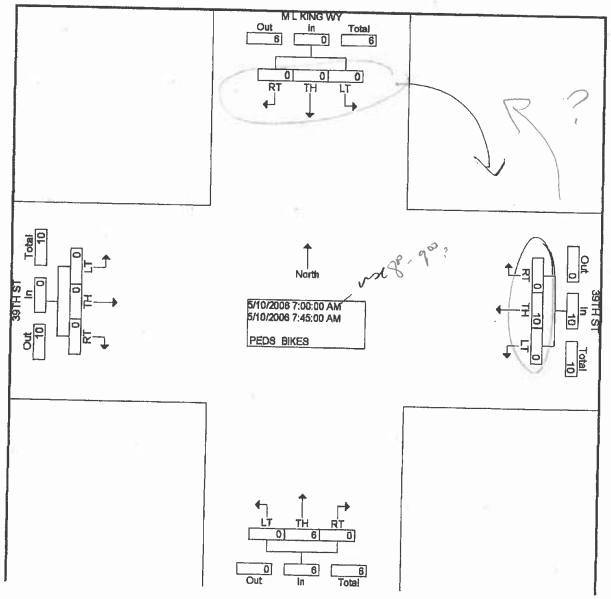

MARKS TRAFFIC DATA

PM 03
OAKLAND
FPW EK
TITO [916] 715-4006

File Name : shattck-51st-pm
Site Code : 00000000
Start Date : 5/16/2006
Page No : 1

Groups Printed- VEHICLES ONLY

	SHATTUCK AV Southbound				51 st 52 nd Westbound				SHATTUCK AV Northbound				51 ST 52 ND Eastbound				
Start Time	RT	TH	LT	App. Total	RT	TH	LT	App. Total	RT	TH	LT	App. Total	RT	TH	LT	App. Total	Int. Total
Factor	1.0	1.0	1.0		1.0	1.0	1.0		1.0	1.0	1.0		1.0	1.0	1.0		
16:00	90	44	28	162	36	214	9	259	8	32	50	90	41	214	62	317	828
16:15	78	53	24	155	11	216	17	244	5	43	25	73	38	213	94	345	817
16:30	54	37	28	119	16	208	17	241	19	42	28	89	54	241	100	395	844
16:45	71	60	30	161	28	219	21	268	12	52	36	100	42	268	106	416	945
Total	293	194	110	597	91	857	64	1012	44	169	139	352	175	936	362	1473	3434
17:00	69	69	39	177	32	231	30	293	22	63	44	129	59	322	59	440	1039
17:15	79	73	31	183	44	248	19	311	27	69	56	152	44	315	101	460	1106
17:30	61	63	39	163	41	228	22	291	19	50	39	108	39	306	89	434	996
17:45	50	51	24	125	21	251	9	281	11	43	26	80	21	283	73	377	863
Total	259	256	133	648	138	958	80	1176	79	225	165	469	163	1226	322	1711	4004
Grand Total	552	450	243	1245	229	1815	144	2188	123	394	304	821	338	2162	684	3184	7438
Apprch %	44.3	36.1	19.5		10.5	83	6.6		15	48	37		10.6	67.9	21.5		
Total %	7.4	6.1	3.3	16.7	3.1	24.4	1.9	29.4	1.7	5.3	4.1	11	4.5	29.1	9.2	42.8	

	SHATTUCK AV Southbound				51 st 52 nd Westbound				SHATTUCK AV Northbound				51 ST 52 ND Eastbound				
Start Time	RT	TH	LT	App. Total	RT	TH	LT	App. Total	RT	TH	LT	App. Total	RT	TH	LT	App. Total	Int. Total
Peak Hour Analysis From 16:00 to 17:45 - Peak 1 of 1																	
Peak Hour for Entire Intersection Begins at 16:45																	
16:45	71	60	30	161	28	219	21	268	12	52	36	100	42	268	**106**	416	945
17:00	69	69	**39**	177	32	231	**30**	293	22	63	44	129	**59**	**322**	59	440	1039
17:15	**79**	**73**	31	**183**	**44**	**248**	19	**311**	**27**	**69**	**56**	**152**	44	315	101	**460**	**1106**
17:30	61	63	39	163	41	228	22	291	19	50	39	108	39	306	89	434	996
Total Volume	280	265	139	684	145	926	92	1163	80	234	175	489	184	1211	355	1750	4086
% App. Total	40.9	38.7	20.3		12.5	79.6	7.9		16.4	47.9	35.8		10.5	69.2	20.3		
PHF	.886	.908	.891	.934	.824	.933	.767	.935	.741	.848	.781	.804	.780	.940	.837	.951	.924

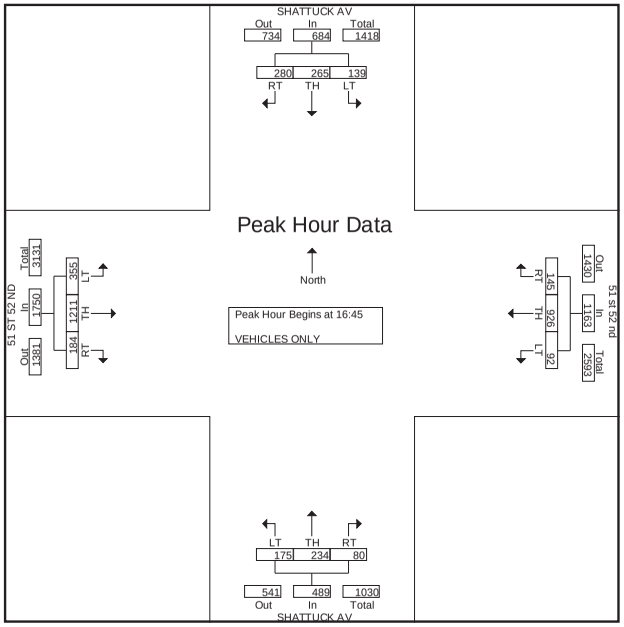

MARKS TRAFFIC DATA

PM 04
OAKLAND
FPW H
TITO [916] 715-4006

File Name : telegraph-52nd-p
Site Code : 00000000
Start Date : 5/11/2006
Page No : 1

Groups Printed- VEHICLES ONLY

	TELEGRAPH AVE Southbound				52 nd CLAREMENT Westbound				TELEGRAPH AVE Northbound				52 nd CLAREMENT Eastbound				
Start Time	RT	TH	LT	App. Total	RT	TH	LT	App. Total	RT	TH	LT	App. Total	RT	TH	LT	App. Total	Int. Total
Factor	1.0	1.0	1.0		1.0	1.0	1.0		1.0	1.0	1.0		1.0	1.0	1.0		
16:00	72	160	34	266	23	24	24	71	32	216	3	251	3	3	3	9	597
16:15	89	156	23	268	44	14	19	77	53	213	2	268	8	1	4	13	626
16:30	76	151	18	245	32	31	24	87	52	244	5	301	4	2	3	9	642
16:45	70	183	28	281	24	21	30	75	49	236	5	290	7	1	3	11	657
Total	307	650	103	1060	123	90	97	310	186	909	15	1110	22	7	13	42	2522
17:00	87	173	20	280	31	23	24	78	64	229	1	294	5	0	2	7	659
17:15	73	179	24	276	29	30	25	84	48	244	5	297	6	1	6	13	670
17:30	84	193	25	302	36	11	24	71	75	243	2	320	4	1	2	7	700
17:45	64	179	29	272	22	18	25	65	72	208	2	282	6	1	2	9	628
Total	308	724	98	1130	118	82	98	298	259	924	10	1193	21	3	12	36	2657
Grand Total	615	1374	201	2190	241	172	195	608	445	1833	25	2303	43	10	25	78	5179
Apprch %	28.1	62.7	9.2		39.6	28.3	32.1		19.3	79.6	1.1		55.1	12.8	32.1		
Total %	11.9	26.5	3.9	42.3	4.7	3.3	3.8	11.7	8.6	35.4	0.5	44.5	0.8	0.2	0.5	1.5	

	TELEGRAPH AVE Southbound				52 nd CLAREMENT Westbound				TELEGRAPH AVE Northbound				52 nd CLAREMENT Eastbound				
Start Time	RT	TH	LT	App. Total	RT	TH	LT	App. Total	RT	TH	LT	App. Total	RT	TH	LT	App. Total	Int. Total
Peak Hour Analysis From 16:00 to 17:45 - Peak 1 of 1																	
Peak Hour for Entire Intersection Begins at 16:45																	
16:45	70	183	**28**	281	24	21	**30**	75	49	236	**5**	290	**7**	**1**	3	11	657
17:00	**87**	173	20	280	31	23	24	78	64	229	1	294	5	0	2	7	659
17:15	73	179	24	276	29	**30**	25	**84**	48	**244**	5	297	6	1	**6**	**13**	670
17:30	84	**193**	25	**302**	**36**	11	24	71	**75**	243	2	**320**	4	1	2	7	**700**
Total Volume	314	728	97	1139	120	85	103	308	236	952	13	1201	22	3	13	38	2686
% App. Total	27.6	63.9	8.5		39	27.6	33.4		19.7	79.3	1.1		57.9	7.9	34.2		
PHF	.902	.943	.866	.943	.833	.708	.858	.917	.787	.975	.650	.938	.786	.750	.542	.731	.959

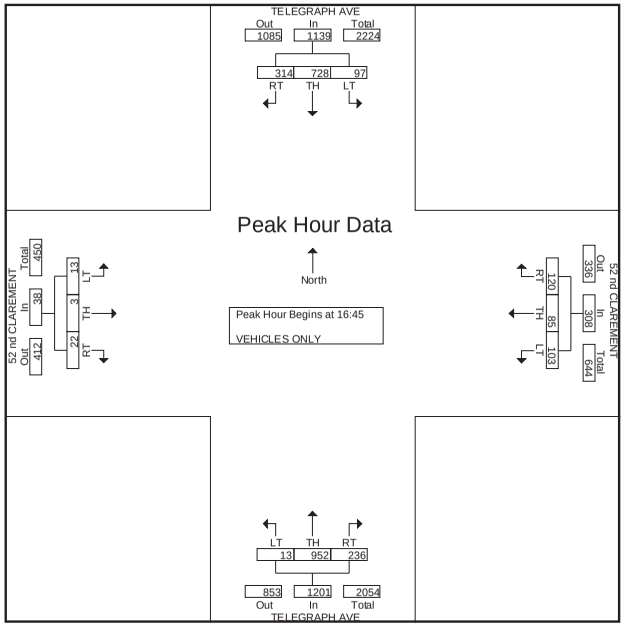

MARKS TRAFFIC DATA

PM 05
OAKLAND
FPW C
TITO [916] 715-4006

File Name : telegraph-51st-p
Site Code : 00000000
Start Date : 5/23/2006
Page No : 1

Groups Printed- VEHICLES ONLY

	TELEGRAPH AVE Southbound				51 st ST Westbound				TELEGRAPH AVE Northbound				51 st ST Eastbound				
Start Time	RT	TH	LT	App. Total	RT	TH	LT	App. Total	RT	TH	LT	App. Total	RT	TH	LT	App. Total	Int. Total
Factor	1.0	1.0	1.0		1.0	1.0	1.0		1.0	1.0	1.0		1.0	1.0	1.0		
16:00	13	109	39	161	26	81	9	116	10	82	18	110	8	132	72	212	599
16:15	18	121	28	167	20	99	11	130	16	109	29	154	9	141	61	211	662
16:30	18	139	38	195	37	109	16	162	22	106	31	159	11	142	88	241	757
16:45	19	142	40	201	39	116	17	172	18	103	26	147	15	154	96	265	785
Total	68	511	145	724	122	405	53	580	66	400	104	570	43	569	317	929	2803
17:00	22	168	69	259	48	119	18	185	20	154	20	194	22	175	108	305	943
17:15	14	162	58	234	55	117	26	198	34	145	17	196	16	174	112	302	930
17:30	11	173	44	228	60	121	30	211	41	155	19	215	12	181	121	314	968
17:45	9	151	32	192	49	111	19	179	32	121	13	166	9	162	112	283	820
Total	56	654	203	913	212	468	93	773	127	575	69	771	59	692	453	1204	3661
Grand Total	124	1165	348	1637	334	873	146	1353	193	975	173	1341	102	1261	770	2133	6464
Apprch %	7.6	71.2	21.3		24.7	64.5	10.8		14.4	72.7	12.9		4.8	59.1	36.1		
Total %	1.9	18	5.4	25.3	5.2	13.5	2.3	20.9	3	15.1	2.7	20.7	1.6	19.5	11.9	33	

	TELEGRAPH AVE Southbound				51 st ST Westbound				TELEGRAPH AVE Northbound				51 st ST Eastbound				
Start Time	RT	TH	LT	App. Total	RT	TH	LT	App. Total	RT	TH	LT	App. Total	RT	TH	LT	App. Total	Int. Total
Peak Hour Analysis From 16:00 to 17:45 - Peak 1 of 1																	
Peak Hour for Entire Intersection Begins at 17:00																	
17:00	**22**	168	**69**	**259**	48	119	18	185	20	154	**20**	194	**22**	175	108	305	943
17:15	14	162	58	234	55	117	26	198	34	145	17	196	16	174	112	302	930
17:30	11	**173**	44	228	**60**	**121**	**30**	**211**	**41**	**155**	19	**215**	12	**181**	**121**	**314**	**968**
17:45	9	151	32	192	49	111	19	179	32	121	13	166	9	162	112	283	820
Total Volume	56	654	203	913	212	468	93	773	127	575	69	771	59	692	453	1204	3661
% App. Total	6.1	71.6	22.2		27.4	60.5	12		16.5	74.6	8.9		4.9	57.5	37.6		
PHF	.636	.945	.736	.881	.883	.967	.775	.916	.774	.927	.863	.897	.670	.956	.936	.959	.946

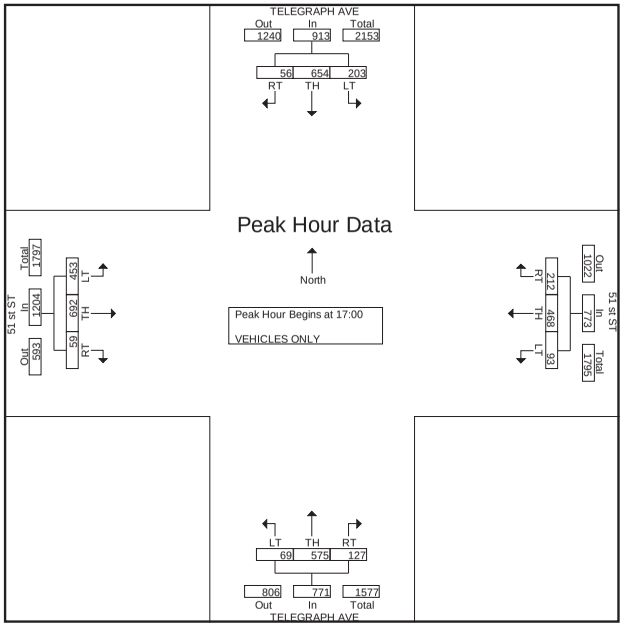

MARKS TRAFFIC DATA

PM 06
OAKLAND
FPW C
TITO [916] 715-4006

File Name : ml-kink47th-p
Site Code : 00000000
Start Date : 5/11/2006
Page No : 1

Groups Printed- VEHICLES ONLY

	M L KING WY Southbound				0 Westbound				M L KING WY Northbound				47TH ST Eastbound				
Start Time	RT	TH	LT	App. Total	RT	TH	LT	App. Total	24 on	TH	LT	App. Total	RT	TH	LT	App. Total	Int. Total
Factor	1.0	1.0	1.0		1.0	1.0	1.0		1.0	1.0	1.0		1.0	1.0	1.0		
16:00	4	62	366	432	0	0	0	0	39	56	0	95	2	0	0	2	529
16:15	2	62	402	466	0	0	0	0	52	55	0	107	6	0	0	6	579
16:30	5	71	362	438	0	0	0	0	57	69	5	131	3	0	0	3	572
16:45	10	50	331	391	0	0	0	0	63	78	2	143	0	0	0	0	534
Total	21	245	1461	1727	0	0	0	0	211	258	7	476	11	0	0	11	2214
17:00	12	68	373	453	0	0	0	0	73	89	0	162	2	0	0	2	617
17:15	16	72	392	480	0	0	0	0	68	72	3	143	4	0	0	4	627
17:30	17	79	343	439	0	0	0	0	52	65	7	124	0	0	0	0	563
17:45	19	62	322	403	0	0	0	0	48	54	0	102	0	0	0	0	505
Total	64	281	1430	1775	0	0	0	0	241	280	10	531	6	0	0	6	2312
Grand Total	85	526	2891	3502	0	0	0	0	452	538	17	1007	17	0	0	17	4526
Apprch %	2.4	15	82.6		0	0	0		44.9	53.4	1.7		100	0	0		
Total %	1.9	11.6	63.9	77.4	0	0	0	0	10	11.9	0.4	22.2	0.4	0	0	0.4	

	M L KING WY Southbound				0 Westbound				M L KING WY Northbound				47TH ST Eastbound				
Start Time	RT	TH	LT	App. Total	RT	TH	LT	App. Total	24 on	TH	LT	App. Total	RT	TH	LT	App. Total	Int. Total
Peak Hour Analysis From 16:00 to 17:45 - Peak 1 of 1																	
Peak Hour for Entire Intersection Begins at 16:30																	
16:30	5	71	362	438	0	0	0	0	57	69	**5**	131	3	0	0	3	572
16:45	10	50	331	391	0	0	0	0	63	78	2	143	0	0	0	0	534
17:00	12	68	373	453	0	0	0	0	**73**	**89**	0	**162**	2	0	0	2	617
17:15	**16**	**72**	**392**	**480**	0	0	0	0	68	72	3	143	**4**	0	0	**4**	**627**
Total Volume	43	261	1458	1762	0	0	0	0	261	308	10	579	9	0	0	9	2350
% App. Total	2.4	14.8	82.7		0	0	0		45.1	53.2	1.7		100	0	0		
PHF	.672	.906	.930	.918	.000	.000	.000	.000	.894	.865	.500	.894	.563	.000	.000	.563	.937

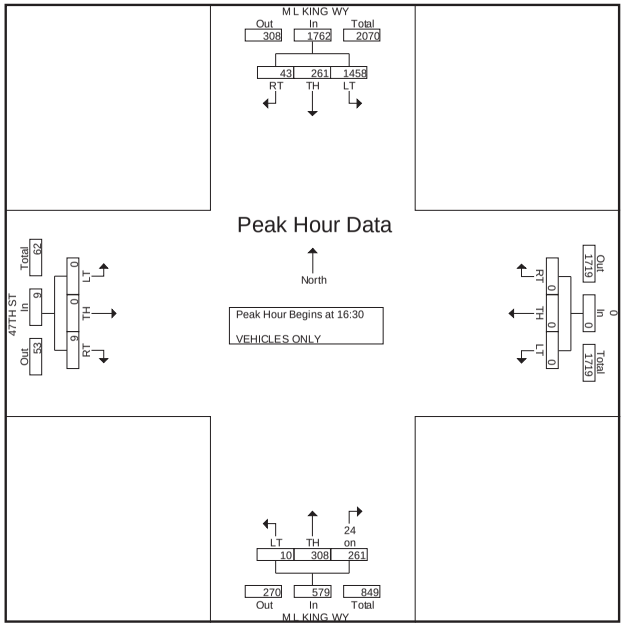

MARKS TRAFFIC DATA

PM 07
OAKLAND
FPW A
TITO [916] 715-4006

File Name : ml-king-45th-p
Site Code : 00000000
Start Date : 5/16/2006
Page No : 1

Groups Printed- VEHICLES ONLY

	M L KING WY Southbound				45 TH ST Westbound				M L KING WY Northbound				45 TH ST Eastbound				
Start Time	RT	TH	LT	App. Total	RT	TH	LT	App. Total	RT	TH	LT	App. Total	RT	TH	LT	App. Total	Int. Total
Factor	1.0	1.0	1.0		1.0	1.0	1.0		1.0	1.0	1.0		1.0	1.0	1.0		
16:00	0	43	10	53	8	6	11	25	8	71	0	79	1	3	5	9	166
16:15	1	51	11	63	9	12	6	27	10	88	2	100	3	7	4	14	204
16:30	2	53	8	63	5	11	6	22	8	86	4	98	3	6	7	16	199
16:45	2	58	11	71	8	12	6	26	12	95	6	113	3	9	11	23	233
Total	5	205	40	250	30	41	29	100	38	340	12	390	10	25	27	62	802
17:00	4	62	13	79	12	20	15	47	18	99	4	121	6	11	10	27	274
17:15	7	75	14	96	19	26	15	60	21	112	7	140	8	9	6	23	319
17:30	6	68	9	83	10	17	10	37	16	106	4	126	4	4	8	16	262
17:45	3	52	7	62	9	9	8	26	11	82	2	95	2	3	2	7	190
Total	20	257	43	320	50	72	48	170	66	399	17	482	20	27	26	73	1045
Grand Total	25	462	83	570	80	113	77	270	104	739	29	872	30	52	53	135	1847
Apprch %	4.4	81.1	14.6		29.6	41.9	28.5		11.9	84.7	3.3		22.2	38.5	39.3		
Total %	1.4	25	4.5	30.9	4.3	6.1	4.2	14.6	5.6	40	1.6	47.2	1.6	2.8	2.9	7.3	

	M L KING WY Southbound				45 TH ST Westbound				M L KING WY Northbound				45 TH ST Eastbound				
Start Time	RT	TH	LT	App. Total	RT	TH	LT	App. Total	RT	TH	LT	App. Total	RT	TH	LT	App. Total	Int. Total
Peak Hour Analysis From 16:00 to 17:45 - Peak 1 of 1																	
Peak Hour for Entire Intersection Begins at 16:45																	
16:45	2	58	11	71	8	12	6	26	12	95	6	113	3	9	**11**	23	233
17:00	4	62	13	79	12	20	**15**	47	18	99	4	121	6	**11**	10	**27**	274
17:15	**7**	**75**	**14**	**96**	**19**	**26**	15	**60**	**21**	**112**	**7**	**140**	**8**	9	6	23	**319**
17:30	6	68	9	83	10	17	10	37	16	106	4	126	4	4	8	16	262
Total Volume	19	263	47	329	49	75	46	170	67	412	21	500	21	33	35	89	1088
% App. Total	5.8	79.9	14.3		28.8	44.1	27.1		13.4	82.4	4.2		23.6	37.1	39.3		
PHF	.679	.877	.839	.857	.645	.721	.767	.708	.798	.920	.750	.893	.656	.750	.795	.824	.853

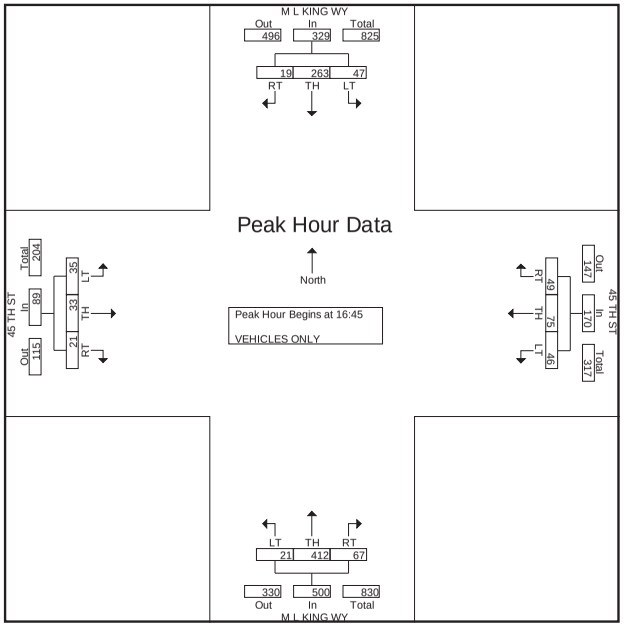

MARKS TRAFFIC DATA

PM 08
OAKLAND
FPW A
TITO [916] 715-4006

File Name : telegraph-45hh-p
Site Code : 00000000
Start Date : 5/11/2006
Page No : 1

Groups Printed- VEHICLES ONLY

	TELEGRAPH AVE Southbound				45 th ST Westbound				TELEGRAPH AVE Northbound				45 th ST Eastbound				
Start Time	RT	TH	LT	App. Total	RT	TH	LT	App. Total	RT	TH	LT	App. Total	RT	TH	LT	App. Total	Int. Total
Factor	1.0	1.0	1.0		1.0	1.0	1.0		1.0	1.0	1.0		1.0	1.0	1.0		
16:00	8	180	2	190	5	6	3	14	2	162	5	169	7	5	8	20	393
16:15	13	179	1	193	6	12	6	24	0	189	4	193	11	2	9	22	432
16:30	2	199	3	204	8	8	4	20	1	212	3	216	6	3	12	21	461
16:45	17	250	2	269	4	8	5	17	2	239	4	245	5	2	14	21	552
Total	40	808	8	856	23	34	18	75	5	802	16	823	29	12	43	84	1838
17:00	17	232	5	254	5	9	9	23	11	250	3	264	8	7	15	30	571
17:15	15	210	6	231	4	11	5	20	5	258	7	270	5	9	17	31	552
17:30	20	232	4	256	8	12	0	20	12	261	8	281	19	20	4	43	600
17:45	15	199	3	217	4	9	3	16	9	249	6	264	7	13	10	30	527
Total	67	873	18	958	21	41	17	79	37	1018	24	1079	39	49	46	134	2250
Grand Total	107	1681	26	1814	44	75	35	154	42	1820	40	1902	68	61	89	218	4088
Apprch %	5.9	92.7	1.4		28.6	48.7	22.7		2.2	95.7	2.1		31.2	28	40.8		
Total %	2.6	41.1	0.6	44.4	1.1	1.8	0.9	3.8	1	44.5	1	46.5	1.7	1.5	2.2	5.3	

	TELEGRAPH AVE Southbound				45 th ST Westbound				TELEGRAPH AVE Northbound				45 th ST Eastbound				
Start Time	RT	TH	LT	App. Total	RT	TH	LT	App. Total	RT	TH	LT	App. Total	RT	TH	LT	App. Total	Int. Total
Peak Hour Analysis From 16:00 to 17:45 - Peak 1 of 1																	
Peak Hour for Entire Intersection Begins at 16:45																	
16:45	17	**250**	2	**269**	4	8	5	17	2	239	4	245	5	2	14	21	552
17:00	17	232	5	254	5	9	**9**	**23**	11	250	3	264	8	7	15	30	571
17:15	15	210	**6**	231	4	11	5	20	5	258	7	270	5	9	**17**	31	552
17:30	**20**	232	4	256	**8**	**12**	0	20	**12**	**261**	**8**	**281**	**19**	**20**	4	**43**	**600**
Total Volume	69	924	17	1010	21	40	19	80	30	1008	22	1060	37	38	50	125	2275
% App. Total	6.8	91.5	1.7		26.2	50	23.8		2.8	95.1	2.1		29.6	30.4	40		
PHF	.863	.924	.708	.939	.656	.833	.528	.870	.625	.966	.688	.943	.487	.475	.735	.727	.948

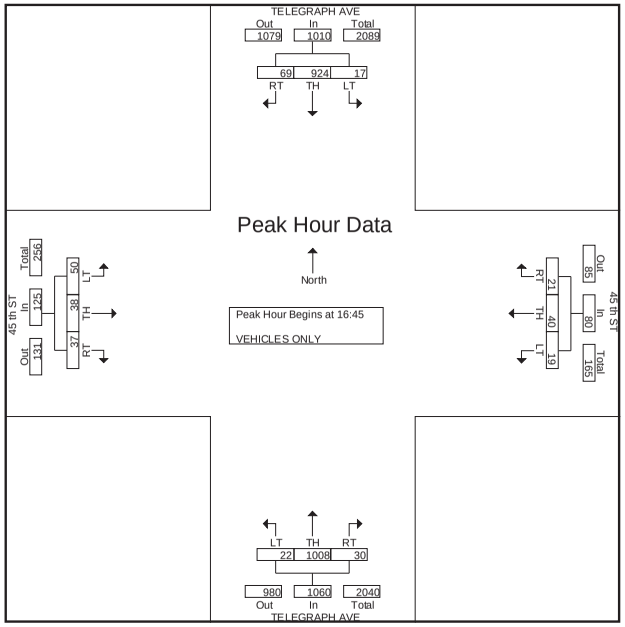

MARKS TRAFFIC DATA

PM 09
OAKLAND
FPW J
TITO [916] 715-4006

File Name : market-40-p
Site Code : 00000000
Start Date : 5/9/2006
Page No : 1

Groups Printed- VEHICLES ONLY

	MARKET ST Southbound				40TH ST Westbound				MARKET ST Northbound				40TH ST Eastbound				
Start Time	RT	TH	LT	App. Total	RT	TH	LT	App. Total	RT	TH	LT	App. Total	RT	TH	LT	App. Total	Int. Total
Factor	1.0	1.0	1.0		1.0	1.0	1.0		1.0	1.0	1.0		1.0	1.0	1.0		
16:00	4	50	19	73	16	105	8	129	3	54	13	70	11	131	9	151	423
16:15	5	51	10	66	13	97	9	119	2	49	23	74	10	138	7	155	414
16:30	5	49	14	68	21	94	8	123	2	87	26	115	7	140	8	155	461
16:45	4	66	17	87	22	109	3	134	7	86	39	132	11	148	5	164	517
Total	18	216	60	294	72	405	28	505	14	276	101	391	39	557	29	625	1815
17:00	3	55	19	77	13	148	5	166	9	113	32	154	10	179	9	198	595
17:15	6	57	21	84	23	109	15	147	7	107	29	143	12	153	6	171	545
17:30	5	62	23	90	16	104	9	129	9	81	19	109	11	158	5	174	502
17:45	5	48	25	78	21	120	8	149	13	87	29	129	12	165	6	183	539
Total	19	222	88	329	73	481	37	591	38	388	109	535	45	655	26	726	2181
Grand Total	37	438	148	623	145	886	65	1096	52	664	210	926	84	1212	55	1351	3996
Apprch %	5.9	70.3	23.8		13.2	80.8	5.9		5.6	71.7	22.7		6.2	89.7	4.1		
Total %	0.9	11	3.7	15.6	3.6	22.2	1.6	27.4	1.3	16.6	5.3	23.2	2.1	30.3	1.4	33.8	

	MARKET ST Southbound				40TH ST Westbound				MARKET ST Northbound				40TH ST Eastbound				
Start Time	RT	TH	LT	App. Total	RT	TH	LT	App. Total	RT	TH	LT	App. Total	RT	TH	LT	App. Total	Int. Total
Peak Hour Analysis From 16:00 to 17:45 - Peak 1 of 1																	
Peak Hour for Entire Intersection Begins at 17:00																	
17:00	3	55	19	77	13	**148**	5	**166**	9	**113**	**32**	**154**	10	**179**	**9**	**198**	**595**
17:15	**6**	57	21	84	**23**	109	**15**	147	7	107	29	143	**12**	153	6	171	545
17:30	5	**62**	23	**90**	16	104	9	129	9	81	19	109	11	158	5	174	502
17:45	5	48	**25**	78	21	120	8	149	**13**	87	29	129	12	165	6	183	539
Total Volume	19	222	88	329	73	481	37	591	38	388	109	535	45	655	26	726	2181
% App. Total	5.8	67.5	26.7		12.4	81.4	6.3		7.1	72.5	20.4		6.2	90.2	3.6		
PHF	.792	.895	.880	.914	.793	.813	.617	.890	.731	.858	.852	.869	.938	.915	.722	.917	.916

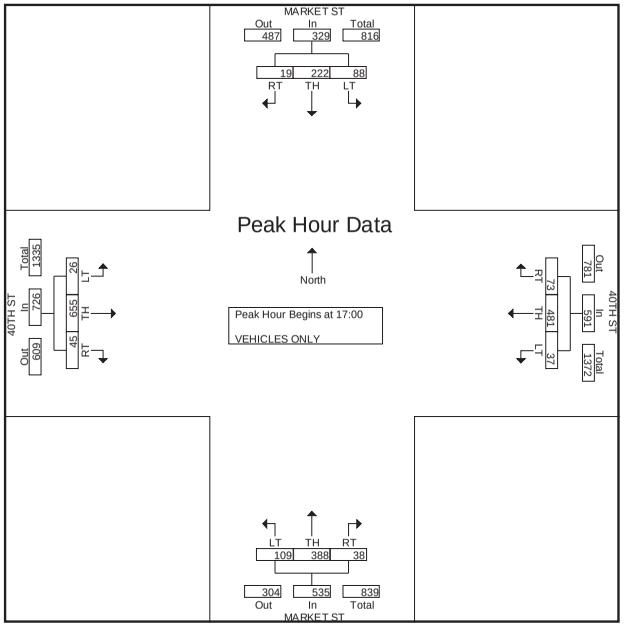

MARKS TRAFFIC DATA

PM 10
OAKLAND
FPW H
TITO [916] 715-4006

File Name : west-40th-p
Site Code : 00000000
Start Date : 5/9/2006
Page No : 1

Groups Printed- VEHICLES ONLY

	WESI ST Southbound				40TH ST Westbound				WESI ST Northbound				40TH ST Eastbound				
Start Time	RT	TH	LT	App. Total	RT	TH	LT	App. Total	RT	TH	LT	App. Total	RT	TH	LT	App. Total	Int. Total
Factor	1.0	1.0	1.0		1.0	1.0	1.0		1.0	1.0	1.0		1.0	1.0	1.0		
16:00	8	26	3	37	6	93	6	105	2	24	28	54	17	131	5	153	349
16:15	7	25	2	34	5	109	11	125	8	33	21	62	14	148	14	176	397
16:30	7	15	9	31	3	107	7	117	6	37	16	59	11	140	2	153	360
16:45	4	23	4	31	4	117	4	125	4	35	16	55	10	158	2	170	381
Total	26	89	18	133	18	426	28	472	20	129	81	230	52	577	23	652	1487
17:00	9	25	3	37	6	140	7	153	8	40	14	62	25	177	7	209	461
17:15	8	31	6	45	5	123	3	131	10	39	36	85	12	186	5	203	464
17:30	7	18	4	29	9	127	4	140	11	41	11	63	9	179	9	197	429
17:45	9	22	3	34	4	115	3	122	8	44	13	65	14	201	5	220	441
Total	33	96	16	145	24	505	17	546	37	164	74	275	60	743	26	829	1795
Grand Total	59	185	34	278	42	931	45	1018	57	293	155	505	112	1320	49	1481	3282
Apprch %	21.2	66.5	12.2		4.1	91.5	4.4		11.3	58	30.7		7.6	89.1	3.3		
Total %	1.8	5.6	1	8.5	1.3	28.4	1.4	31	1.7	8.9	4.7	15.4	3.4	40.2	1.5	45.1	

	WESI ST Southbound				40TH ST Westbound				WESI ST Northbound				40TH ST Eastbound				
Start Time	RT	TH	LT	App. Total	RT	TH	LT	App. Total	RT	TH	LT	App. Total	RT	TH	LT	App. Total	Int. Total
Peak Hour Analysis From 16:00 to 17:45 - Peak 1 of 1																	
Peak Hour for Entire Intersection Begins at 17:00																	
17:00	**9**	25	3	37	6	**140**	**7**	**153**	8	40	14	62	**25**	177	7	209	461
17:15	8	**31**	**6**	**45**	5	123	3	131	10	39	**36**	**85**	12	186	5	203	**464**
17:30	7	18	4	29	**9**	127	4	140	**11**	41	11	63	9	179	**9**	197	429
17:45	9	22	3	34	4	115	3	122	8	**44**	13	65	14	**201**	5	**220**	441
Total Volume	33	96	16	145	24	505	17	546	37	164	74	275	60	743	26	829	1795
% App. Total	22.8	66.2	11		4.4	92.5	3.1		13.5	59.6	26.9		7.2	89.6	3.1		
PHF	.917	.774	.667	.806	.667	.902	.607	.892	.841	.932	.514	.809	.600	.924	.722	.942	.967

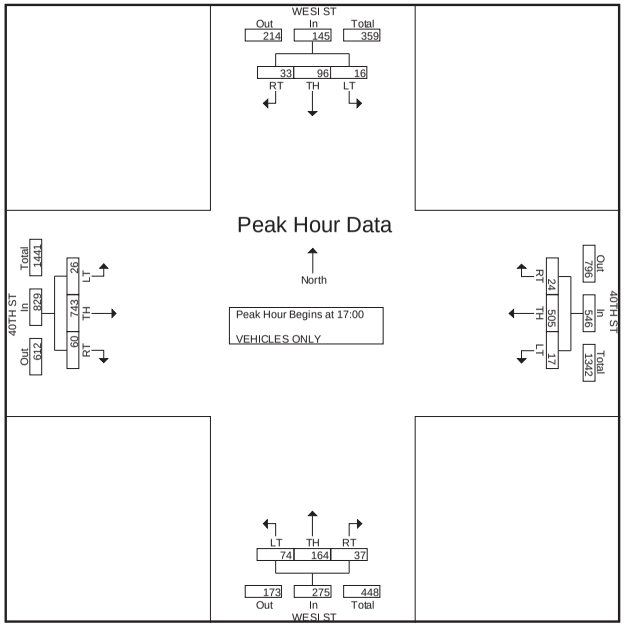

MARKS TRAFFIC DATA

PM 11
OAKLAND
FPW B
TITO [916] 715-4006

File Name : king-40st-p20
Site Code : 00000000
Start Date : 6/20/2006
Page No : 1

Groups Printed- VEHICLES ONLY

	MLK JR WAY Southbound					40 ST Westbound					MLK JR WAY Northbound					40 ST Eastbound							
Start Time	RT	TH	LT	PED	App. Total	RT	TH	LT	PED	App. Total	RT	TH	LT	PED	App. Total	RT	TH	LT	PED	App. Total	Exclu. Total	Inclu. Total	Int. Total
16:00	9	33	17	0	59	23	121	10	0	154	25	56	10	0	91	9	129	12	0	150	0	454	454
16:15	10	23	15	0	48	15	108	11	0	134	23	62	12	0	97	14	137	6	0	157	0	436	436
16:30	7	35	18	0	60	20	115	14	0	149	18	58	13	0	89	6	138	11	0	155	0	453	453
16:45	2	35	22	0	59	21	101	10	0	132	29	84	10	0	123	4	139	6	0	149	0	463	463
Total	28	126	72	0	226	79	445	45	0	569	95	260	45	0	400	33	543	35	0	611	0	1806	1806
17:00	6	23	11	0	40	28	135	9	0	172	24	80	22	0	126	15	150	10	0	175	0	513	513
17:15	15	37	28	0	80	16	99	3	0	118	23	67	12	0	102	10	195	16	0	221	0	521	521
17:30	13	38	19	0	70	15	107	14	0	136	42	62	11	0	115	8	162	14	0	184	0	505	505
17:45	4	37	20	0	61	13	102	13	0	128	50	69	11	0	130	7	186	11	0	204	0	523	523
Total	38	135	78	0	251	72	443	39	0	554	139	278	56	0	473	40	693	51	0	784	0	2062	2062
Grand Total	66	261	150	0	477	151	888	84	0	1123	234	538	101	0	873	73	1236	86	0	1395	0	3868	3868
Apprch %	13.8	54.7	31.4			13.4	79.1	7.5			26.8	61.6	11.6			5.2	88.6	6.2					
Total %	1.7	6.7	3.9		12.3	3.9	23	2.2		29	6	13.9	2.6		22.6	1.9	32	2.2		36.1	0	100	

	MLK JR WAY Southbound				40 ST Westbound				MLK JR WAY Northbound				40 ST Eastbound				
Start Time	RT	TH	LT	App. Total	RT	TH	LT	App. Total	RT	TH	LT	App. Total	RT	TH	LT	App. Total	Int. Total
Peak Hour Analysis From 16:00 to 17:45 - Peak 1 of 1																	
Peak Hour for Entire Intersection Begins at 17:00																	
17:00	6	23	11	40	**28**	**135**	9	**172**	24	**80**	**22**	126	**15**	150	10	175	513
17:15	**15**	37	**28**	**80**	16	99	3	118	23	67	12	102	10	**195**	**16**	**221**	521
17:30	13	**38**	19	70	15	107	**14**	136	42	62	11	115	8	162	14	184	505
17:45	4	37	20	61	13	102	13	128	**50**	69	11	**130**	7	186	11	204	**523**
Total Volume	38	135	78	251	72	443	39	554	139	278	56	473	40	693	51	784	2062
% App. Total	15.1	53.8	31.1		13	80	7		29.4	58.8	11.8		5.1	88.4	6.5		
PHF	.633	.888	.696	.784	.643	.820	.696	.805	.695	.869	.636	.910	.667	.888	.797	.887	.986

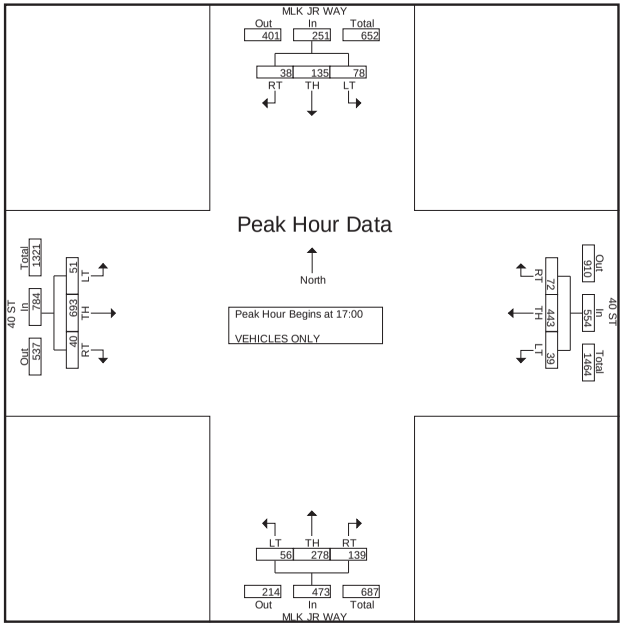

MARKS TRAFFIC DATA

PM 12
OAKLAND
FPW L
TITO [916] 715-4006

File Name : dw-12-p-20
Site Code : 00000000
Start Date : 6/20/2006
Page No : 1

Groups Printed- VEHICLES ONLY

	0 Southbound				40 th ST Westbound				0 Northbound				40 th ST Eastbound				
Start Time	RT	TH	LT	App. Total	RT	TH	LT	App. Total	RT	TH	LT	App. Total	RT	TH	LT	App. Total	Int. Total
16:00	0	0	0	0	0	131	6	137	0	0	0	0	15	129	1	145	282
16:15	0	0	0	0	0	128	4	132	0	0	0	0	18	141	3	162	294
16:30	0	0	0	0	0	139	11	150	0	0	0	0	21	165	4	190	340
16:45	0	0	0	0	0	142	9	151	0	0	0	0	22	182	8	212	363
Total	0	0	0	0	0	540	30	570	0	0	0	0	76	617	16	709	1279
17:00	0	0	0	0	0	159	15	174	0	0	0	0	19	183	7	209	383
17:15	0	0	0	0	0	131	15	146	0	0	0	0	27	172	5	204	350
17:30	0	0	0	0	0	141	20	161	0	0	0	0	18	201	4	223	384
17:45	0	0	0	0	0	129	21	150	0	0	0	0	13	212	3	228	378
Total	0	0	0	0	0	560	71	631	0	0	0	0	77	768	19	864	1495
Grand Total	0	0	0	0	0	1100	101	1201	0	0	0	0	153	1385	35	1573	2774
Apprch %	0	0	0		0	91.6	8.4		0	0	0		9.7	88	2.2		
Total %	0	0	0	0	0	39.7	3.6	43.3	0	0	0	0	5.5	49.9	1.3	56.7	

	0 Southbound				40 th ST Westbound				0 Northbound				40 th ST Eastbound				
Start Time	RT	TH	LT	App. Total	RT	TH	LT	App. Total	RT	TH	LT	App. Total	RT	TH	LT	App. Total	Int. Total
Peak Hour Analysis From 16:00 to 17:45 - Peak 1 of 1																	
Peak Hour for Entire Intersection Begins at 17:00																	
17:00	0	0	0	0	0	**159**	15	**174**	0	0	0	0	19	183	**7**	209	383
17:15	0	0	0	0	0	131	15	146	0	0	0	0	**27**	172	5	204	350
17:30	0	0	0	0	0	141	20	161	0	0	0	0	18	201	4	223	**384**
17:45	0	0	0	0	0	129	**21**	150	0	0	0	0	13	**212**	3	**228**	378
Total Volume	0	0	0	0	0	560	71	631	0	0	0	0	77	768	19	864	1495
% App. Total	0	0	0		0	88.7	11.3		0	0	0		8.9	88.9	2.2		
PHF	.000	.000	.000	.000	.000	.881	.845	.907	.000	.000	.000	.000	.713	.906	.679	.947	.973

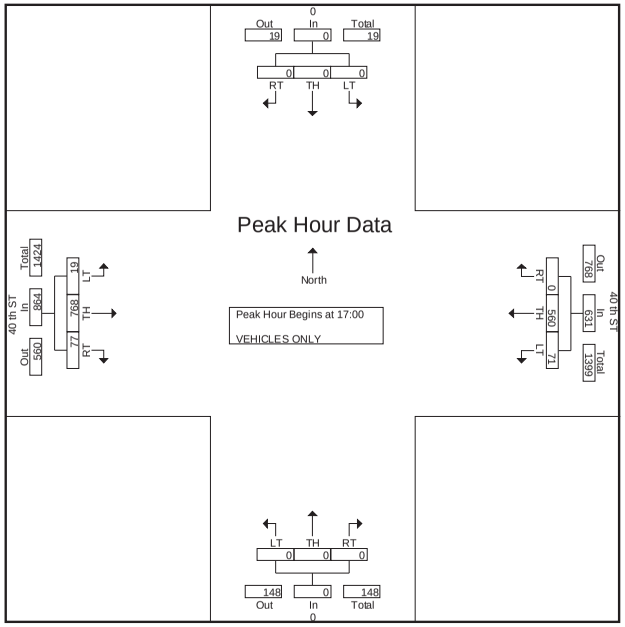

MARKS TRAFFIC DATA

PM 13
OAKLAND
FPW C
TITO [916] 715-4006

File Name : dw-13-p-20
Site Code : 00000000
Start Date : 6/20/2006
Page No : 1

Groups Printed- VEHICLES ONLY

	0 Southbound				40 th ST Westbound				0 Northbound				40 th ST Eastbound				
Start Time	RT	TH	LT	App. Total	RT	TH	LT	App. Total	RT	TH	LT	App. Total	RT	TH	LT	App. Total	Int. Total
16:00	0	0	0	0	0	137	0	137	4	0	0	4	2	127	0	129	270
16:15	0	0	0	0	0	132	0	132	8	0	0	8	8	133	0	141	281
16:30	0	0	0	0	0	150	0	150	9	0	0	9	15	149	0	164	323
16:45	0	0	0	0	0	153	0	153	8	0	0	8	17	135	0	152	313
Total	0	0	0	0	0	572	0	572	29	0	0	29	42	544	0	586	1187
17:00	0	0	0	0	0	171	0	171	12	0	0	12	21	161	0	182	365
17:15	0	0	0	0	0	146	0	146	13	0	0	13	18	154	0	172	331
17:30	0	0	0	0	0	162	0	162	22	0	0	22	24	176	0	200	384
17:45	0	0	0	0	0	159	0	159	24	0	0	24	15	197	0	212	395
Total	0	0	0	0	0	638	0	638	71	0	0	71	78	688	0	766	1475
Grand Total	0	0	0	0	0	1210	0	1210	100	0	0	100	120	1232	0	1352	2662
Apprch %	0	0	0		0	100	0		100	0	0		8.9	91.1	0		
Total %	0	0	0	0	0	45.5	0	45.5	3.8	0	0	3.8	4.5	46.3	0	50.8	

	0 Southbound				40 th ST Westbound				0 Northbound				40 th ST Eastbound				
Start Time	RT	TH	LT	App. Total	RT	TH	LT	App. Total	RT	TH	LT	App. Total	RT	TH	LT	App. Total	Int. Total
Peak Hour Analysis From 16:00 to 17:45 - Peak 1 of 1																	
Peak Hour for Entire Intersection Begins at 17:00																	
17:00	0	0	0	0	0	**171**	0	**171**	12	0	0	12	21	161	0	182	365
17:15	0	0	0	0	0	146	0	146	13	0	0	13	18	154	0	172	331
17:30	0	0	0	0	0	162	0	162	22	0	0	22	**24**	176	0	200	384
17:45	0	0	0	0	0	159	0	159	**24**	0	0	**24**	15	**197**	0	**212**	**395**
Total Volume	0	0	0	0	0	638	0	638	71	0	0	71	78	688	0	766	1475
% App. Total	0	0	0		0	100	0		100	0	0		10.2	89.8	0		
PHF	.000	.000	.000	.000	.000	.933	.000	.933	.740	.000	.000	.740	.813	.873	.000	.903	.934

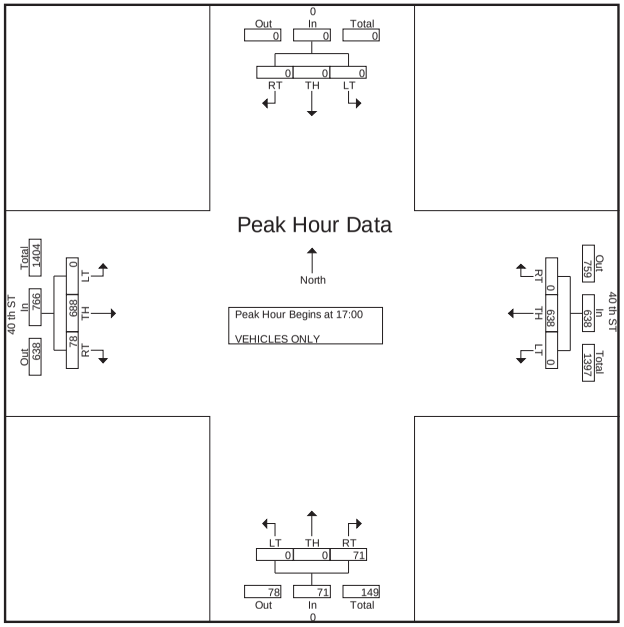

MARKS TRAFFIC DATA

PM 14
OAKLAND
FPW A
TITO [916] 715-4006

File Name : dw-14-40th-p
Site Code : 00000000
Start Date : 5/10/2006
Page No : 1

Groups Printed- VEHICLES ONLY

	0 Southbound				40 th ST Westbound				0 Northbound				40 th ST Eastbound				
Start Time	RT	TH	LT	App. Total	RT	TH	LT	App. Total	RT	TH	LT	App. Total	RT	TH	LT	App. Total	Int. Total
Factor	1.0	1.0	1.0		1.0	1.0	1.0		1.0	1.0	1.0		1.0	1.0	1.0		
16:00	0	0	0	0	0	142	0	142	2	0	0	2	0	114	0	114	258
16:15	0	0	0	0	0	167	0	167	7	0	0	7	0	120	0	120	294
16:30	0	0	0	0	0	172	0	172	7	0	0	7	0	110	0	110	289
16:45	0	0	0	0	0	182	0	182	5	0	0	5	0	117	0	117	304
Total	0	0	0	0	0	663	0	663	21	0	0	21	0	461	0	461	1145
17:00	0	0	0	0	0	202	0	202	15	0	0	15	1	160	0	161	378
17:15	0	0	0	0	1	216	0	217	6	0	0	6	1	230	0	231	454
17:30	0	0	0	0	0	202	0	202	17	0	0	17	1	229	0	230	449
17:45	0	0	0	0	0	176	0	176	16	0	0	16	0	194	0	194	386
Total	0	0	0	0	1	796	0	797	54	0	0	54	3	813	0	816	1667
Grand Total	0	0	0	0	1	1459	0	1460	75	0	0	75	3	1274	0	1277	2812
Apprch %	0	0	0		0.1	99.9	0		100	0	0		0.2	99.8	0		
Total %	0	0	0	0	0	51.9	0	51.9	2.7	0	0	2.7	0.1	45.3	0	45.4	

	0 Southbound				40 th ST Westbound				0 Northbound				40 th ST Eastbound				
Start Time	RT	TH	LT	App. Total	RT	TH	LT	App. Total	RT	TH	LT	App. Total	RT	TH	LT	App. Total	Int. Total
Peak Hour Analysis From 16:00 to 17:45 - Peak 1 of 1																	
Peak Hour for Entire Intersection Begins at 17:00																	
17:00	0	0	0	0	0	202	0	202	15	0	0	15	**1**	160	0	161	378
17:15	0	0	0	0	**1**	**216**	0	**217**	6	0	0	6	1	**230**	0	**231**	**454**
17:30	0	0	0	0	0	202	0	202	**17**	0	0	**17**	1	229	0	230	449
17:45	0	0	0	0	0	176	0	176	16	0	0	16	0	194	0	194	386
Total Volume	0	0	0	0	1	796	0	797	54	0	0	54	3	813	0	816	1667
% App. Total	0	0	0		0.1	99.9	0		100	0	0		0.4	99.6	0		
PHF	.000	.000	.000	.000	.250	.921	.000	.918	.794	.000	.000	.794	.750	.884	.000	.883	.918

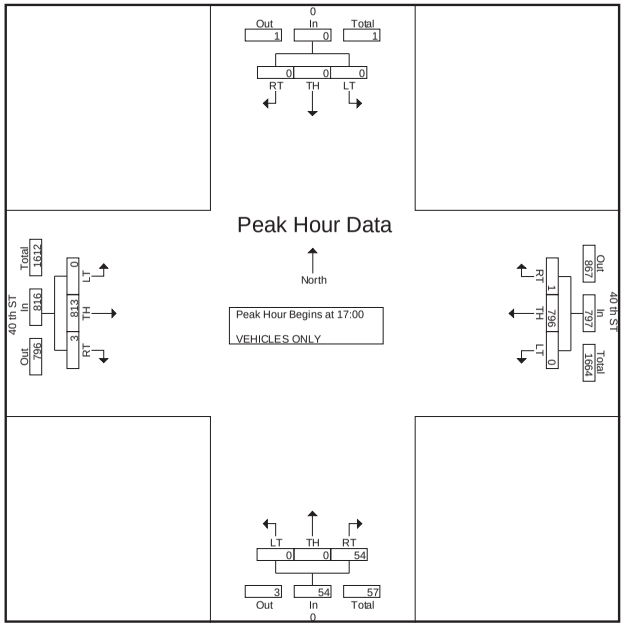

MARKS TRAFFIC DATA

PM 15
OAKLAND
FPW B
TITO [916] 715-4006

File Name : telegraph-40st-p2
Site Code : 00000000
Start Date : 6/15/2006
Page No : 1

Groups Printed- VEHICLES ONLY

	TELEGRAPH AVE Southbound				40 th ST Westbound				TELEGRAPH AVE Northbound				40 th ST Eastbound				
Start Time	RT	TH	LT	App. Total	RT	TH	LT	App. Total	RT	TH	LT	App. Total	RT	TH	LT	App. Total	Int. Total
16:00	33	129	15	177	24	80	11	115	4	143	30	177	22	107	25	154	623
16:15	31	133	25	189	17	74	7	98	2	162	23	187	31	100	34	165	639
16:30	36	131	28	195	17	93	6	116	13	176	33	222	28	124	41	193	726
16:45	36	128	27	191	18	82	9	109	11	170	37	218	28	138	43	209	727
Total	136	521	95	752	76	329	33	438	30	651	123	804	109	469	143	721	2715
17:00	31	158	22	211	21	95	7	123	15	203	35	253	23	120	36	179	766
17:15	22	132	33	187	18	94	5	117	14	212	46	272	24	184	34	242	818
17:30	36	141	31	208	18	86	6	110	11	211	32	254	25	172	40	237	809
17:45	27	128	17	172	19	91	5	115	18	184	38	240	34	189	49	272	799
Total	116	559	103	778	76	366	23	465	58	810	151	1019	106	665	159	930	3192
18:00	39	144	22	205	16	83	8	107	15	159	25	199	29	134	39	202	713
Grand Total	291	1224	220	1735	168	778	64	1010	103	1620	299	2022	244	1268	341	1853	6620
Apprch %	16.8	70.5	12.7		16.6	77	6.3		5.1	80.1	14.8		13.2	68.4	18.4		
Total %	4.4	18.5	3.3	26.2	2.5	11.8	1	15.3	1.6	24.5	4.5	30.5	3.7	19.2	5.2	28	

	TELEGRAPH AVE Southbound				40 th ST Westbound				TELEGRAPH AVE Northbound				40 th ST Eastbound				
Start Time	RT	TH	LT	App. Total	RT	TH	LT	App. Total	RT	TH	LT	App. Total	RT	TH	LT	App. Total	Int. Total
Peak Hour Analysis From 16:00 to 18:00 - Peak 1 of 1																	
Peak Hour for Entire Intersection Begins at 17:00																	
17:00	31	**158**	22	**211**	**21**	**95**	**7**	**123**	15	203	35	253	23	120	36	179	766
17:15	22	132	**33**	187	18	94	5	117	14	**212**	**46**	**272**	24	184	34	242	**818**
17:30	**36**	141	31	208	18	86	6	110	11	211	32	254	25	172	40	237	809
17:45	27	128	17	172	19	91	5	115	**18**	184	38	240	**34**	**189**	**49**	**272**	799
Total Volume	116	559	103	778	76	366	23	465	58	810	151	1019	106	665	159	930	3192
% App. Total	14.9	71.9	13.2		16.3	78.7	4.9		5.7	79.5	14.8		11.4	71.5	17.1		
PHF	.806	.884	.780	.922	.905	.963	.821	.945	.806	.955	.821	.937	.779	.880	.811	.855	.976

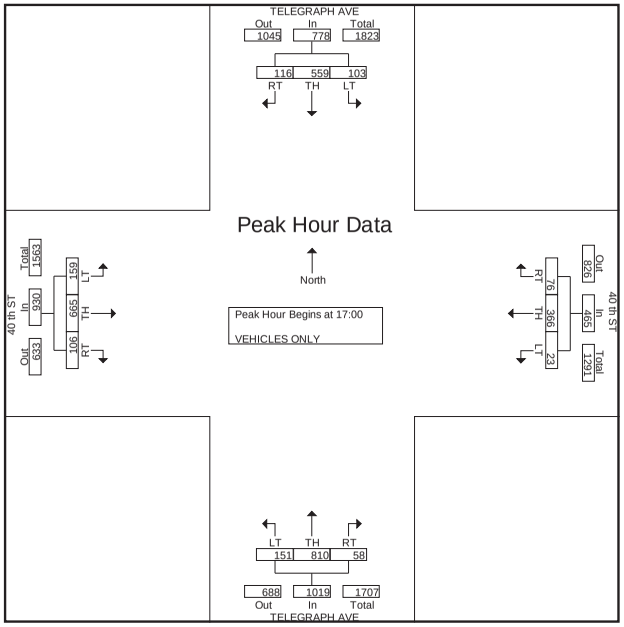

MARKS TRAFFIC DATA

PM 17
OAKLAND
FPW J
TITO [916] 715-4006

File Name : telegraph-bart-p
Site Code : 00000000
Start Date : 6/15/2006
Page No : 1

Groups Printed- VEHICLES ONLY

	TELEGRAPH AVE Southbound				BART ACCESS WAY Westbound				TELEGRAPH AVE Northbound				BART ACCESS WAY Eastbound				
Start Time	RT	TH	LT	App. Total	RT	TH	LT	App. Total	RT	TH	LT	App. Total	RT	TH	LT	App. Total	Int. Total
16:00	1	157	0	158	0	0	0	0	0	184	4	188	9	0	4	13	359
16:15	8	173	0	181	0	0	0	0	0	198	6	204	18	0	3	21	406
16:30	1	179	0	180	0	0	0	0	0	228	4	232	14	0	1	15	427
16:45	4	160	0	164	0	0	0	0	0	216	2	218	15	0	3	18	400
Total	14	669	0	683	0	0	0	0	0	826	16	842	56	0	11	67	1592
17:00	3	185	0	188	0	0	0	0	0	250	6	256	14	0	3	17	461
17:15	2	165	0	167	0	0	0	0	0	279	6	285	23	0	4	27	479
17:30	4	170	0	174	0	0	0	0	0	264	4	268	18	0	6	24	466
17:45	5	172	0	177	0	0	0	0	0	224	7	231	17	0	4	21	429
Total	14	692	0	706	0	0	0	0	0	1017	23	1040	72	0	17	89	1835
Grand Total	28	1361	0	1389	0	0	0	0	0	1843	39	1882	128	0	28	156	3427
Apprch %	2	98	0		0	0	0		0	97.9	2.1		82.1	0	17.9		
Total %	0.8	39.7	0	40.5	0	0	0	0	0	53.8	1.1	54.9	3.7	0	0.8	4.6	

	TELEGRAPH AVE Southbound				BART ACCESS WAY Westbound				TELEGRAPH AVE Northbound				BART ACCESS WAY Eastbound				
Start Time	RT	TH	LT	App. Total	RT	TH	LT	App. Total	RT	TH	LT	App. Total	RT	TH	LT	App. Total	Int. Total
Peak Hour Analysis From 16:00 to 17:45 - Peak 1 of 1																	
Peak Hour for Entire Intersection Begins at 17:00																	
17:00	3	**185**	0	**188**	0	0	0	0	0	250	6	256	14	0	3	17	461
17:15	2	165	0	167	0	0	0	0	0	**279**	6	**285**	**23**	0	4	**27**	**479**
17:30	4	170	0	174	0	0	0	0	0	264	4	268	18	0	**6**	24	466
17:45	**5**	172	0	177	0	0	0	0	0	224	**7**	231	17	0	4	21	429
Total Volume	14	692	0	706	0	0	0	0	0	1017	23	1040	72	0	17	89	1835
% App. Total	2	98	0		0	0	0		0	97.8	2.2		80.9	0	19.1		
PHF	.700	.935	.000	.939	.000	.000	.000	.000	.000	.911	.821	.912	.783	.000	.708	.824	.958

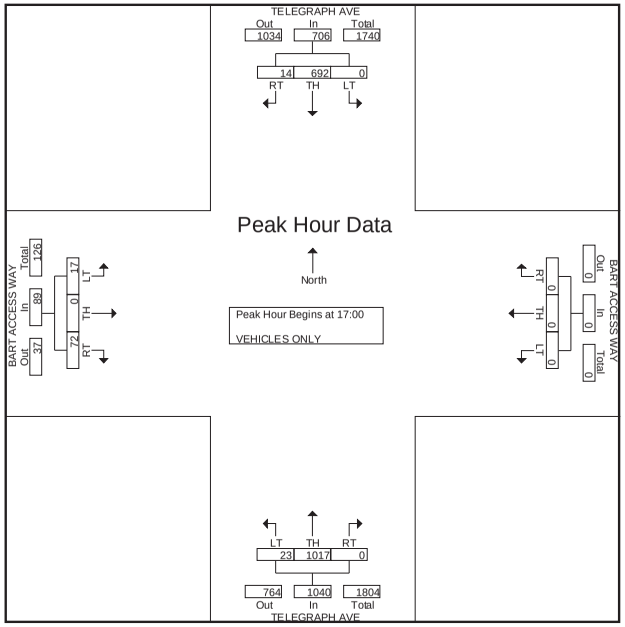

MARKS TRAFFIC DATA

PM 18
OAKLAND
FPW H
TITO [916] 715 - 4006

File Name : e-telegraph-38th-p
Site Code : 00000000
Start Date : 5/10/2006
Page No : 1

Groups Printed- ONLY

	TELEGRAPH AV Southbound				38 th ST Westbound				TELEGRAPH AV Northbound				0 Eastbound				
Start Time	RT	TH	LT	App. Total	RT	TH	LT	App. Total	RT	TH	LT	App. Total	RT	TH	LT	App. Total	Int. Total
16:00	0	159	2	161	4	0	0	4	7	170	0	177	0	0	0	0	342
16:15	0	159	1	160	5	0	1	6	4	179	0	183	0	0	0	0	349
16:30	0	148	3	151	12	0	5	17	11	201	0	212	0	0	0	0	380
16:45	0	156	6	162	9	0	2	11	7	256	0	263	0	0	0	0	436
Total	0	622	12	634	30	0	8	38	29	806	0	835	0	0	0	0	1507
17:00	0	156	3	159	10	0	1	11	4	210	0	214	0	0	0	0	384
17:15	0	143	6	149	8	0	3	11	10	229	0	239	0	0	0	0	399
17:30	0	171	2	173	10	0	0	10	7	265	0	272	0	0	0	0	455
17:45	0	160	4	164	4	0	3	7	10	211	0	221	0	0	0	0	392
Total	0	630	15	645	32	0	7	39	31	915	0	946	0	0	0	0	1630
Grand Total	0	1252	27	1279	62	0	15	77	60	1721	0	1781	0	0	0	0	3137
Apprch %	0	97.9	2.1		80.5	0	19.5		3.4	96.6	0		0	0	0		
Total %	0	39.9	0.9	40.8	2	0	0.5	2.5	1.9	54.9	0	56.8	0	0	0	0	

	TELEGRAPH AV Southbound				38 th ST Westbound				TELEGRAPH AV Northbound				0 Eastbound				
Start Time	RT	TH	LT	App. Total	RT	TH	LT	App. Total	RT	TH	LT	App. Total	RT	TH	LT	App. Total	Int. Total
Peak Hour Analysis From 16:00 to 17:45 - Peak 1 of 1																	
Peak Hour for Entire Intersection Begins at 16:45																	
16:45	0	156	**6**	162	9	0	2	**11**	7	256	0	263	0	0	0	0	436
17:00	0	156	3	159	**10**	0	1	11	4	210	0	214	0	0	0	0	384
17:15	0	143	6	149	8	0	**3**	11	**10**	229	0	239	0	0	0	0	399
17:30	0	**171**	2	**173**	10	0	0	10	7	**265**	0	**272**	0	0	0	0	**455**
Total Volume	0	626	17	643	37	0	6	43	28	960	0	988	0	0	0	0	1674
% App. Total	0	97.4	2.6		86	0	14		2.8	97.2	0		0	0	0		
PHF	.000	.915	.708	.929	.925	.000	.500	.977	.700	.906	.000	.908	.000	.000	.000	.000	.920

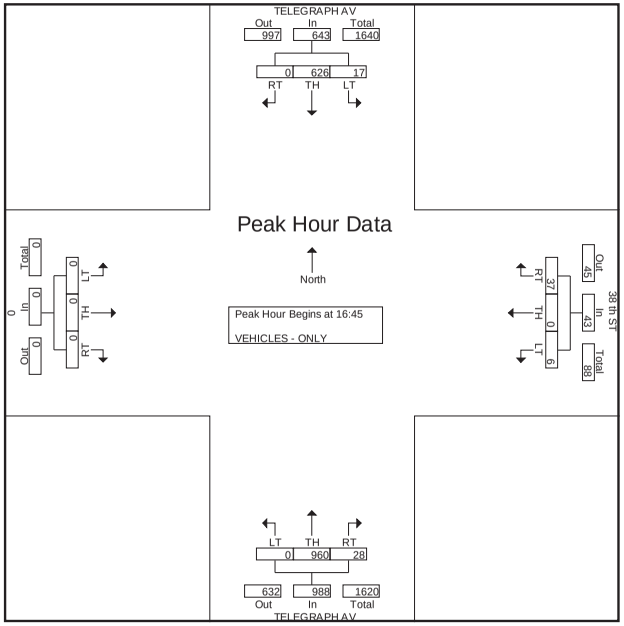

MARKS TRAFFIC DATA

PM 19
OAKLAND
FPW B
TITO [916] 715-4006

File Name : west-mcaurther-p
Site Code : 00000000
Start Date : 5/9/2006
Page No : 1

Groups Printed- VEHICLES ONLY

	WEST ST Southbound				MACARTHUR BLVD Westbound				WEST ST Northbound				MACARTHUR BLVD Eastbound				
Start Time	RT	TH	LT	App. Total	RT	TH	LT	App. Total	RT	TH	LT	App. Total	RT	TH	LT	App. Total	Int. Total
Factor	1.0	1.0	1.0		1.0	1.0	1.0		1.0	1.0	1.0		1.0	1.0	1.0		
16:00	7	35	8	50	15	84	24	123	13	44	8	65	5	93	8	106	344
16:15	4	44	8	56	8	86	18	112	12	50	7	69	5	75	7	87	324
16:30	3	38	7	48	11	95	23	129	13	42	9	64	11	80	11	102	343
16:45	2	29	10	41	10	107	13	130	9	41	7	57	16	92	9	117	345
Total	16	146	33	195	44	372	78	494	47	177	31	255	37	340	35	412	1356
17:00	7	32	13	52	16	100	14	130	11	49	8	68	8	96	8	112	362
17:15	3	29	17	49	17	87	25	129	18	61	11	90	9	106	9	124	392
17:30	3	25	11	39	14	103	9	126	10	44	14	68	11	160	14	185	418
17:45	4	26	9	39	16	102	19	137	16	49	8	73	12	152	8	172	421
Total	17	112	50	179	63	392	67	522	55	203	41	299	40	514	39	593	1593
Grand Total	33	258	83	374	107	764	145	1016	102	380	72	554	77	854	74	1005	2949
Apprch %	8.8	69	22.2		10.5	75.2	14.3		18.4	68.6	13		7.7	85	7.4		
Total %	1.1	8.7	2.8	12.7	3.6	25.9	4.9	34.5	3.5	12.9	2.4	18.8	2.6	29	2.5	34.1	

	WEST ST Southbound				MACARTHUR BLVD Westbound				WEST ST Northbound				MACARTHUR BLVD Eastbound				
Start Time	RT	TH	LT	App. Total	RT	TH	LT	App. Total	RT	TH	LT	App. Total	RT	TH	LT	App. Total	Int. Total
Peak Hour Analysis From 16:00 to 17:45 - Peak 1 of 1																	
Peak Hour for Entire Intersection Begins at 17:00																	
17:00	**7**	**32**	13	**52**	16	100	14	130	11	49	8	68	8	96	8	112	362
17:15	3	29	**17**	49	**17**	87	**25**	129	**18**	**61**	11	**90**	9	106	9	124	392
17:30	3	25	11	39	14	**103**	9	126	10	44	**14**	68	11	**160**	**14**	**185**	418
17:45	4	26	9	39	16	102	19	**137**	16	49	8	73	**12**	152	8	172	**421**
Total Volume	17	112	50	179	63	392	67	522	55	203	41	299	40	514	39	593	1593
% App. Total	9.5	62.6	27.9		12.1	75.1	12.8		18.4	67.9	13.7		6.7	86.7	6.6		
PHF	.607	.875	.735	.861	.926	.951	.670	.953	.764	.832	.732	.831	.833	.803	.696	.801	.946

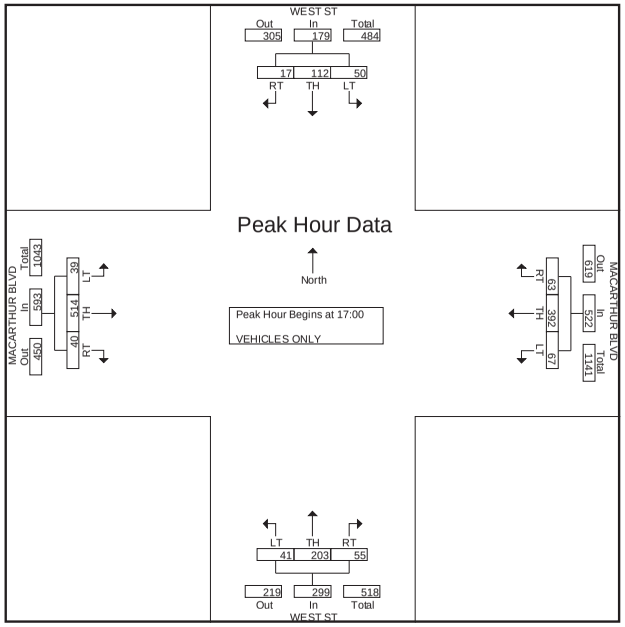

MARKS TRAFFIC DATA

PM 20
OAKLAND
FPW S
TITO [916] 715-4006

File Name : king-macarthur-p20
Site Code : 00000000
Start Date : 6/20/2006
Page No : 1

Groups Printed- VEHICLES ONLY

	M L KING WY Southbound				MacARTHUR BL Westbound				M L KING WY Northbound				MacAUTHUR BL Eastbound				
Start Time	RT	TH	LT	App. Total	RT	TH	LT	App. Total	RT	TH	LT	App. Total	RT	TH	LT	App. Total	Int. Total
16:00	9	35	11	55	39	89	9	137	15	48	4	67	7	79	8	94	353
16:15	12	30	11	53	28	92	17	137	12	49	9	70	9	80	11	100	360
16:30	5	35	11	51	31	30	16	77	15	45	9	69	9	87	15	111	308
16:45	10	27	7	44	54	99	13	166	19	49	11	79	11	76	19	106	395
Total	36	127	40	203	152	310	55	517	61	191	33	285	36	322	53	411	1416
17:00	4	34	13	51	57	127	11	195	17	53	9	79	6	65	14	85	410
17:15	7	29	11	47	38	105	13	156	11	46	15	72	11	95	22	128	403
17:30	9	35	18	62	56	95	11	162	10	40	7	57	7	93	19	119	400
17:45	5	33	30	68	54	91	13	158	10	46	8	64	10	86	19	115	405
Total	25	131	72	228	205	418	48	671	48	185	39	272	34	339	74	447	1618
Grand Total	61	258	112	431	357	728	103	1188	109	376	72	557	70	661	127	858	3034
Apprch %	14.2	59.9	26		30.1	61.3	8.7		19.6	67.5	12.9		8.2	77	14.8		
Total %	2	8.5	3.7	14.2	11.8	24	3.4	39.2	3.6	12.4	2.4	18.4	2.3	21.8	4.2	28.3	

	M L KING WY Southbound				MacARTHUR BL Westbound				M L KING WY Northbound				MacAUTHUR BL Eastbound				
Start Time	RT	TH	LT	App. Total	RT	TH	LT	App. Total	RT	TH	LT	App. Total	RT	TH	LT	App. Total	Int. Total
Peak Hour Analysis From 16:00 to 17:45 - Peak 1 of 1																	
Peak Hour for Entire Intersection Begins at 17:00																	
17:00	4	34	13	51	**57**	**127**	11	**195**	**17**	**53**	9	**79**	6	65	14	85	**410**
17:15	7	29	11	47	38	105	**13**	156	11	46	**15**	72	**11**	**95**	**22**	**128**	403
17:30	**9**	**35**	18	62	56	95	11	162	10	40	7	57	7	93	19	119	400
17:45	5	33	**30**	**68**	54	91	13	158	10	46	8	64	10	86	19	115	405
Total Volume	25	131	72	228	205	418	48	671	48	185	39	272	34	339	74	447	1618
% App. Total	11	57.5	31.6		30.6	62.3	7.2		17.6	68	14.3		7.6	75.8	16.6		
PHF	.694	.936	.600	.838	.899	.823	.923	.860	.706	.873	.650	.861	.773	.892	.841	.873	.987

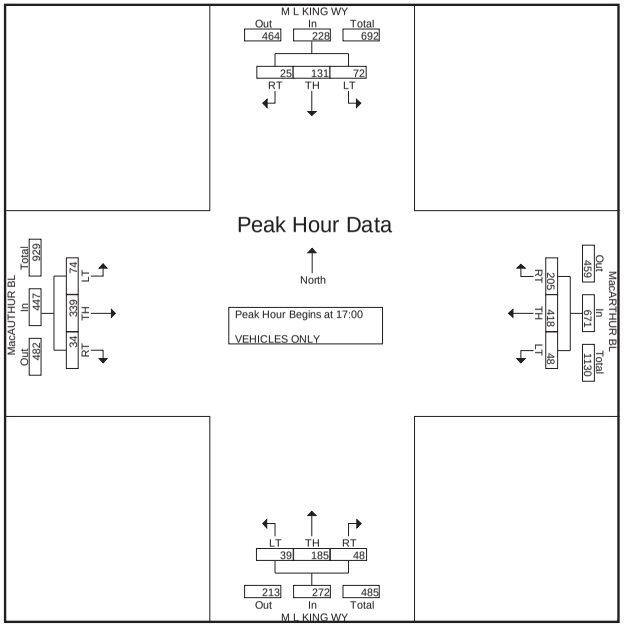

MARKS TRAFFIC DATA

PM 21
OAKLAND
FPW H
TITO [916] 715-4006

File Name : bart-dw-macathur-p20
Site Code : 00000000
Start Date : 6/20/2006
Page No : 1

Groups Printed- VEHICLES ONLY

	0 Southbound				MacATHUR BL Westbound				0 Northbound				MacATHUR BL Eastbound				
Start Time	RT	TH	LT	App. Total	RT	TH	LT	App. Total	RT	TH	LT	App. Total	RT	TH	LT	App. Total	Int. Total
16:00	28	0	0	28	2	116	0	118	0	0	0	0	0	110	0	110	256
16:15	25	0	0	25	3	125	0	128	0	0	0	0	0	107	0	107	260
16:30	42	0	0	42	8	107	0	115	0	0	0	0	0	129	0	129	286
16:45	38	0	0	38	6	143	0	149	0	0	0	0	0	106	0	106	293
Total	133	0	0	133	19	491	0	510	0	0	0	0	0	452	0	452	1095
17:00	46	0	0	46	1	158	0	159	0	0	0	0	0	93	0	93	298
17:15	49	0	0	49	9	108	0	117	0	0	0	0	0	124	0	124	290
17:30	58	0	0	58	4	116	0	120	0	0	0	0	0	129	0	129	307
17:45	75	0	0	75	6	113	0	119	0	0	0	0	0	120	0	120	314
Total	228	0	0	228	20	495	0	515	0	0	0	0	0	466	0	466	1209
Grand Total	361	0	0	361	39	986	0	1025	0	0	0	0	0	918	0	918	2304
Apprch %	100	0	0		3.8	96.2	0		0	0	0		0	100	0		
Total %	15.7	0	0	15.7	1.7	42.8	0	44.5	0	0	0	0	0	39.8	0	39.8	

	0 Southbound				MacATHUR BL Westbound				0 Northbound				MacATHUR BL Eastbound				
Start Time	RT	TH	LT	App. Total	RT	TH	LT	App. Total	RT	TH	LT	App. Total	RT	TH	LT	App. Total	Int. Total
Peak Hour Analysis From 16:00 to 17:45 - Peak 1 of 1																	
Peak Hour for Entire Intersection Begins at 17:00																	
17:00	46	0	0	46	1	**158**	0	**159**	0	0	0	0	0	93	0	93	298
17:15	49	0	0	49	**9**	108	0	117	0	0	0	0	0	124	0	124	290
17:30	58	0	0	58	4	116	0	120	0	0	0	0	0	**129**	0	**129**	307
17:45	**75**	0	0	**75**	6	113	0	119	0	0	0	0	0	120	0	120	**314**
Total Volume	228	0	0	228	20	495	0	515	0	0	0	0	0	466	0	466	1209
% App. Total	100	0	0		3.9	96.1	0		0	0	0		0	100	0		
PHF	.760	.000	.000	.760	.556	.783	.000	.810	.000	.000	.000	.000	.000	.903	.000	.903	.963

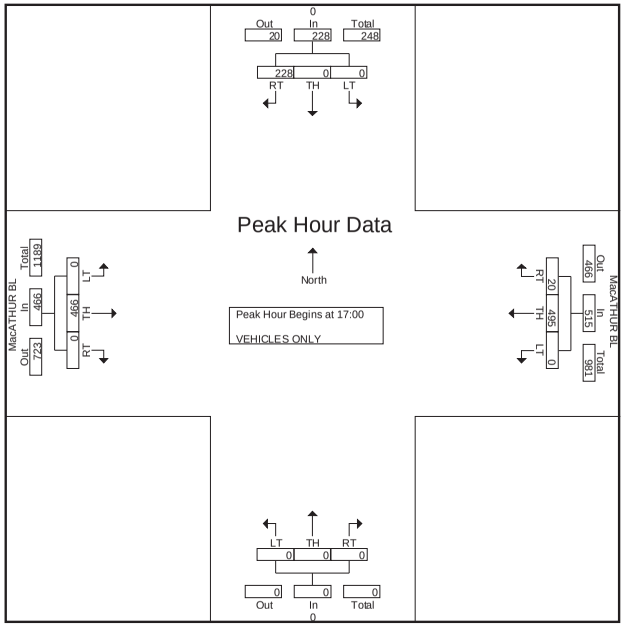

MARKS TRAFFIC DATA

PM 22
OAKLAND
FPW J
TITO [916] 715-4006

File Name : telegraph-macathur-p20
Site Code : 00000000
Start Date : 6/20/2006
Page No : 1

Groups Printed- VEHICLES ONLY

	TELEGRAPH AV Southbound				MacARTHUR BL Westbound				TELEGRAPH AV Northbound				MacARTHUR BL Eastbound				
Start Time	RT	TH	LT	App. Total	RT	TH	LT	App. Total	RT	TH	LT	App. Total	RT	TH	LT	App. Total	Int. Total
16:00	14	111	37	162	50	75	15	140	18	128	20	166	15	71	16	102	570
16:15	16	117	37	170	33	85	20	138	19	152	20	191	12	64	19	95	594
16:30	11	97	30	138	42	65	10	117	26	136	26	188	12	85	34	131	574
16:45	16	114	38	168	43	100	26	169	17	113	25	155	9	73	18	100	592
Total	57	439	142	638	168	325	71	564	80	529	91	700	48	293	87	428	2330
17:00	15	106	22	143	45	101	17	163	20	147	18	185	14	46	30	90	581
17:15	7	149	24	180	33	77	10	120	13	197	24	234	16	81	25	122	656
17:30	8	105	42	155	42	73	8	123	16	135	23	174	11	76	36	123	575
17:45	12	120	40	172	40	76	7	123	13	114	28	155	10	74	24	108	558
Total	42	480	128	650	160	327	42	529	62	593	93	748	51	277	115	443	2370
Grand Total	99	919	270	1288	328	652	113	1093	142	1122	184	1448	99	570	202	871	4700
Apprch %	7.7	71.4	21		30	59.7	10.3		9.8	77.5	12.7		11.4	65.4	23.2		
Total %	2.1	19.6	5.7	27.4	7	13.9	2.4	23.3	3	23.9	3.9	30.8	2.1	12.1	4.3	18.5	

	TELEGRAPH AV Southbound				MacARTHUR BL Westbound				TELEGRAPH AV Northbound				MacARTHUR BL Eastbound				
Start Time	RT	TH	LT	App. Total	RT	TH	LT	App. Total	RT	TH	LT	App. Total	RT	TH	LT	App. Total	Int. Total
Peak Hour Analysis From 16:00 to 17:45 - Peak 1 of 1																	
Peak Hour for Entire Intersection Begins at 16:45																	
16:45	**16**	114	38	168	43	100	**26**	**169**	17	113	**25**	155	9	73	18	100	592
17:00	15	106	22	143	**45**	**101**	17	163	**20**	147	18	185	14	46	30	90	581
17:15	7	**149**	24	**180**	33	77	10	120	13	**197**	24	**234**	**16**	**81**	25	122	**656**
17:30	8	105	**42**	155	42	73	8	123	16	135	23	174	11	76	**36**	**123**	575
Total Volume	46	474	126	646	163	351	61	575	66	592	90	748	50	276	109	435	2404
% App. Total	7.1	73.4	19.5		28.3	61	10.6		8.8	79.1	12		11.5	63.4	25.1		
PHF	.719	.795	.750	.897	.906	.869	.587	.851	.825	.751	.900	.799	.781	.852	.757	.884	.916

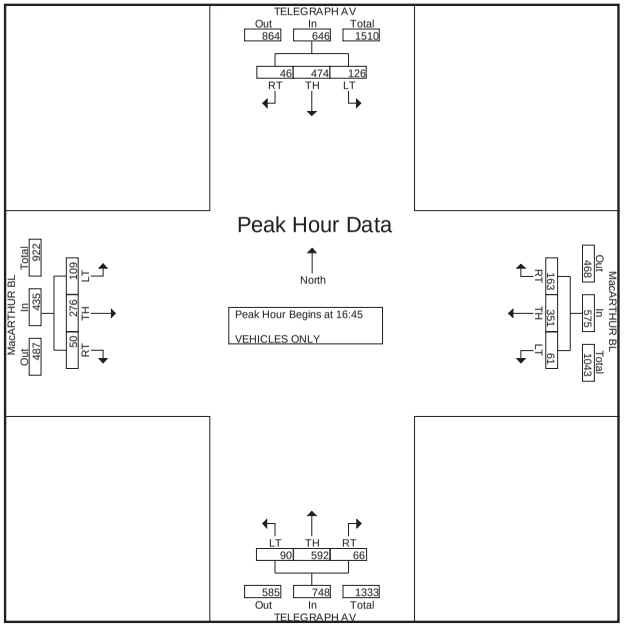

MARKS TRAFFIC DATA

PM 23
OAKLAND
FPW PS
TITO [916] 715-4006

File Name : broadway-mcaurther-p
Site Code : 00000000
Start Date : 5/9/2006
Page No : 1

Groups Printed- VEHICLES ONLY

	BROADWAY Southbound				MacARTHUR BL Westbound				BROADWAY Northbound				MacARTHUR BL Eastbound				
Start Time	RT	TH	LT	App. Total	RT	TH	LT	App. Total	RT	TH	LT	App. Total	RT	TH	LT	App. Total	Int. Total
Factor	1.0	1.0	1.0		1.0	1.0	1.0		1.0	1.0	1.0		1.0	1.0	1.0		
16:00	16	93	66	175	63	83	34	180	32	122	43	197	15	115	24	154	706
16:15	16	97	71	184	76	110	25	211	17	139	33	189	16	121	30	167	751
16:30	25	72	56	153	60	88	29	177	27	113	44	184	15	121	28	164	678
16:45	16	93	80	189	65	103	29	197	21	130	32	183	15	122	21	158	727
Total	73	355	273	701	264	384	117	765	97	504	152	753	61	479	103	643	2862
17:00	14	99	79	192	53	97	19	169	36	156	44	236	16	116	42	174	771
17:15	21	96	74	191	54	112	20	186	27	211	43	281	9	154	48	211	869
17:30	13	99	79	191	48	78	23	149	22	136	39	197	19	154	45	218	755
17:45	15	82	75	172	55	82	19	156	21	149	41	211	22	160	52	234	773
Total	63	376	307	746	210	369	81	660	106	652	167	925	66	584	187	837	3168
Grand Total	136	731	580	1447	474	753	198	1425	203	1156	319	1678	127	1063	290	1480	6030
Apprch %	9.4	50.5	40.1		33.3	52.8	13.9		12.1	68.9	19		8.6	71.8	19.6		
Total %	2.3	12.1	9.6	24	7.9	12.5	3.3	23.6	3.4	19.2	5.3	27.8	2.1	17.6	4.8	24.5	

	BROADWAY Southbound				MacARTHUR BL Westbound				BROADWAY Northbound				MacARTHUR BL Eastbound				
Start Time	RT	TH	LT	App. Total	RT	TH	LT	App. Total	RT	TH	LT	App. Total	RT	TH	LT	App. Total	Int. Total
Peak Hour Analysis From 16:00 to 17:45 - Peak 1 of 1																	
Peak Hour for Entire Intersection Begins at 17:00																	
17:00	14	**99**	**79**	**192**	53	97	19	169	**36**	156	**44**	236	16	116	42	174	771
17:15	**21**	96	74	191	54	**112**	20	**186**	27	**211**	43	**281**	9	154	48	211	**869**
17:30	13	99	79	191	48	78	**23**	149	22	136	39	197	19	154	45	218	755
17:45	15	82	75	172	**55**	82	19	156	21	149	41	211	**22**	**160**	**52**	**234**	773
Total Volume	63	376	307	746	210	369	81	660	106	652	167	925	66	584	187	837	3168
% App. Total	8.4	50.4	41.2		31.8	55.9	12.3		11.5	70.5	18.1		7.9	69.8	22.3		
PHF	.750	.949	.972	.971	.955	.824	.880	.887	.736	.773	.949	.823	.750	.913	.899	.894	.911

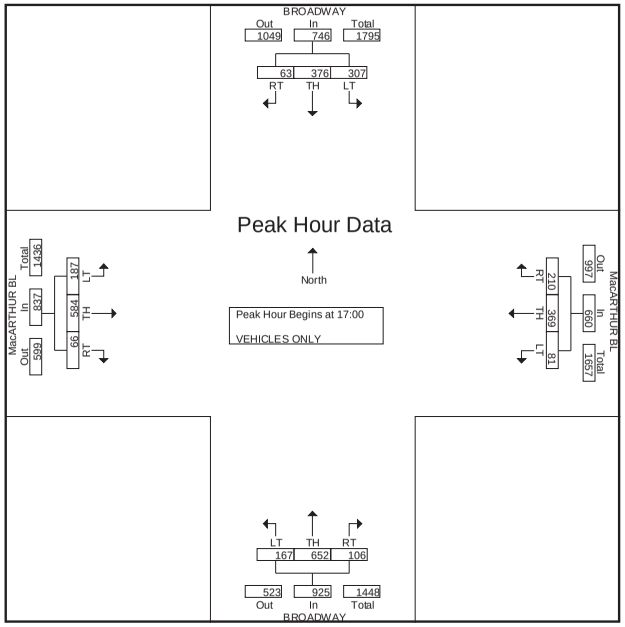

MARKS TRAFFIC DATA

PM 24
OAKLAND
FPW L
TITO [916] 715-4006

File Name : telegraph-34th-p
Site Code : 00000000
Start Date : 5/9/2006
Page No : 1

Groups Printed- VEHICLES ONLY

	TELEGRAPH AVE Southbound				34 th ST Westbound				TELEGRAPH AVE Northbound				34 th ST Eastbound				
Start Time	RT	TH	LT	App. Total	RT	TH	LT	App. Total	RT	TH	LT	App. Total	RT	TH	LT	App. Total	Int. Total
Factor	1.0	1.0	1.0		1.0	1.0	1.0		1.0	1.0	1.0		1.0	1.0	1.0		
16:00	11	124	7	142	7	10	14	31	5	131	6	142	11	11	19	41	356
16:15	12	120	8	140	8	12	20	40	6	126	8	140	8	10	24	42	362
16:30	13	189	11	213	7	13	3	23	4	141	6	151	22	13	20	55	442
16:45	13	152	6	171	9	6	6	21	11	120	10	141	8	9	15	32	365
Total	49	585	32	666	31	41	43	115	26	518	30	574	49	43	78	170	1525
17:00	17	203	9	229	12	15	11	38	11	127	10	148	20	6	25	51	466
17:15	12	202	10	224	12	13	11	36	9	122	13	144	14	7	15	36	440
17:30	15	177	4	196	6	17	8	31	13	123	10	146	17	8	34	59	432
17:45	12	157	7	176	5	14	12	31	2	141	7	150	14	12	22	48	405
Total	56	739	30	825	35	59	42	136	35	513	40	588	65	33	96	194	1743
Grand Total	105	1324	62	1491	66	100	85	251	61	1031	70	1162	114	76	174	364	3268
Apprch %	7	88.8	4.2		26.3	39.8	33.9		5.2	88.7	6		31.3	20.9	47.8		
Total %	3.2	40.5	1.9	45.6	2	3.1	2.6	7.7	1.9	31.5	2.1	35.6	3.5	2.3	5.3	11.1	

	TELEGRAPH AVE Southbound				34 th ST Westbound				TELEGRAPH AVE Northbound				34 th ST Eastbound				
Start Time	RT	TH	LT	App. Total	RT	TH	LT	App. Total	RT	TH	LT	App. Total	RT	TH	LT	App. Total	Int. Total
Peak Hour Analysis From 16:00 to 17:45 - Peak 1 of 1																	
Peak Hour for Entire Intersection Begins at 17:00																	
17:00	**17**	**203**	9	**229**	**12**	15	11	**38**	11	127	10	148	**20**	6	25	51	**466**
17:15	12	202	**10**	224	12	13	11	36	9	122	**13**	144	14	7	15	36	440
17:30	15	177	4	196	6	**17**	8	31	**13**	123	10	146	17	8	**34**	**59**	432
17:45	12	157	7	176	5	14	**12**	31	2	**141**	7	**150**	14	**12**	22	48	405
Total Volume	56	739	30	825	35	59	42	136	35	513	40	588	65	33	96	194	1743
% App. Total	6.8	89.6	3.6		25.7	43.4	30.9		6	87.2	6.8		33.5	17	49.5		
PHF	.824	.910	.750	.901	.729	.868	.875	.895	.673	.910	.769	.980	.813	.688	.706	.822	.935

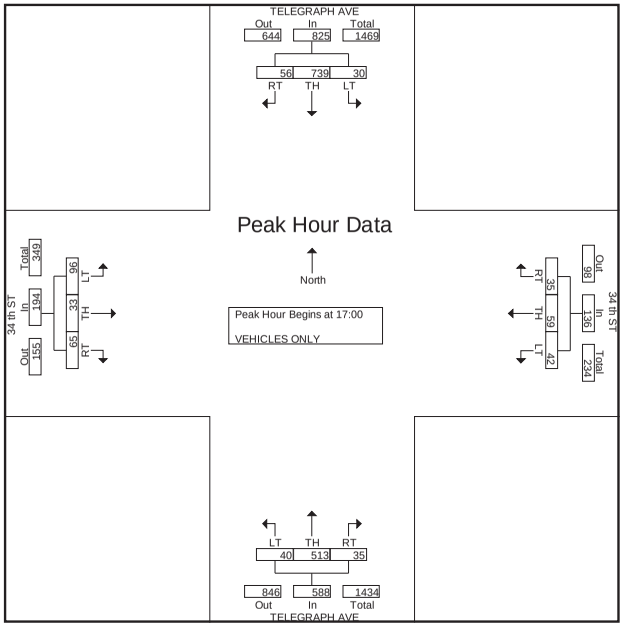

MARKS TRAFFIC DATA

PM 26
OAKLAND
FPW A
TITO [916] 715-4006

File Name : telegraphy-27th-p
Site Code : 00000000
Start Date : 5/9/2006
Page No : 1

Groups Printed- VEHICLES ONLY

	TELEGRAPH AVE Southbound				27 th ST Westbound				TELEGRAPH AVE Northbound				27 th ST Eastbound				
Start Time	RT	TH	LT	App. Total	RT	TH	LT	App. Total	RT	TH	LT	App. Total	RT	TH	LT	App. Total	Int. Total
Factor	1.0	1.0	1.0		1.0	1.0	1.0		1.0	1.0	1.0		1.0	1.0	1.0		
16:00	81	101	19	201	20	114	8	142	9	108	31	148	11	54	38	103	594
16:15	100	103	27	230	32	87	5	124	9	87	34	130	22	59	39	120	604
16:30	81	131	22	234	30	88	12	130	8	113	30	151	17	62	30	109	624
16:45	89	95	35	219	22	91	11	124	7	91	21	119	25	66	32	123	585
Total	351	430	103	884	104	380	36	520	33	399	116	548	75	241	139	455	2407
17:00	83	135	18	236	20	104	16	140	9	122	21	152	15	82	31	128	656
17:15	76	94	21	191	23	119	16	158	11	122	28	161	25	70	27	122	632
17:30	74	110	24	208	26	85	8	119	5	126	37	168	26	80	51	157	652
17:45	61	127	32	220	29	75	16	120	4	114	27	145	34	84	18	136	621
Total	294	466	95	855	98	383	56	537	29	484	113	626	100	316	127	543	2561
Grand Total	645	896	198	1739	202	763	92	1057	62	883	229	1174	175	557	266	998	4968
Apprch %	37.1	51.5	11.4		19.1	72.2	8.7		5.3	75.2	19.5		17.5	55.8	26.7		
Total %	13	18	4	35	4.1	15.4	1.9	21.3	1.2	17.8	4.6	23.6	3.5	11.2	5.4	20.1	

	TELEGRAPH AVE Southbound				27 th ST Westbound				TELEGRAPH AVE Northbound				27 th ST Eastbound				
Start Time	RT	TH	LT	App. Total	RT	TH	LT	App. Total	RT	TH	LT	App. Total	RT	TH	LT	App. Total	Int. Total
Peak Hour Analysis From 16:00 to 17:45 - Peak 1 of 1																	
Peak Hour for Entire Intersection Begins at 17:00																	
17:00	**83**	**135**	18	**236**	20	104	**16**	140	9	122	21	152	15	82	31	128	**656**
17:15	76	94	21	191	23	**119**	16	**158**	**11**	122	28	161	25	70	27	122	632
17:30	74	110	24	208	26	85	8	119	5	**126**	**37**	**168**	26	80	**51**	**157**	652
17:45	61	127	**32**	220	**29**	75	16	120	4	114	27	145	**34**	**84**	18	136	621
Total Volume	294	466	95	855	98	383	56	537	29	484	113	626	100	316	127	543	2561
% App. Total	34.4	54.5	11.1		18.2	71.3	10.4		4.6	77.3	18.1		18.4	58.2	23.4		
PHF	.886	.863	.742	.906	.845	.805	.875	.850	.659	.960	.764	.932	.735	.940	.623	.865	.976

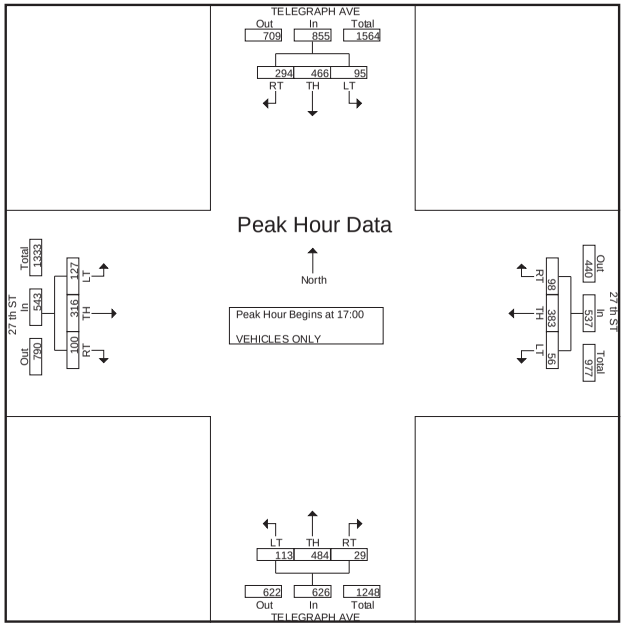

PM 11
OAKLAND
FPW T
TITO [916] 715-4006

MARKS TRAFFIC DATA

#15 P/B
PM

File Name : Mmlk-king-40th-p
Site Code : 00000000
Start Date : 5/10/2006
Page No : 1

Groups Printed- PEDS BIKES

	M L KING WY Southbound				40 th ST Westbound					M L KING WY Northbound					40 th ST Eastbound							
Start Time	RT	TH	LT	PED	App. Total	RT	TH	LT	PED	App. Total	RT	TH	LT	PED	App. Total	RT	TH	LT	PED	App. Total	Exclu. Total	Inclu. Total	Int. Total
16:00	1	1	0	7	2	0	5	0	8	5	0	0	0	8	0	0	5	1	0	6	21	13	34
16:15	0	1	2	2	3	1	1	0	13	2	0	0	0	18	0	0	1	1	0	2	33	7	40
16:30	0	0	1	7	1	0	0	0	8	0	0	0	0	14	0	0	7	0	0	7	30	8	38
16:45	0	1	0	6	1	1	0	0	3	1	0	0	0	17	0	0	3	8	0	11	26	13	39
Total	1	3	3	22	7	2	6	0	31	8	0	0	0	57	0	0	16	10	0	26	110	41	151
17:00	0	0	1	0	1	1	0	0	3	1	0	1	0	6	1	0	2	0	0	2	9	5	14
17:15	0	1	0	0	1	1	1	0	4	2	0	2	0	7	2	0	7	4	0	11	11	16	27
17:30	0	1	0	3	1	0	3	0	8	3	0	0	0	19	0	1	1	3	0	5	30	9	39
17:45	1	7	0	5	8	0	0	0	10	0	0	0	0	7	0	3	1	11	0	15	22	23	45
Total	1	9	1	8	11	2	4	0	25	6	0	3	0	39	3	4	11	18	0	33	72	53	125
Grand Total	2	12	4	30	18	4	10	0	56	14	0	3	0	96	3	4	27	28	0	59	182	94	276
Apprch %	11.1	66.7	22.2			28.6	71.4	0.0			0.0	100.0	0.0			6.8	45.8	47.5					
Total %	2.1	12.8	4.3		19.1	4.3	10.6	0.0		14.9	0.0	3.2	0.0		3.2	4.3	28.7	29.8		62.8	85.9	34.1	

	M L KING WY Southbound				40 th ST Westbound				M L KING WY Northbound				40 th ST Eastbound				
Start Time	RT	TH	LT	App. Total	RT	TH	LT	App. Total	RT	TH	LT	App. Total	RT	TH	LT	App. Total	Int. Total
Peak Hour From 16:00 to 17:45 - Peak 1 of 1																	
Intersection	17:00																
Volume	1	9	1	11	2	4	0	6	0	3	0	3	4	11	18	33	53
Percent	9.1	81.8	9.1		33.3	66.7	0.0		0.0	100.0	0.0		12.1	33.3	54.5		
17:45 Volume	1	7	0	8	0	0	0	0	0	0	0	0	3	1	11	15	23
Peak Factor																	0.576
High Int.	17:45				17:30				17:15				17:45				
Volume	1	7	0	8	0	3	0	3	0	2	0	2	3	1	11	15	
Peak Factor				0.344				0.500				0.375				0.550	

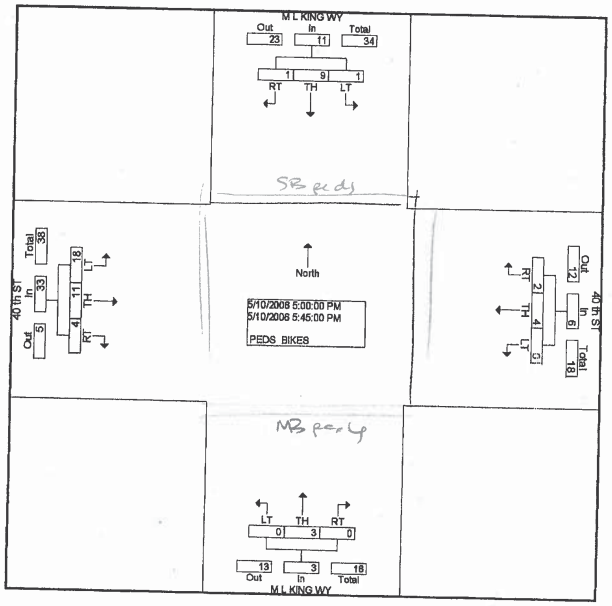

FROM :MJD FAX NO. :916 364 7987 Jun. 14 2006 07:57AM P5

PM 12
OAKLAND
FPW I
TITO [916] 715-4006

MARKS TRAFFIC DATA

#16 P/B PM

File Name : dw12-40th-p
Site Code : 00000000
Start Date : 5/10/2006
Page No : 1

Groups Printed- PEDS BIKES

	0 Southbound					40TH ST Westbound					0 Northbound					40TH ST Eastbound							
Start Time	RT	TH	LT	PED	App. Total	RT	TH	LT	PED	App. Total	RT	TH	LT	PED	App. Total	RT	TH	LT	PED	App. Total	Exclu. Total	Inclu. Total	Int. Total
Factor	1.0	1.0	1.0	1.0		1.0	1.0	1.0	1.0		1.0	1.0	1.0	1.0		1.0	1.0	1.0	1.0				
16:00	0	0	0	0	0	0	6	0	0	6	0	0	0	31	0	0	5	1	16	6	47	12	59
16:15	0	0	0	0	0	0	2	0	0	2	0	0	0	30	0	0	7	1	13	8	43	10	53
16:30	0	0	0	0	0	0	4	0	0	4	0	0	0	54	0	0	8	3	42	11	96	15	111
16:45	0	0	0	0	0	0	3	0	0	3	0	0	0	44	0	0	3	4	28	7	72	10	82
Total	0	0	0	0	0	0	15	0	0	15	0	0	0	159	0	0	23	9	99	32	258	47	305
17:00	0	0	0	0	0	0	6	0	0	6	0	0	0	36	0	0	6	0	28	6	64	12	76
17:15	0	0	0	0	0	0	3	0	0	3	0	0	0	47	0	0	7	1	25	8	72	11	83
17:30	0	0	0	0	0	0	4	0	0	4	0	0	0	71	0	0	3	1	37	4	108	8	116
17:45	0	0	0	0	0	2	2	4	0	8	0	0	0	59	0	0	9	1	45	10	104	18	122
Total	0	0	0	0	0	2	15	4	0	21	0	0	0	213	0	0	25	3	135	28	348	49	397
Grand Total	0	0	0	0	0	2	30	4	0	36	0	0	0	372	0	0	48	12	234	60	606	96	702
Approch %	0.0	0.0	0.0			5.6	83.3	11.1			0.0	0.0	0.0			0.0	80.0	20.0					
Total %	0.0	0.0	0.0		0.0	2.1	31.3	4.2		37.5	0.0	0.0	0.0		0.0	0.0	50.0	12.5		62.5	86.3	13.7	

	0 Southbound				40TH ST Westbound				0 Northbound				40TH ST Eastbound				
Start Time	RT	TH	LT	App. Total	RT	TH	LT	App. Total	RT	TH	LT	App. Total	RT	TH	LT	App. Total	Int. Total
Peak Hour From 16:00 to 17:45 - Peak 1 of 1																	
Intersection	17:00																
Volume	0	0	0	0	2	15	4	21	0	0	0	0	0	25	3	28	49
Percent	0.0	0.0	0.0		9.5	71.4	19.0		0.0	0.0	0.0		0.0	89.3	10.7		
17:45 Volume	0	0	0	0	2	2	4	8	0	0	0	0	0	9	1	10	18
Peak Factor																	0.681
High Int.	3:45:00 PM				17:45				3:45:00 PM				17:45				
Volume	0	0	0	0	2	2	4	8	0	0	0	0	0	9	1	10	
Peak Factor								0.656								0.700	

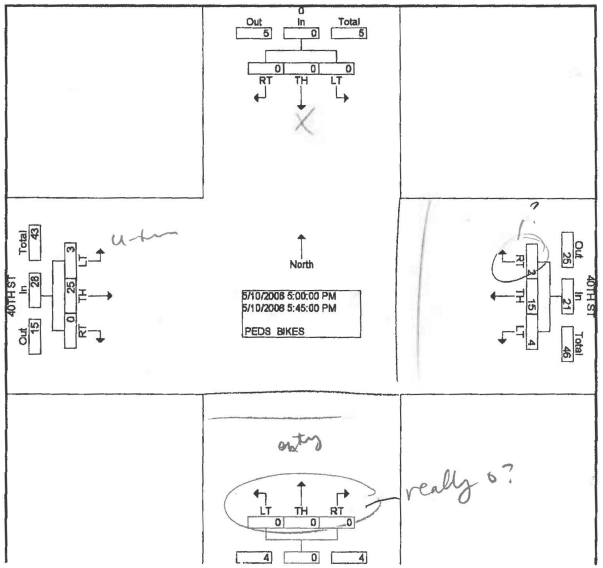

FROM :MJD FAX NO. :916 364 7987 Jun. 14 2006 07:58AM P7

PM 13
OAKLAND
FPW C
TITO [916] 715-4006

MARKS TRAFFIC DATA

#17 P/B PM

File Name : dw13-40th-p
Site Code : 00000000
Start Date : 5/10/2006
Page No : 1

Groups Printed- PEDS BIKES

	0 Southbound					40 th ST Westbound					0 Northbound					40 th ST Eastbound							
Start Time	RT	TH	LT	PED	App. Total	RT	TH	LT	PED	App. Total	RT	TH	LT	PED	App. Total	RT	TH	LT	PED	App. Total	Exclu. Total	Inclu. Total	Int. Total
Factor	1.0	1.0	1.0	1.0		1.0	1.0	1.0	1.0		1.0	1.0	1.0	1.0		1.0	1.0	1.0	1.0				
16:00	0	0	0	0	0	0	7	0	5	7	0	0	0	0	0	0	4	0	12	4	17	11	28
16:15	0	0	0	0	0	0	1	0	13	1	0	0	0	0	0	0	8	0	0	8	13	9	22
16:30	0	0	0	0	0	0	4	0	4	4	0	0	0	0	0	0	8	0	21	8	25	12	37
16:45	0	0	0	0	0	0	3	0	12	3	0	0	0	0	0	0	12	0	24	12	36	15	51
Total	0	0	0	0	0	0	15	0	34	15	0	0	0	0	0	0	32	0	57	32	91	47	138
17:00	0	0	0	0	0	0	5	0	11	5	0	0	0	0	0	0	7	0	20	7	31	12	43
17:15	0	0	0	0	0	0	2	0	10	2	0	0	0	0	0	0	6	0	13	6	23	8	31
17:30	0	0	0	0	0	0	5	0	17	5	0	0	0	0	0	0	3	0	24	3	41	8	49
17:45	0	0	0	0	0	0	2	0	14	2	0	0	0	0	0	0	10	0	52	10	66	12	78
Total	0	0	0	0	0	0	14	0	52	14	0	0	0	0	0	0	26	0	109	26	161	40	201
Grand Total	0	0	0	0	0	0	29	0	86	29	0	0	0	0	0	0	58	0	166	58	252	87	339
Approch %	0.0	0.0	0.0			0.0	100.0	0.0			0.0	0.0	0.0			0.0	100.0	0.0					
Total %	0.0	0.0	0.0		0.0	0.0	33.3	0.0		33.3	0.0	0.0	0.0		0.0	0.0	66.7	0.0		66.7	74.3	25.7	

	0 Southbound				40 th ST Westbound				0 Northbound				40 th ST Eastbound				
Start Time	RT	TH	LT	App. Total	RT	TH	LT	App. Total	RT	TH	LT	App. Total	RT	TH	LT	App. Total	Int. Total
Peak Hour From 16:00 to 17:45 - Peak 1 of 1																	
Intersection	16:15																
Volume	0	0	0	0	0	13	0	13	0	0	0	0	0	35	0	35	48
Percent	0.0	0.0	0.0		0.0	100.0	0.0		0.0	0.0	0.0		0.0	100.0	0.0		
16:45 Volume	0	0	0	0	0	3	0	3	0	0	0	0	0	12	0	12	15
Peak Factor																	0.800
High Int.	3:45:00 PM				17:00				3:45:00 PM				16:45				
Volume	0	0	0	0	0	5	0	5	0	0	0	0	0	12	0	12	
Peak Factor								0.650								0.729	

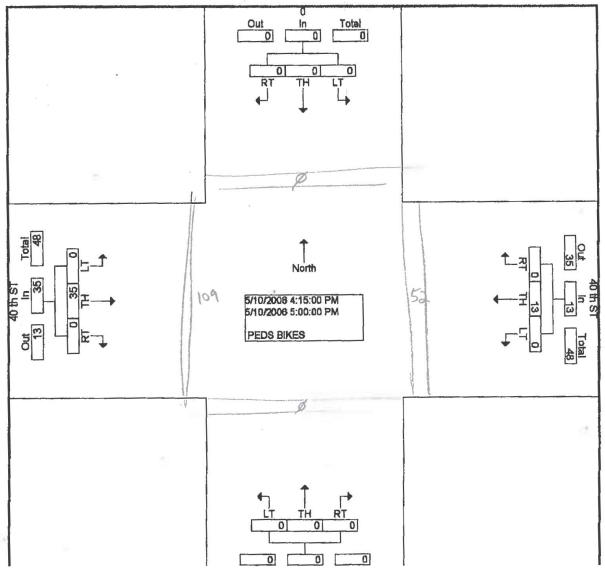

PM
Bike / Ped

MARKS TRAFFIC DATA

#19
P/B

CITY OF OAKLAND
FP
AM 15

File Name : telegraph-40-p
Site Code : 15
Start Date : 5/10/2006
Page No : 1

Groups Printed- Bikes and Peds

	TELEGRAPH AV. Southbound					40th ST. Westbound					TELEGRAPH AV. Northbound					40th ST. Eastbound					
Start Time	RT	TH	LT	Ped	App. Total	RT	TH	LT	Ped	App. Total	RT	TH	LT	Ped	App. Total	RT	TH	LT	Ped	App. Total	Int. Total
16:00	1	4	1	15	21	0	3	0	9	12	0	3	2	19	24	1	3	0	24	28	85
16:15	0	8	0	15	23	1	2	0	3	6	0	8	0	18	26	4	1	1	29	35	90
16:30	0	6	0	11	17	0	3	0	13	16	0	5	0	32	37	1	4	0	23	28	98
16:45	2	3	1	17	23	0	0	0	8	8	0	3	0	19	22	2	9	1	44	56	109
Total	3	21	2	58	84	1	8	0	33	42	0	19	2	88	109	8	17	2	120	147	382
17:00	1	6	0	9	16	0	3	0	5	8	0	4	0	12	16	1	2	3	25	31	71
17:15	0	2	1	19	22	0	1	0	7	8	0	9	0	12	21	0	2	3	25	30	81
17:30	1	3	0	38	42	0	0	0	18	18	0	6	1	27	34	0	1	0	41	42	136
17:45	0	2	1	28	31	0	0	0	10	10	0	10	0	35	45	0	3	5	20	28	114
Total	2	13	2	94	111	0	4	0	40	44	0	29	1	86	116	1	8	11	111	131	402
Grand Total	5	34	4	152	195	1	12	0	73	86	0	48	3	174	225	9	25	13	231	278	784
Apprch %	2.6	17.4	2.1	77.9		1.2	14	0	84.9		0	21.3	1.3	77.3		3.2	9	4.7	83.1		
Total %	0.6	4.3	0.5	19.4	24.9	0.1	1.5	0	9.3	11	0	6.1	0.4	22.2	28.7	1.1	3.2	1.7	29.5	35.5	

	TELEGRAPH AV. Southbound					40th ST. Westbound					TELEGRAPH AV. Northbound					40th ST. Eastbound					
Start Time	RT	TH	LT	Ped	App. Total	RT	TH	LT	Ped	App. Total	RT	TH	LT	Ped	App. Total	RT	TH	LT	Ped	App. Total	Int. Total
Peak Hour Analysis From 16:00 to 17:45 - Peak 1 of 1																					
Peak Hour for Entire Intersection Begins at 17:00																					
17:00	1	6	0	9	16	0	3	0	5	8	0	4	0	12	16	1	2	3	25	31	71
17:15	0	2	1	19	22	0	1	0	7	8	0	9	0	12	21	0	2	3	25	30	81
17:30	1	3	0	38	42	0	0	0	18	18	0	6	1	27	34	0	1	0	41	42	136
17:45	0	2	1	28	31	0	0	0	10	10	0	10	0	35	45	0	3	5	20	28	114
Total Volume	2	13	2	94	111	0	4	0	40	44	0	29	1	86	116	1	8	11	111	131	402
% App. Total	1.8	11.7	1.8	84.7		0	9.1	0	90.9		0	25	0.9	74.1		0.8	6.1	8.4	84.7		
PHF	.500	.542	.500	.618	.661	.000	.333	.000	.556	.611	.000	.725	.250	.614	.644	.250	.667	.550	.677	.780	.739

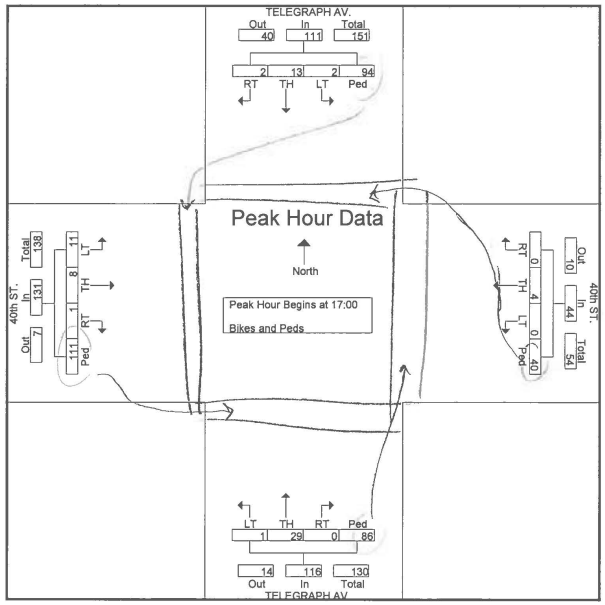

PM 20
OAKLAND
FPW E
TITO [916] 715-4006

MARKS TRAFFIC DATA

#24
P/B
PM

File Name : ml-king-mcaurther-p
Site Code : 00000000
Start Date : 5/10/2006
Page No : 1

Groups Printed- PEDS BIKES

	M L KING WY Southbound					MACARTHUR BL Westbound					M L KING WY Northbound					MACARTHUR BL Eastbound							
Start Time	RT	TH	LT	PED	App. Total	RT	TH	LT	PED	App. Total	RT	TH	LT	PED	App. Total	RT	TH	LT	PED	App. Total	Exclu. Total	Inclu. Total	Int. Total
Factor	1.0	1.0	1.0	1.0		1.0	1.0	1.0	1.0		1.0	1.0	1.0	1.0		1.0	1.0	1.0	1.0				
16:00	0	1	0	1	1	0	4	0	4	4	0	1	2	0	3	0	3	0	2	3	7	11	18
16:15	1	0	0	3	1	0	0	0	3	0	0	0	0	3	0	0	0	0	3	0	12	1	13
16:30	0	0	0	6	0	1	2	1	1	4	0	0	0	5	0	0	2	0	8	2	20	8	28
16:45	0	0	0	6	0	1	0	0	4	1	0	0	0	6	0	0	1	0	5	1	21	2	23
Total	1	1	0	16	2	2	6	1	12	9	0	1	2	14	3	0	6	0	18	6	60	20	80
17:00	0	2	0	0	2	0	0	1	3	1	0	4	0	3	4	0	1	0	8	1	14	8	22
17:15	0	1	1	3	2	0	0	0	3	0	0	2	0	2	2	0	0	0	0	0	8	4	12
17:30	0	0	0	3	0	0	2	0	4	2	0	0	0	5	0	0	3	0	3	3	15	5	20
17:45	0	5	0	3	5	1	1	0	0	2	0	2	0	7	2	0	4	0	1	4	11	13	24
Total	0	8	1	9	9	1	3	1	10	5	0	8	0	17	8	0	8	0	12	8	48	30	78
Grand Total	1	9	1	25	11	3	9	2	22	14	0	9	2	31	11	0	14	0	30	14	108	50	158
Apprch %	9.1	81.8	9.1			21.4	64.3	14.3			0.0	81.8	18.2			0.0	100.0	0.0					
Total %	2.0	18.0	2.0		22.0	6.0	18.0	4.0		28.0	0.0	18.0	4.0		22.0	0.0	28.0	0.0		28.0	68.4	31.6	

	M L KING WY Southbound				MACARTHUR BL Westbound				M L KING WY Northbound				MACARTHUR BL Eastbound				
Start Time	RT	TH	LT	App. Total	RT	TH	LT	App. Total	RT	TH	LT	App. Total	RT	TH	LT	App. Total	Int. Total
Peak Hour From 16:00 to 17:45 - Peak 1 of 1																	
Intersection 17:00																	
Volume	0	8	1	9	1	3	1	5	0	8	0	8	0	8	0	8	30
Percent	0.0	88.9	11.1		20.0	60.0	20.0		0.0	100.0	0.0		0.0	100.0	0.0		
17:45 Volume	0	5	0	5	1	1	0	2	0	2	0	2	0	4	0	4	13
Peak Factor																	0.577
High Int. 17:45					17:30				17:00				17:45				
Volume	0	5	0	5	0	2	0	2	0	4	0	4	0	4	0	4	
Peak Factor				0.450				0.625				0.500				0.500	

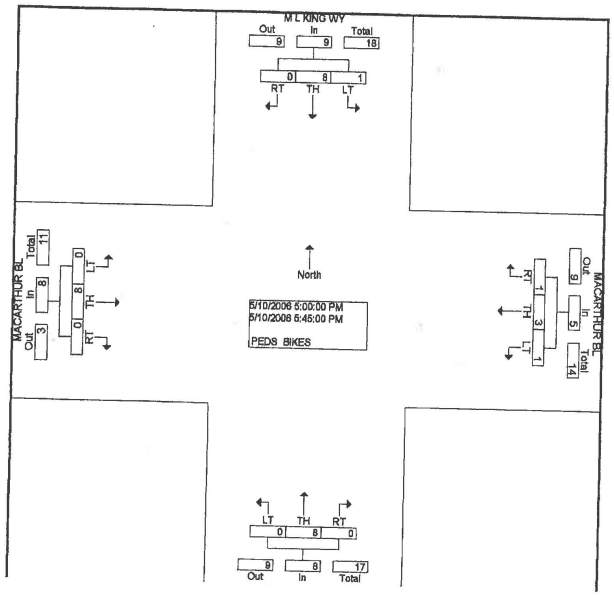

PM 21
OAKLAND
FPW P
TITO [916] 715-4006

MARKS TRAFFIC DATA

#25 P/B PM

File Name : pd-bart-dw-macarther-p
Site Code : 00000000
Start Date : 5/10/2006
Page No : 1

Groups Printed- PEDS BIKES

	BART DW Southbound					MacARTHUR BL Westbound					0 Northbound					MacAUTHUR BL Eastbound					
Start Time	RT	TH	LT	Peds	App. Total	RT	TH	LT	Peds	App. Total	RT	TH	LT	Peds	App. Total	RT	TH	LT	Peds	App. Total	Int. Total
Factor	1.0	1.0	1.0	1.0		1.0	1.0	1.0	1.0		1.0	1.0	1.0	1.0		1.0	1.0	1.0	1.0		
16:00	2	0	1	22	25	7	4	0	0	11	0	0	0	0	0	0	1	1	0	2	38
16:15	9	0	0	16	25	0	1	0	0	1	0	0	0	0	0	0	1	0	0	1	27
16:30	1	0	0	19	20	6	1	0	0	7	0	0	1	0	1	0	1	0	0	1	29
16:45	3	0	1	26	30	0	0	0	0	0	0	0	0	0	0	0	2	0	0	2	32
Total	15	0	2	83	100	13	6	0	0	19	0	0	1	0	1	0	5	1	0	6	126
17:00	2	9	0	20	31	2	2	0	0	4	0	9	0	0	9	1	0	0	0	1	45
17:15	9	0	0	16	25	0	2	0	0	2	0	0	0	0	0	1	1	0	0	2	29
17:30	2	0	1	23	26	1	1	0	0	2	0	0	0	0	0	0	1	0	0	1	29
17:45	0	0	1	20	21	0	1	0	0	1	0	0	0	0	0	0	1	0	0	1	23
Total	13	9	2	79	103	3	6	0	0	9	0	9	0	0	9	2	3	0	0	5	126
Grand Total	28	9	4	162	203	16	12	0	0	28	0	9	1	0	10	2	8	1	0	11	252
Apprch %	13.8	4.4	2.0	79.8		57.1	42.9	0.0	0.0		0.0	90.0	10.0	0.0		18.2	72.7	9.1	0.0		
Total %	11.1	3.6	1.6	64.3	80.6	6.3	4.8	0.0	0.0	11.1	0.0	3.6	0.4	0.0	4.0	0.8	3.2	0.4	0.0	4.4	

	BART DW Southbound					MacARTHUR BL Westbound					0 Northbound					MacAUTHUR BL Eastbound					
Start Time	RT	TH	LT	Peds	App. Total	RT	TH	LT	Peds	App. Total	RT	TH	LT	Peds	App. Total	RT	TH	LT	Peds	App. Total	Int. Total
Peak Hour From 16:00 to 17:45 - Peak 1 of 1																					
Intersection 16:30																					
Volume	15	9	1	81	106	8	5	0	0	13	0	9	1	0	10	2	4	0	0	6	135
Percent	14.2	8.5	0.9	76.4		61.5	38.5	0.0	0.0		0.0	90.0	10.0	0.0		33.3	66.7	0.0	0.0		
17:00																					
Volume	2	9	0	20	31	2	2	0	0	4	0	9	0	0	9	1	0	0	0	1	45
Peak Factor																					
High Int. 17:00						16:30					17:00					16:45					0.750
Volume	2	9	0	20	31	6	1	0	0	7	0	9	0	0	9	0	2	0	0	2	
Peak Factor					0.855					0.464					0.278					0.750	

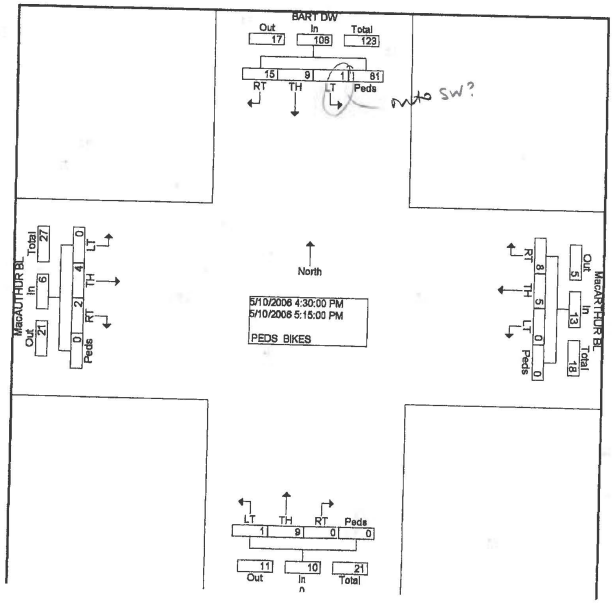

PM 18
OAKLAND
FPW H
TITO [916] 715-4006

MARKS TRAFFIC DATA

#27 P/B (not requested)

File Name : telegraph-38th-p
Site Code : 00000000
Start Date : 5/10/2006
Page No : 1

Groups Printed- PEDS BIKES

	TELEGRAPH AVE Southbound					38TH ST Westbound					TELEGRAPH AVE Northbound					0 Eastbound							
Start Time	RT	TH	LT	PED	App. Total	RT	TH	LT	PED	App. Total	RT	TH	LT	PED	App. Total	RT	TH	LT	PED	App. Total	Exclu. Total	Inclu. Total	Int. Total
Factor	1.0	1.0	1.0	1.0		1.0	1.0	1.0	1.0		1.0	1.0	1.0	1.0		1.0	1.0	1.0	1.0				
16:00	0	6	0	0	6	0	0	0	8	0	0	4	0	0	4	0	0	0	0	0	8	10	18
16:15	0	10	0	1	10	0	0	0	3	0	0	7	0	0	7	0	0	0	0	0	4	17	21
16:30	0	7	0	0	7	0	0	2	12	2	0	4	0	1	4	0	0	0	0	0	13	13	26
16:45	0	7	0	0	7	0	0	0	3	0	0	6	0	2	6	0	0	0	0	0	5	13	18
Total	0	30	0	1	30	0	0	2	26	2	0	21	0	3	21	0	0	0	0	0	30	53	83
17:00	0	9	0	0	9	1	0	0	12	1	0	7	0	0	7	0	0	0	0	0	12	17	29
17:15	0	5	0	0	5	1	0	0	6	1	0	9	0	0	9	0	0	0	0	0	6	15	21
17:30	0	4	0	0	4	1	0	0	14	1	0	9	0	8	9	0	0	0	0	0	22	14	36
17:45	0	13	0	1	13	0	0	0	12	0	0	0	0	0	0	0	0	0	0	0	13	13	26
Total	0	31	0	1	31	3	0	0	44	3	0	25	0	8	25	0	0	0	0	0	53	59	112
Grand Total	0	61	0	2	61	3	0	2	70	5	0	46	0	11	46	0	0	0	0	0	83	112	195
Apprch %	0	100	0			60	0	40			0	100	0			0	0	0					
Total %	0	54.5	0		54.5	2.7	0	1.8		4.5	0	41.1	0		41.1	0	0	0		0	42.6	57.4	

	TELEGRAPH AVE Southbound				38TH ST Westbound				TELEGRAPH AVE Northbound				0 Eastbound				
Start Time	RT	TH	LT	App. Total	RT	TH	LT	App. Total	RT	TH	LT	App. Total	RT	TH	LT	App. Total	Int. Total
Peak Hour Analysis From 16:00 to 17:45 - Peak 1 of 1																	
Peak Hour for Entire Intersection Begins at 16:15																	
16:15	0	10	0	10	0	0	0	0	0	7	0	7	0	0	0	0	17
16:30	0	7	0	7	0	0	2	2	0	4	0	4	0	0	0	0	13
16:45	0	7	0	7	0	0	0	0	0	6	0	6	0	0	0	0	13
17:00	0	9	0	9	1	0	0	1	0	7	0	7	0	0	0	0	17
Total Volume	0	33	0	33	1	0	2	3	0	24	0	24	0	0	0	0	60
% App. Total	0	100	0		33.3	0	66.7		0	100	0		0	0	0		
PHF	.000	.825	.000	.825	.250	.000	.250	.375	.000	.857	.000	.857	.000	.000	.000	.000	.882

PM 22
OAKLAND
FPW B
TITO [916] 715-4006

MARKS TRAFFIC DATA

#28 P/B PM

File Name : pd-telegraph-macarther-p
Site Code : 00000000
Start Date : 5/10/2006
Page No : 1

Groups Printed- PEDS BIKES

	TELEGRAPH AV Southbound					MacARTHUR BL Westbound					TELEGRAPH AV Northbound					MacAUTHUR BL Eastbound					
Start Time	RT	TH	LT	Peds	App. Total	RT	TH	LT	Peds	App. Total	RT	TH	LT	Peds	App. Total	RT	TH	LT	Peds	App. Total	Int. Total
Factor	1.0	1.0	1.0	1.0		1.0	1.0	1.0	1.0		1.0	1.0	1.0	1.0		1.0	1.0	1.0	1.0		
16:00	1	3	2	6	12	2	2	0	9	13	3	6	0	6	15	1	0	0	9	10	50
16:15	9	10	3	6	28	0	0	0	8	8	0	4	0	9	13	0	2	2	8	12	61
16:30	9	8	1	3	21	2	1	0	14	17	0	3	0	2	5	0	0	0	8	8	51
16:45	6	3	1	2	12	0	0	0	3	3	0	10	0	4	14	2	2	1	10	15	44
Total	25	24	7	17	73	4	3	0	34	41	3	23	0	21	47	3	4	3	35	45	206
17:00	0	2	4	9	15	0	3	0	16	19	0	1	1	7	9	0	0	0	14	14	57
17:15	9	8	0	5	22	0	0	0	11	11	0	9	1	5	15	0	1	0	6	7	55
17:30	0	5	3	8	16	6	1	0	10	17	0	10	0	2	12	1	2	0	4	7	52
17:45	0	0	1	4	5	0	1	0	55	56	0	7	2	5	14	1	1	0	15	17	92
Total	9	15	8	26	58	6	5	0	92	103	0	27	4	19	50	2	4	0	39	45	256
Grand Total	34	39	15	43	131	10	8	0	126	144	3	50	4	40	97	5	8	3	74	90	462
Apprch %	26.0	29.8	11.5	32.8		6.9	5.6	0.0	87.5		3.1	51.5	4.1	41.2		5.6	8.9	3.3	82.2		
Total %	7.4	8.4	3.2	9.3	28.4	2.2	1.7	0.0	27.3	31.2	0.6	10.8	0.9	8.7	21.0	1.1	1.7	0.6	16.0	19.5	

	TELEGRAPH AV Southbound					MacARTHUR BL Westbound					TELEGRAPH AV Northbound					MacAUTHUR BL Eastbound					
Start Time	RT	TH	LT	Peds	App. Total	RT	TH	LT	Peds	App. Total	RT	TH	LT	Peds	App. Total	RT	TH	LT	Peds	App. Total	Int. Total
Peak Hour From 16:00 to 17:45 - Peak 1 of 1																					
Intersection	17:00																				
Volume	9	15	8	26	58	6	5	0	92	103	0	27	4	19	50	2	4	0	39	45	256
Percent	15.5	25.9	13.8	44.8		5.8	4.9	0.0	89.3		0.0	54.0	8.0	38.0		4.4	8.9	0.0	86.7		
17:45																					
Volume	0	0	1	4	5	0	1	0	55	56	0	7	2	5	14	1	1	0	15	17	92
Peak Factor																					0.696
High Int.	17:15					17:45					17:15					17:45					
Volume	9	8	0	5	22	0	1	0	55	56	0	9	1	5	15	1	1	0	15	17	
Peak Factor					0.659					0.460					0.833					0.662	

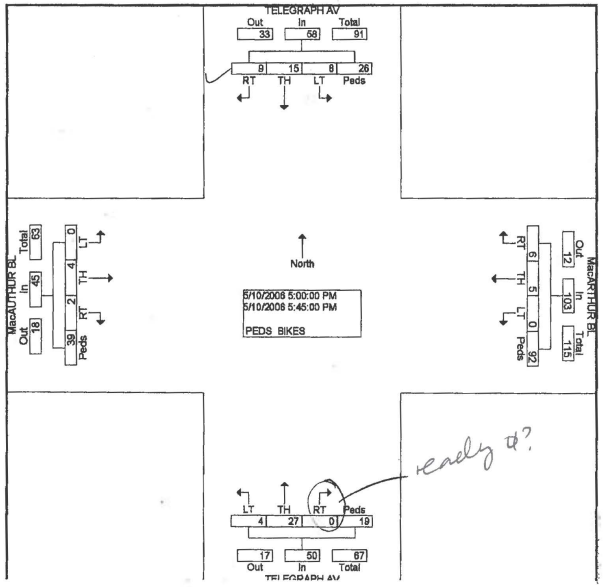

early ?

PM 27
OAKLAND
FPW B
TITO [916] 715-4006

MARKS TRAFFIC DATA

#50 P/B PM

File Name : ml-king-39th-p
Site Code : 00000000
Start Date : 5/10/2006
Page No : 1

Groups Printed- PEDS BIKES

	M L KING WY Southbound					39TH ST Westbound					M L KING WY Northbound					39TH ST Eastbound							
Start Time	RT	TH	LT	PED	App. Total	RT	TH	LT	PED	App. Total	RT	TH	LT	PED	App. Total	RT	TH	LT	PED	App. Total	Exclu. Total	Inclu. Total	Int. Total
Factor	1.0	1.0	1.0	1.0		1.0	1.0	1.0	1.0		1.0	1.0	1.0	1.0		1.0	1.0	1.0	1.0				
16:00	0	0	0	0	0	0	2	0	2	2	0	0	0	0	0	0	1	0	4	1	6	3	9
16:15	0	0	0	0	0	0	0	0	3	0	0	0	0	0	0	0	3	0	9	3	12	3	15
16:30	0	0	0	0	0	0	1	0	2	1	0	0	0	0	0	0	0	0	3	0	5	1	6
16:45	0	0	0	1	0	0	2	0	1	2	0	0	0	0	0	0	2	0	12	2	14	4	18
Total	0	0	0	1	0	0	5	0	8	5	0	0	0	0	0	0	6	0	28	6	37	11	48
17:00	0	0	0	2	0	0	2	0	8	2	0	0	0	2	0	0	1	1	10	2	20	4	24
17:15	0	0	0	1	0	0	2	0	6	2	0	0	0	1	0	0	1	0	8	1	16	3	19
17:30	0	0	0	1	0	0	0	0	7	0	0	0	0	1	0	0	5	0	8	5	17	5	22
17:45	0	0	0	0	0	0	1	0	9	1	0	0	0	0	0	0	2	0	8	2	17	3	20
Total	0	0	0	4	0	0	5	0	28	5	0	0	0	4	0	0	9	1	34	10	70	15	85
Grand Total	0	0	0	5	0	0	10	0	36	10	0	0	0	4	0	0	15	1	62	16	107	26	133
Apprch %	0.0	0.0	0.0			0.0	100.0	0.0			0.0	0.0	0.0			0.0	93.8	6.3					
Total %	0.0	0.0	0.0		0.0	0.0	38.5	0.0		38.5	0.0	0.0	0.0		0.0	0.0	57.7	3.8		61.5	80.5	19.5	

	M L KING WY Southbound				39TH ST Westbound				M L KING WY Northbound				39TH ST Eastbound				
Start Time	RT	TH	LT	App. Total	RT	TH	LT	App. Total	RT	TH	LT	App. Total	RT	TH	LT	App. Total	Int. Total
Peak Hour From 16:00 to 17:45 - Peak 1 of 1																	
Intersection	16:45																
Volume	0	0	0	0	0	6	0	6	0	0	0	0	0	9	1	10	16
Percent	0.0	0.0	0.0		0.0	100.0	0.0		0.0	0.0	0.0		0.0	90.0	10.0		
17:30 Volume	0	0	0	0	0	0	0	0	0	0	0	0	0	5	0	5	5
Peak Factor																	0.800
High Int.	3:45:00 PM				16:45				3:45:00 PM				17:30				
Volume	0	0	0	0	0	2	0	2	0	0	0	0	0	5	0	5	
Peak Factor								0.750								0.500	

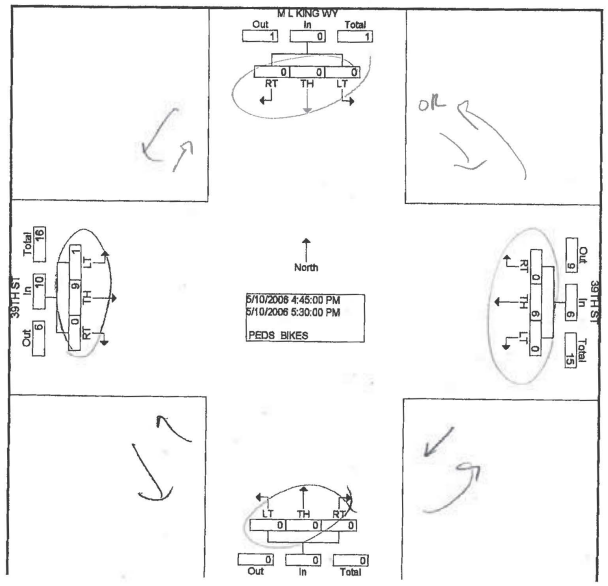

?

APPENDIX B:
EXISTING CONDITIONS INTERSECTION
LEVEL OF SERVICE CALCULATION WORKSHEETS

Movement	EBL	EBT	EBR	WBL	WBT	WBR	NBL	NBT	NBR	SBL	SBT	SBR
Lane Configurations												
Ideal Flow (vphpl)	1900	1900	1900	1900	1900	1900	1900	1900	1900	1900	1900	1900
Lane Width	12	12	12	12	12	12	16	16	16	16	16	16
Total Lost time (s)	4.0	4.0		4.0	4.0			2.0			2.0	
Lane Util. Factor	1.00	0.91		1.00	0.91			1.00			1.00	
Frpb, ped/bikes	1.00	0.99		1.00	1.00			1.00			0.99	
Flpb, ped/bikes	1.00	1.00		1.00	1.00			1.00			1.00	
Frt	1.00	0.98		1.00	0.98			0.99			0.95	
Flt Protected	0.95	1.00		0.95	1.00			0.98			0.99	
Satd. Flow (prot)	1770	4937		1764	4973			2032			1955	
Flt Permitted	0.95	1.00		0.24	1.00			0.48			0.77	
Satd. Flow (perm)	1770	4937		443	4973			1254			1529	
Volume (vph)	288	906	170	65	1219	165	206	259	50	146	272	246
Peak-hour factor, PHF	0.95	0.95	0.95	0.95	0.95	0.95	0.95	0.95	0.95	0.95	0.95	0.95
Adj. Flow (vph)	303	954	179	68	1283	174	217	273	53	154	286	259
RTOR Reduction (vph)	0	27	0	0	17	0	0	10	0	0	60	0
Lane Group Flow (vph)	303	1106	0	68	1440	0	0	533	0	0	639	0
Confl. Peds. (#/hr)			10	10		10	10		10	10		10
Turn Type	Prot			Perm			Perm			Perm		
Protected Phases	7	4			8			2			6	
Permitted Phases				8			2			6		
Actuated Green, G (s)	21.0	56.0		31.0	31.0			37.5			37.5	
Effective Green, g (s)	21.0	56.0		31.0	31.0			38.0			38.0	
Actuated g/C Ratio	0.21	0.56		0.31	0.31			0.38			0.38	
Clearance Time (s)	4.0	4.0		4.0	4.0			2.5			2.5	
Lane Grp Cap (vph)	372	2765		137	1542			477			581	
v/s Ratio Prot	c0.17	0.22			c0.29							
v/s Ratio Perm				0.15				c0.43			0.42	
v/c Ratio	0.81	0.40		0.50	0.93			1.12			1.10	
Uniform Delay, d1	37.6	12.5		28.1	33.5			31.0			31.0	
Progression Factor	1.00	1.00		1.00	1.00			1.00			1.00	
Incremental Delay, d2	17.6	0.4		12.3	11.8			77.4			67.9	
Delay (s)	55.2	12.9		40.4	45.3			108.4			98.9	
Level of Service	E	B		D	D			F			F	
Approach Delay (s)		21.8			45.1			108.4			98.9	
Approach LOS		C			D			F			F	

Intersection Summary				
HCM Average Control Delay	54.3	HCM Level of Service	D	
HCM Volume to Capacity ratio	0.98			
Actuated Cycle Length (s)	100.0	Sum of lost time (s)	10.0	
Intersection Capacity Utilization	102.8%	ICU Level of Service	G	
Analysis Period (min)	15			

c Critical Lane Group

Movement	EBL	EBT	EBR	WBL	WBT	WBR	NBL	NBT	NBR	SBL	SBT	SBR
Lane Configurations												
Ideal Flow (vphpl)	1900	1900	1900	1900	1900	1900	1900	1900	1900	1900	1900	1900
Total Lost time (s)		4.0		4.0	4.0			4.0		4.0	4.0	
Lane Util. Factor		1.00		0.95	0.95			0.95		1.00	0.95	
Frpb, ped/bikes		1.00		1.00	0.99			0.99		1.00	0.95	
Flpb, ped/bikes		1.00		1.00	1.00			1.00		1.00	1.00	
Frt		0.94		1.00	0.92			0.97		1.00	0.95	
Flt Protected		0.97		0.95	1.00			1.00		0.95	1.00	
Satd. Flow (prot)		1699		1681	1607			3406		1770	3200	
Flt Permitted		0.80		0.75	1.00			0.94		0.95	1.00	
Satd. Flow (perm)		1404		1321	1607			3215		1770	3200	
Volume (vph)	8	0	7	109	95	119	10	966	224	72	654	358
Peak-hour factor, PHF	0.93	0.93	0.93	0.93	0.93	0.93	0.93	0.93	0.93	0.93	0.93	0.93
Adj. Flow (vph)	9	0	8	117	102	128	11	1039	241	77	703	385
RTOR Reduction (vph)	0	8	0	0	61	0	0	14	0	0	50	0
Lane Group Flow (vph)	0	9	0	117	169	0	0	1277	0	77	1038	0
Confl. Peds. (#/hr)						4	44		12	12		44
Turn Type	Perm			Perm			Perm			Prot		
Protected Phases		7			8			2		1	6	
Permitted Phases	7			8			2					
Actuated Green, G (s)		3.3		13.0	13.0			48.7		7.0	60.2	
Effective Green, g (s)		3.8		13.5	13.5			49.2		7.5	60.7	
Actuated g/C Ratio		0.04		0.15	0.15			0.55		0.08	0.67	
Clearance Time (s)		4.5		4.5	4.5			4.5		4.5	4.5	
Vehicle Extension (s)		2.0		2.0	2.0			2.0		2.0	2.0	
Lane Grp Cap (vph)		59		198	241			1758		148	2158	
v/s Ratio Prot										0.04	c0.32	
v/s Ratio Perm		c0.01		0.09	0.11			c0.40				
v/c Ratio		0.16		0.59	0.70			0.73		0.52	0.48	
Uniform Delay, d1		41.6		35.7	36.3			15.3		39.5	7.1	
Progression Factor		1.00		1.00	1.00			1.06		1.00	1.00	
Incremental Delay, d2		0.5		3.1	7.3			1.4		1.5	0.8	
Delay (s)		42.0		38.8	43.6			17.7		41.0	7.8	
Level of Service		D		D	D			B		D	A	
Approach Delay (s)		42.0			42.0			17.7			10.0	
Approach LOS		D			D			B			B	

Intersection Summary				
HCM Average Control Delay	17.7	HCM Level of Service	B	
HCM Volume to Capacity ratio	0.68			
Actuated Cycle Length (s)	90.0	Sum of lost time (s)	16.0	
Intersection Capacity Utilization	77.6%	ICU Level of Service	D	
Analysis Period (min)	15			

c Critical Lane Group

Movement	EBL	EBT	EBR	WBL	WBT	WBR	NBL	NBT	NBR	SBL	SBT	SBR
Lane Configurations												
Ideal Flow (vphpl)	1900	1900	1900	1900	1900	1900	1900	1900	1900	1900	1900	1900
Total Lost time (s)	4.0	4.0		4.0	4.0		4.0	4.0		4.0	4.0	
Lane Util. Factor	0.97	0.95		1.00	0.95		1.00	0.95		1.00	0.95	
Frpb, ped/bikes	1.00	0.99		1.00	1.00		1.00	0.99		1.00	0.98	
Flpb, ped/bikes	1.00	1.00		1.00	1.00		1.00	1.00		1.00	1.00	
Frt	1.00	0.98		1.00	0.96		1.00	0.98		1.00	0.97	
Flt Protected	0.95	1.00		0.95	1.00		0.95	1.00		0.95	1.00	
Satd. Flow (prot)	3433	3433		1770	3398		1770	3437		1770	3350	
Flt Permitted	0.95	1.00		0.95	1.00		0.95	1.00		0.95	1.00	
Satd. Flow (perm)	3433	3433		1770	3398		1770	3437		1770	3350	
Volume (vph)	450	533	85	101	677	209	107	567	99	140	496	143
Peak-hour factor, PHF	0.96	0.96	0.96	0.96	0.96	0.96	0.96	0.96	0.96	0.96	0.96	0.96
Adj. Flow (vph)	469	555	89	105	705	218	111	591	103	146	517	149
RTOR Reduction (vph)	0	14	0	0	32	0	0	16	0	0	28	0
Lane Group Flow (vph)	469	630	0	105	891	0	111	678	0	146	638	0
Confl. Peds. (#/hr)			24			6			28			36
Turn Type	Prot			Prot			Prot			Prot		
Protected Phases	7	4		3	8		5	2		1	6	
Permitted Phases												
Actuated Green, G (s)	13.0	30.6		7.9	25.5		8.0	24.4		10.1	26.5	
Effective Green, g (s)	12.5	31.6		7.4	26.5		7.5	25.4		9.6	27.5	
Actuated g/C Ratio	0.14	0.35		0.08	0.29		0.08	0.28		0.11	0.31	
Clearance Time (s)	3.5	5.0		3.5	5.0		3.5	5.0		3.5	5.0	
Vehicle Extension (s)	2.0	2.0		2.0	2.0		2.0	2.0		2.0	2.0	
Lane Grp Cap (vph)	477	1205		146	1001		148	970		189	1024	
v/s Ratio Prot	c0.14	0.18		0.06	c0.26		0.06	c0.20		c0.08	0.19	
v/s Ratio Perm												
v/c Ratio	0.98	0.52		0.72	0.89		0.75	0.70		0.77	0.62	
Uniform Delay, d1	38.6	23.2		40.3	30.4		40.3	28.9		39.1	26.8	
Progression Factor	1.00	1.00		1.00	1.00		1.00	1.00		1.12	0.82	
Incremental Delay, d2	36.5	0.2		13.2	9.5		17.1	4.2		14.6	2.5	
Delay (s)	75.2	23.4		53.4	39.9		57.4	33.1		58.3	24.6	
Level of Service	E	C		D	D		E	C		E	C	
Approach Delay (s)		45.2			41.3			36.4			30.7	
Approach LOS		D			D			D			C	

Intersection Summary			
HCM Average Control Delay	39.1	HCM Level of Service	D
HCM Volume to Capacity ratio	0.82		
Actuated Cycle Length (s)	90.0	Sum of lost time (s)	16.0
Intersection Capacity Utilization	78.7%	ICU Level of Service	D
Analysis Period (min)	15		

c Critical Lane Group

Movement	EBL	EBT	EBR	WBL	WBT	WBR	NBL	NBT	NBR	SBL	SBT	SBR
Lane Configurations												
Ideal Flow (vphpl)	1900	1900	1900	1900	1900	1900	1900	1900	1900	1900	1900	1900
Total Lost time (s)		4.0						4.0		4.0	4.0	
Lane Util. Factor		1.00						0.95		0.97	0.95	
Frt		0.86						0.93		1.00	0.97	
Flt Protected		1.00						1.00		0.95	1.00	
Satd. Flow (prot)		1611						3294		3433	3446	
Flt Permitted		1.00						0.95		0.95	1.00	
Satd. Flow (perm)		1611						3124		3433	3446	
Volume (vph)	0	0	7	0	0	0	7	316	272	1585	265	56
Peak-hour factor, PHF	0.92	0.92	0.92	0.92	0.92	0.92	0.92	0.92	0.92	0.92	0.92	0.92
Adj. Flow (vph)	0	0	8	0	0	0	8	343	296	1723	288	61
RTOR Reduction (vph)	0	8	0	0	0	0	0	24	0	0	0	0
Lane Group Flow (vph)	0	0	0	0	0	0	0	623	0	1723	349	0
Turn Type										Prot		
Protected Phases								2		1	6	
Permitted Phases												
Actuated Green, G (s)		0.0						8.0		29.0	45.0	
Effective Green, g (s)		0.0						8.0		29.0	45.0	
Actuated g/C Ratio		0.00						0.18		0.64	1.00	
Clearance Time (s)								4.0		4.0	2.0	
Lane Grp Cap (vph)		0						555		2212	3446	
v/s Ratio Prot										c0.50	0.10	
v/s Ratio Perm								c0.20				
v/c Ratio		0.00						10.21dr		0.78	0.10	
Uniform Delay, d1		22.5						18.5		5.7	0.0	
Progression Factor		1.00						0.78		1.00	1.00	
Incremental Delay, d2		0.0						75.7		2.8	0.1	
Delay (s)		22.5						90.1		8.5	0.1	
Level of Service		C						F		A	A	
Approach Delay (s)		22.5			0.0			90.1			7.1	
Approach LOS		C			A			F			A	

Intersection Summary			
HCM Average Control Delay	26.8	HCM Level of Service	C
HCM Volume to Capacity ratio	0.85		
Actuated Cycle Length (s)	45.0	Sum of lost time (s)	8.0
Intersection Capacity Utilization	76.2%	ICU Level of Service	D
Analysis Period (min)	15		

dr Defacto Right Lane. Recode with 1 though lane as a right lane.
c Critical Lane Group

Movement	EBL	EBT	EBR	WBL	WBT	WBR	NBL	NBT	NBR	SBL	SBT	SBR
Lane Configurations												
Ideal Flow (vphpl)	1900	1900	1900	1900	1900	1900	1900	1900	1900	1900	1900	1900
Total Lost time (s)		4.0			4.0			4.0			4.0	
Lane Util. Factor		1.00			1.00			0.95			0.95	
Frpb, ped/bikes		0.97			0.96			0.98			0.99	
Flpb, ped/bikes		0.97			0.96			1.00			1.00	
Frt		0.98			0.94			0.98			0.99	
Flt Protected		0.98			0.98			1.00			1.00	
Satd. Flow (prot)		1676			1596			3385			3457	
Flt Permitted		0.79			0.88			0.92			0.88	
Satd. Flow (perm)		1364			1419			3137			3059	
Volume (vph)	69	50	23	51	44	72	23	437	80	41	419	28
Peak-hour factor, PHF	0.90	0.90	0.90	0.90	0.90	0.90	0.90	0.90	0.90	0.90	0.90	0.90
Adj. Flow (vph)	77	56	26	57	49	80	26	486	89	46	466	31
RTOR Reduction (vph)	0	15	0	0	53	0	0	31	0	0	10	0
Lane Group Flow (vph)	0	144	0	0	133	0	0	570	0	0	533	0
Confl. Peds. (#/hr)	100		100	100		100	100		100	100		100
Turn Type	Perm			Perm			Perm			Perm		
Protected Phases		4			8			2			6	
Permitted Phases	4			8			2			6		
Actuated Green, G (s)		15.0			15.0			22.0			22.0	
Effective Green, g (s)		15.0			15.0			22.0			22.0	
Actuated g/C Ratio		0.33			0.33			0.49			0.49	
Clearance Time (s)		4.0			4.0			4.0			4.0	
Lane Grp Cap (vph)		455			473			1534			1496	
v/s Ratio Prot												
v/s Ratio Perm		c0.11			0.09			c0.18			0.17	
v/c Ratio		0.32			0.28			0.37			0.36	
Uniform Delay, d1		11.2			11.0			7.2			7.1	
Progression Factor		1.00			1.00			1.00			1.00	
Incremental Delay, d2		1.8			1.5			0.7			0.7	
Delay (s)		13.0			12.5			7.9			7.8	
Level of Service		B			B			A			A	
Approach Delay (s)		13.0			12.5			7.9			7.8	
Approach LOS		B			B			A			A	

Intersection Summary			
HCM Average Control Delay	9.0	HCM Level of Service	A
HCM Volume to Capacity ratio	0.35		
Actuated Cycle Length (s)	45.0	Sum of lost time (s)	8.0
Intersection Capacity Utilization	60.5%	ICU Level of Service	B
Analysis Period (min)	15		
c Critical Lane Group			

Movement	EBL	EBT	EBR	WBL	WBT	WBR	NBL	NBT	NBR	SBL	SBT	SBR
Lane Configurations												
Ideal Flow (vphpl)	1900	1900	1900	1900	1900	1900	1900	1900	1900	1900	1900	1900
Total Lost time (s)		4.0			4.0			4.0			4.0	
Lane Util. Factor		1.00			1.00			0.95			0.91	
Frpb, ped/bikes		0.96			0.96			0.99			0.98	
Flpb, ped/bikes		0.97			0.98			1.00			1.00	
Frt		0.96			0.96			0.99			0.99	
Flt Protected		0.99			0.99			1.00			1.00	
Satd. Flow (prot)		1641			1659			3456			4882	
Flt Permitted		0.82			0.85			0.91			0.81	
Satd. Flow (perm)		1371			1422			3135			3987	
Volume (vph)	51	74	52	26	57	36	22	910	45	61	966	83
Peak-hour factor, PHF	0.90	0.90	0.90	0.90	0.90	0.90	0.90	0.90	0.90	0.90	0.90	0.90
Adj. Flow (vph)	57	82	58	29	63	40	24	1011	50	68	1073	92
RTOR Reduction (vph)	0	24	0	0	26	0	0	2	0	0	6	0
Lane Group Flow (vph)	0	173	0	0	106	0	0	1083	0	0	1227	0
Confl. Peds. (#/hr)	100		100	100		100	100		100	100		100
Turn Type	Perm			Perm			Perm			Perm		
Protected Phases		4			4			2			6	
Permitted Phases	4			4			2			6		
Actuated Green, G (s)		13.1			13.1			62.9			62.9	
Effective Green, g (s)		13.6			13.6			63.4			63.4	
Actuated g/C Ratio		0.16			0.16			0.75			0.75	
Clearance Time (s)		4.5			4.5			4.5			4.5	
Vehicle Extension (s)		2.0			2.0			2.0			2.0	
Lane Grp Cap (vph)		219			228			2338			2974	
v/s Ratio Prot												
v/s Ratio Perm		c0.13			0.07			c0.35			0.31	
v/c Ratio		0.79			0.46			0.46			0.41	
Uniform Delay, d1		34.3			32.4			4.2			4.0	
Progression Factor		1.00			1.00			1.50			1.00	
Incremental Delay, d2		15.8			0.5			0.7			0.4	
Delay (s)		50.1			32.9			6.9			4.4	
Level of Service		D			C			A			A	
Approach Delay (s)		50.1			32.9			6.9			4.4	
Approach LOS		D			C			A			A	

Intersection Summary			
HCM Average Control Delay	10.3	HCM Level of Service	B
HCM Volume to Capacity ratio	0.52		
Actuated Cycle Length (s)	85.0	Sum of lost time (s)	8.0
Intersection Capacity Utilization	87.2%	ICU Level of Service	E
Analysis Period (min)	15		
c Critical Lane Group			

Movement	EBL	EBT	EBR	WBL	WBT	WBR	NBL	NBT	NBR	SBL	SBT	SBR
Lane Configurations												
Ideal Flow (vphpl)	1900	1900	1900	1900	1900	1900	1900	1900	1900	1900	1900	1900
Total Lost time (s)	4.0	4.0		4.0	4.0		4.0	4.0		4.0	4.0	
Lane Util. Factor	1.00	0.95		1.00	0.95		1.00	1.00		1.00	1.00	
Frpb, ped/bikes	1.00	1.00		1.00	0.99		1.00	1.00		1.00	1.00	
Flpb, ped/bikes	0.98	1.00		0.99	1.00		1.00	1.00		0.98	1.00	
Frt	1.00	0.98		1.00	0.99		1.00	0.98		1.00	0.99	
Flt Protected	0.95	1.00		0.95	1.00		0.95	1.00		0.95	1.00	
Satd. Flow (prot)	1730	3474		1756	3474		1766	1819		1733	1841	
Flt Permitted	0.33	1.00		0.48	1.00		0.62	1.00		0.63	1.00	
Satd. Flow (perm)	606	3474		879	3474		1145	1819		1154	1841	
Volume (vph)	19	291	35	25	437	39	82	159	23	85	187	15
Peak-hour factor, PHF	0.91	0.91	0.91	0.91	0.91	0.91	0.91	0.91	0.91	0.91	0.91	0.91
Adj. Flow (vph)	21	320	38	27	480	43	90	175	25	93	205	16
RTOR Reduction (vph)	0	11	0	0	9	0	0	7	0	0	3	0
Lane Group Flow (vph)	21	347	0	27	514	0	90	193	0	93	218	0
Confl. Peds. (#/hr)	30		12	12		30	6		54	54		6
Turn Type	Perm			Perm			Perm			Perm		
Protected Phases		4			8			2			6	
Permitted Phases	4			8			2			6		
Actuated Green, G (s)	24.0	24.0		24.0	24.0		49.5	49.5		49.5	49.5	
Effective Green, g (s)	23.0	23.0		23.0	23.0		49.0	49.0		49.0	49.0	
Actuated g/C Ratio	0.29	0.29		0.29	0.29		0.61	0.61		0.61	0.61	
Clearance Time (s)	3.0	3.0		3.0	3.0		3.5	3.5		3.5	3.5	
Lane Grp Cap (vph)	174	999		253	999		701	1114		707	1128	
v/s Ratio Prot		0.10			c0.15			0.11			c0.12	
v/s Ratio Perm	0.03			0.03			0.08			0.08		
v/c Ratio	0.12	0.35		0.11	0.51		0.13	0.17		0.13	0.19	
Uniform Delay, d1	21.0	22.6		20.9	23.8		6.5	6.7		6.5	6.8	
Progression Factor	1.00	1.00		0.91	0.98		1.00	1.00		1.00	1.00	
Incremental Delay, d2	1.4	1.0		0.8	1.9		0.4	0.3		0.4	0.4	
Delay (s)	22.5	23.5		20.0	25.3		6.9	7.1		6.9	7.2	
Level of Service	C	C		B	C		A	A		A	A	
Approach Delay (s)		23.5			25.1			7.0			7.1	
Approach LOS		C			C			A			A	

Intersection Summary			
HCM Average Control Delay	17.6	HCM Level of Service	B
HCM Volume to Capacity ratio	0.30		
Actuated Cycle Length (s)	80.0	Sum of lost time (s)	8.0
Intersection Capacity Utilization	75.5%	ICU Level of Service	D
Analysis Period (min)	15		
c Critical Lane Group			

Movement	EBL	EBT	EBR	WBL	WBT	WBR	NBL	NBT	NBR	SBL	SBT	SBR
Lane Configurations												
Ideal Flow (vphpl)	1900	1900	1900	1900	1900	1900	1900	1900	1900	1900	1900	1900
Total Lost time (s)	4.0	4.0		4.0	4.0			4.0			4.0	
Lane Util. Factor	1.00	0.95		1.00	0.95			0.95			0.95	
Frpb, ped/bikes	1.00	0.99		1.00	1.00			0.99			1.00	
Flpb, ped/bikes	0.99	1.00		0.98	1.00			1.00			1.00	
Frt	1.00	0.98		1.00	1.00			0.97			0.97	
Flt Protected	0.95	1.00		0.95	1.00			0.99			0.99	
Satd. Flow (prot)	1759	3457		1736	3519			3361			3374	
Flt Permitted	0.45	1.00		0.48	1.00			0.85			0.91	
Satd. Flow (perm)	839	3457		871	3519			2885			3086	
Volume (vph)	15	361	48	18	429	14	61	100	41	16	66	25
Peak-hour factor, PHF	0.95	0.95	0.95	0.95	0.95	0.95	0.95	0.95	0.95	0.95	0.95	0.95
Adj. Flow (vph)	16	380	51	19	452	15	64	105	43	17	69	26
RTOR Reduction (vph)	0	13	0	0	3	0	0	25	0	0	15	0
Lane Group Flow (vph)	16	418	0	19	464	0	0	187	0	0	97	0
Confl. Peds. (#/hr)	18		54	54		18	4		18	18		4
Turn Type	Perm			Perm			Perm			Perm		
Protected Phases		4			8			2			6	
Permitted Phases	4			8			2			6		
Actuated Green, G (s)	38.0	38.0		38.0	38.0			32.0			32.0	
Effective Green, g (s)	39.0	39.0		39.0	39.0			33.0			33.0	
Actuated g/C Ratio	0.49	0.49		0.49	0.49			0.41			0.41	
Clearance Time (s)	5.0	5.0		5.0	5.0			5.0			5.0	
Lane Grp Cap (vph)	409	1685		425	1716			1190			1273	
v/s Ratio Prot		0.12			c0.13							
v/s Ratio Perm	0.02			0.02				c0.06			0.03	
v/c Ratio	0.04	0.25		0.04	0.27			0.16			0.08	
Uniform Delay, d1	10.7	12.0		10.7	12.1			14.8			14.3	
Progression Factor	0.93	1.05		1.41	1.46			0.40			1.00	
Incremental Delay, d2	0.2	0.3		0.2	0.4			0.3			0.1	
Delay (s)	10.1	12.9		15.4	18.0			6.2			14.4	
Level of Service	B	B		B	B			A			B	
Approach Delay (s)		12.8			17.9			6.2			14.4	
Approach LOS		B			B			A			B	

Intersection Summary			
HCM Average Control Delay	13.8	HCM Level of Service	B
HCM Volume to Capacity ratio	0.22		
Actuated Cycle Length (s)	80.0	Sum of lost time (s)	8.0
Intersection Capacity Utilization	51.8%	ICU Level of Service	A
Analysis Period (min)	15		
c Critical Lane Group			

Movement	EBL	EBT	EBR	WBL	WBT	WBR	NBL	NBT	NBR	SBL	SBT	SBR
Lane Configurations												
Ideal Flow (vphpl)	1900	1900	1900	1900	1900	1900	1900	1900	1900	1900	1900	1900
Total Lost time (s)	4.0	4.0		4.0	4.0			4.0			4.0	
Lane Util. Factor	1.00	0.95		1.00	0.95			0.95			0.95	
Frpb, ped/bikes	1.00	1.00		1.00	1.00			0.99			1.00	
Flpb, ped/bikes	0.99	1.00		0.98	1.00			1.00			1.00	
Frt	1.00	0.99		1.00	0.98			0.97			0.99	
Flt Protected	0.95	1.00		0.95	1.00			1.00			0.99	
Satd. Flow (prot)	1758	3499		1727	3453			3395			3434	
Flt Permitted	0.47	1.00		0.50	1.00			0.91			0.80	
Satd. Flow (perm)	869	3499		904	3453			3093			2788	
Volume (vph)	31	369	22	54	373	58	31	248	69	71	212	29
Peak-hour factor, PHF	0.96	0.96	0.96	0.96	0.96	0.96	0.96	0.96	0.96	0.96	0.96	0.96
Adj. Flow (vph)	32	384	23	56	389	60	32	258	72	74	221	30
RTOR Reduction (vph)	0	5	0	0	15	0	0	27	0	0	10	0
Lane Group Flow (vph)	32	402	0	56	434	0	0	335	0	0	315	0
Confl. Peds. (#/hr)	13		71	71		13	22		22	22		22
Turn Type	Perm			Perm			Perm			Perm		
Protected Phases		4			8			2			6	
Permitted Phases	4			8			2			6		
Actuated Green, G (s)	41.5	41.5		41.5	41.5			32.0			32.0	
Effective Green, g (s)	41.0	41.0		41.0	41.0			31.0			31.0	
Actuated g/C Ratio	0.51	0.51		0.51	0.51			0.39			0.39	
Clearance Time (s)	3.5	3.5		3.5	3.5			3.0			3.0	
Lane Grp Cap (vph)	445	1793		463	1770			1199			1080	
v/s Ratio Prot		0.11			c0.13							
v/s Ratio Perm	0.04			0.06				0.11			c0.11	
v/c Ratio	0.07	0.22		0.12	0.25			0.28			0.29	
Uniform Delay, d1	9.9	10.7		10.1	10.9			16.8			16.9	
Progression Factor	1.33	1.43		1.00	1.00			0.70			1.00	
Incremental Delay, d2	0.3	0.3		0.5	0.3			0.6			0.7	
Delay (s)	13.4	15.7		10.7	11.2			12.4			17.6	
Level of Service	B	B		B	B			B			B	
Approach Delay (s)		15.5			11.1			12.4			17.6	
Approach LOS		B			B			B			B	

Intersection Summary			
HCM Average Control Delay	13.9	HCM Level of Service	B
HCM Volume to Capacity ratio	0.27		
Actuated Cycle Length (s)	80.0	Sum of lost time (s)	8.0
Intersection Capacity Utilization	100.0%	ICU Level of Service	F
Analysis Period (min)	15		
c Critical Lane Group			

Movement	EBT	EBR	WBL	WBT	NBL	NBR
Lane Configurations						
Sign Control	Free			Free	Stop	
Grade	0%			0%	0%	
Volume (veh/h)	440	59	101	472	0	0
Peak Hour Factor	0.91	0.91	0.91	0.91	0.91	0.91
Hourly flow rate (vph)	484	65	111	519	0	0
Pedestrians					266	
Lane Width (ft)					0.0	
Walking Speed (ft/s)					4.0	
Percent Blockage					0	
Right turn flare (veh)						
Median type					None	
Median storage veh)						
Upstream signal (ft)	673			487		
pX, platoon unblocked					0.99	
vC, conflicting volume			814		1263	540
vC1, stage 1 conf vol						
vC2, stage 2 conf vol						
vCu, unblocked vol			814		1257	540
tC, single (s)			4.1		6.8	6.9
tC, 2 stage (s)						
tF (s)			2.2		3.5	3.3
p0 queue free %			86		100	100
cM capacity (veh/h)			809		140	486

Direction, Lane #	EB 1	EB 2	WB 1	WB 2	WB 3
Volume Total	322	226	111	259	259
Volume Left	0	0	111	0	0
Volume Right	0	65	0	0	0
cSH	1700	1700	809	1700	1700
Volume to Capacity	0.19	0.13	0.14	0.15	0.15
Queue Length 95th (ft)	0	0	12	0	0
Control Delay (s)	0.0	0.0	10.2	0.0	0.0
Lane LOS			B		
Approach Delay (s)	0.0		1.8		
Approach LOS					

Intersection Summary			
Average Delay	1.0		
Intersection Capacity Utilization	27.1%	ICU Level of Service	A
Analysis Period (min)	15		

Movement	EBT	EBR	WBL	WBT	NBL	NBR
Lane Configurations						
Sign Control	Free			Free	Stop	
Grade	0%			0%	0%	
Volume (veh/h)	427	13	0	573	0	18
Peak Hour Factor	0.93	0.93	0.93	0.93	0.93	0.93
Hourly flow rate (vph)	459	14	0	616	0	19
Pedestrians				123	123	
Lane Width (ft)				12.0	12.0	
Walking Speed (ft/s)				4.0	4.0	
Percent Blockage				10	10	
Right turn flare (veh)						
Median type					None	
Median storage veh)						
Upstream signal (ft)	754			406		
pX, platoon unblocked					0.92	
vC, conflicting volume			596		897	483
vC1, stage 1 conf vol						
vC2, stage 2 conf vol						
vCu, unblocked vol			596		801	483
tC, single (s)			4.1		6.8	6.9
tC, 2 stage (s)						
tF (s)			2.2		3.5	3.3
p0 queue free %			100		100	95
cM capacity (veh/h)			876		266	427

Direction, Lane #	EB 1	EB 2	WB 1	WB 2	NB 1
Volume Total	306	167	308	308	19
Volume Left	0	0	0	0	0
Volume Right	0	14	0	0	19
cSH	1700	1700	1700	1700	427
Volume to Capacity	0.18	0.10	0.18	0.18	0.05
Queue Length 95th (ft)	0	0	0	0	4
Control Delay (s)	0.0	0.0	0.0	0.0	13.8
Lane LOS					B
Approach Delay (s)	0.0		0.0		13.8
Approach LOS					B

Intersection Summary			
Average Delay	0.2		
Intersection Capacity Utilization	35.7%	ICU Level of Service	A
Analysis Period (min)	15		

Movement	EBT	EBR	WBL	WBT	NBL	NBR
Lane Configurations						
Sign Control	Free			Free	Stop	
Grade	0%			0%	0%	
Volume (veh/h)	442	3	0	573	0	54
Peak Hour Factor	0.96	0.96	0.96	0.96	0.96	0.96
Hourly flow rate (vph)	460	3	0	597	0	56
Pedestrians				123	123	
Lane Width (ft)				12.0	12.0	
Walking Speed (ft/s)				4.0	4.0	
Percent Blockage				10	10	
Right turn flare (veh)						
Median type					None	
Median storage veh)						
Upstream signal (ft)	971			189		
pX, platoon unblocked					0.90	
vC, conflicting volume			587		883	478
vC1, stage 1 conf vol						
vC2, stage 2 conf vol						
vCu, unblocked vol			587		755	478
tC, single (s)			4.1		6.8	6.9
tC, 2 stage (s)						
tF (s)			2.2		3.5	3.3
p0 queue free %			100		100	87
cM capacity (veh/h)			884		277	430

Direction, Lane #	EB 1	EB 2	WB 1	WB 2	NB 1
Volume Total	307	157	298	298	56
Volume Left	0	0	0	0	0
Volume Right	0	3	0	0	56
cSH	1700	1700	1700	1700	430
Volume to Capacity	0.18	0.09	0.18	0.18	0.13
Queue Length 95th (ft)	0	0	0	0	11
Control Delay (s)	0.0	0.0	0.0	0.0	14.6
Lane LOS					B
Approach Delay (s)	0.0		0.0		14.6
Approach LOS					B

Intersection Summary			
Average Delay	0.7		
Intersection Capacity Utilization	35.7%	ICU Level of Service	A
Analysis Period (min)	15		

Movement	EBL	EBT	EBR	WBL	WBT	WBR	NBL	NBT	NBR	SBL	SBT	SBR
Lane Configurations												
Ideal Flow (vphpl)	1900	1900	1900	1900	1900	1900	1900	1900	1900	1900	1900	1900
Total Lost time (s)	4.0	4.0		4.0	4.0		4.0	4.0		4.0	4.0	
Lane Util. Factor	1.00	0.95		1.00	0.95		1.00	0.95		1.00	0.95	
Frpb, ped/bikes	1.00	0.96		1.00	0.97		1.00	0.99		1.00	0.97	
Flpb, ped/bikes	0.93	1.00		0.92	1.00		1.00	1.00		1.00	1.00	
Frt	1.00	0.97		1.00	0.98		1.00	0.99		1.00	0.97	
Flt Protected	0.95	1.00		0.95	1.00		0.95	1.00		0.95	1.00	
Satd. Flow (prot)	1650	3317		1633	3367		1770	3464		1770	3334	
Flt Permitted	0.30	1.00		0.30	1.00		0.95	1.00		0.95	1.00	
Satd. Flow (perm)	520	3317		517	3367		1770	3464		1770	3334	
Volume (vph)	82	335	79	43	351	64	80	402	33	78	507	144
Peak-hour factor, PHF	0.90	0.90	0.90	0.90	0.90	0.90	0.90	0.90	0.90	0.90	0.90	0.90
Adj. Flow (vph)	91	372	88	48	390	71	89	447	37	87	563	160
RTOR Reduction (vph)	0	28	0	0	20	0	0	5	0	0	21	0
Lane Group Flow (vph)	91	432	0	48	441	0	89	479	0	87	702	0
Confl. Peds. (#/hr)	72		137	137		72			58	58		92
Turn Type	Perm			Perm			Prot			Prot		
Protected Phases		4			8		5	2		1	6	
Permitted Phases	4			8								
Actuated Green, G (s)	16.6	16.6		16.6	16.6		7.4	47.6		7.3	47.5	
Effective Green, g (s)	17.1	17.1		17.1	17.1		7.9	48.1		7.8	48.0	
Actuated g/C Ratio	0.20	0.20		0.20	0.20		0.09	0.57		0.09	0.56	
Clearance Time (s)	4.5	4.5		4.5	4.5		4.5	4.5		4.5	4.5	
Vehicle Extension (s)	2.0	2.0		2.0	2.0		2.0	2.0		2.0	2.0	
Lane Grp Cap (vph)	105	667		104	677		165	1960		162	1883	
v/s Ratio Prot		0.13			0.13		c0.05	0.14		0.05	c0.21	
v/s Ratio Perm	c0.17			0.09								
v/c Ratio	0.87	0.65		0.46	0.65		0.54	0.24		0.54	0.37	
Uniform Delay, d1	32.8	31.2		29.9	31.2		36.8	9.3		36.9	10.2	
Progression Factor	1.00	1.00		1.00	1.00		0.70	1.49		1.33	0.70	
Incremental Delay, d2	46.8	1.6		1.2	1.7		1.6	0.3		1.6	0.5	
Delay (s)	79.7	32.8		31.1	32.9		27.4	14.1		50.5	7.7	
Level of Service	E	C		C	C		C	B		D	A	
Approach Delay (s)		40.6			32.8			16.2			12.3	
Approach LOS		D			C			B			B	

Intersection Summary			
HCM Average Control Delay	23.8	HCM Level of Service	C
HCM Volume to Capacity ratio	0.51		
Actuated Cycle Length (s)	85.0	Sum of lost time (s)	12.0
Intersection Capacity Utilization	58.5%	ICU Level of Service	B
Analysis Period (min)	15		

c Critical Lane Group

Movement	EBL	EBR	NBL	NBT	SBT	SBR
Lane Configurations						
Sign Control	Stop			Free	Free	
Grade	0%			0%	0%	
Volume (veh/h)	5	16	41	544	585	27
Peak Hour Factor	0.90	0.90	0.90	0.90	0.90	0.90
Hourly flow rate (vph)	6	18	46	604	650	30
Pedestrians	100			100	100	
Lane Width (ft)	12.0			12.0	12.0	
Walking Speed (ft/s)	4.0			4.0	4.0	
Percent Blockage	8			8	8	
Right turn flare (veh)						
Median type	None					
Median storage veh)						
Upstream signal (ft)				396	625	
pX, platoon unblocked	0.97	0.97	0.97			
vC, conflicting volume	1258	540	780			
vC1, stage 1 conf vol						
vC2, stage 2 conf vol						
vCu, unblocked vol	1235	493	741			
tC, single (s)	6.8	6.9	4.1			
tC, 2 stage (s)						
tF (s)	3.5	3.3	2.2			
p0 queue free %	96	96	94			
cM capacity (veh/h)	129	425	765			

Direction, Lane #	EB 1	NB 1	NB 2	NB 3	SB 1	SB 2
Volume Total	23	46	302	302	433	247
Volume Left	6	46	0	0	0	0
Volume Right	18	0	0	0	0	30
cSH	275	765	1700	1700	1700	1700
Volume to Capacity	0.08	0.06	0.18	0.18	0.25	0.15
Queue Length 95th (ft)	7	5	0	0	0	0
Control Delay (s)	19.3	10.0	0.0	0.0	0.0	0.0
Lane LOS	C	B				
Approach Delay (s)	19.3	0.7			0.0	
Approach LOS	C					

Intersection Summary			
Average Delay	0.7		
Intersection Capacity Utilization	43.7%	ICU Level of Service	A
Analysis Period (min)	15		

Movement	WBL	WBR	NBT	NBR	SBL	SBT
Lane Configurations						
Sign Control	Stop		Free			Free
Grade	0%		0%			0%
Volume (veh/h)	11	34	551	9	15	583
Peak Hour Factor	0.90	0.90	0.90	0.90	0.90	0.90
Hourly flow rate (vph)	12	38	612	10	17	648
Pedestrians	34		33			34
Lane Width (ft)	12.0		12.0			12.0
Walking Speed (ft/s)	4.0		4.0			4.0
Percent Blockage	3		3			3
Right turn flare (veh)						
Median type	None					
Median storage veh)						
Upstream signal (ft)			230			791
pX, platoon unblocked	0.97	0.97			0.97	
vC, conflicting volume	1041	379			656	
vC1, stage 1 conf vol						
vC2, stage 2 conf vol						
vCu, unblocked vol	1015	335			620	
tC, single (s)	6.8	6.9			4.1	
tC, 2 stage (s)						
tF (s)	3.5	3.3			2.2	
p0 queue free %	94	94			98	
cM capacity (veh/h)	212	607			905	

Direction, Lane #	WB 1	NB 1	NB 2	SB 1	SB 2	SB 3
Volume Total	50	408	214	17	324	324
Volume Left	12	0	0	17	0	0
Volume Right	38	0	10	0	0	0
cSH	417	1700	1700	905	1700	1700
Volume to Capacity	0.12	0.24	0.13	0.02	0.19	0.19
Queue Length 95th (ft)	10	0	0	1	0	0
Control Delay (s)	14.8	0.0	0.0	9.1	0.0	0.0
Lane LOS	B			A		
Approach Delay (s)	14.8	0.0		0.2		
Approach LOS	B					

Intersection Summary			
Average Delay	0.7		
Intersection Capacity Utilization	33.4%	ICU Level of Service	A
Analysis Period (min)	15		

Movement	EBL	EBT	EBR	WBL	WBT	WBR	NBL	NBT	NBR	SBL	SBT	SBR
Lane Configurations												
Ideal Flow (vphpl)	1900	1900	1900	1900	1900	1900	1900	1900	1900	1900	1900	1900
Total Lost time (s)		4.0		4.0	4.0			4.0		4.0	4.0	
Lane Util. Factor		0.91		1.00	0.95			1.00		1.00	1.00	
Frpb, ped/bikes		1.00		1.00	1.00			0.99		1.00	1.00	
Flpb, ped/bikes		1.00		0.99	1.00			1.00		0.97	1.00	
Frt		0.99		1.00	0.97			0.98		1.00	0.99	
Flt Protected		0.99		0.95	1.00			0.99		0.95	1.00	
Satd. Flow (prot)		4983		1753	3416			1774		1724	1842	
Flt Permitted		0.88		0.53	1.00			0.88		0.44	1.00	
Satd. Flow (perm)		4407		985	3416			1586		807	1842	
Volume (vph)	34	263	25	50	262	66	58	171	49	64	185	12
Peak-hour factor, PHF	0.92	0.92	0.92	0.92	0.92	0.92	0.92	0.92	0.92	0.92	0.92	0.92
Adj. Flow (vph)	37	286	27	54	285	72	63	186	53	70	201	13
RTOR Reduction (vph)	0	10	0	0	26	0	0	9	0	0	3	0
Lane Group Flow (vph)	0	340	0	54	331	0	0	293	0	70	211	0
Confl. Peds. (#/hr)	24		18	18		24	24		48	48		24
Turn Type	Perm			Perm			Perm			Perm		
Protected Phases		4			8			2			6	
Permitted Phases	4			8			2			6		
Actuated Green, G (s)		51.0		51.0	51.0			24.0		24.0	24.0	
Effective Green, g (s)		52.0		52.0	52.0			25.0		25.0	25.0	
Actuated g/C Ratio		0.61		0.61	0.61			0.29		0.29	0.29	
Clearance Time (s)		5.0		5.0	5.0			5.0		5.0	5.0	
Lane Grp Cap (vph)		2696		603	2090			466		237	542	
v/s Ratio Prot					c0.10						0.11	
v/s Ratio Perm		0.08		0.05				c0.18		0.09		
v/c Ratio		0.13		0.09	0.16			0.63		0.30	0.39	
Uniform Delay, d1		6.9		6.8	7.1			26.0		23.2	23.9	
Progression Factor		1.00		1.00	1.00			1.00		1.00	1.00	
Incremental Delay, d2		0.1		0.3	0.2			6.3		3.2	2.1	
Delay (s)		7.0		7.1	7.3			32.3		26.3	26.0	
Level of Service		A		A	A			C		C	C	
Approach Delay (s)		7.0			7.2			32.3			26.1	
Approach LOS		A			A			C			C	

Intersection Summary			
HCM Average Control Delay	16.8	HCM Level of Service	B
HCM Volume to Capacity ratio	0.31		
Actuated Cycle Length (s)	85.0	Sum of lost time (s)	8.0
Intersection Capacity Utilization	92.5%	ICU Level of Service	F
Analysis Period (min)	15		
c Critical Lane Group			

Movement	EBL	EBT	EBR	WBL	WBT	WBR	NBL	NBT	NBR	SBL	SBT	SBR
Lane Configurations												
Ideal Flow (vphpl)	1900	1900	1900	1900	1900	1900	1900	1900	1900	1900	1900	1900
Total Lost time (s)		4.0			4.0		4.0	4.0		4.0	4.0	
Lane Util. Factor		0.91			0.91		1.00	1.00		1.00	1.00	
Frpb, ped/bikes		1.00			1.00		1.00	0.99		1.00	1.00	
Flpb, ped/bikes		1.00			1.00		0.99	1.00		0.99	1.00	
Frt		1.00			0.99		1.00	0.97		1.00	0.99	
Flt Protected		1.00			1.00		0.95	1.00		0.95	1.00	
Satd. Flow (prot)		5050			4990		1749	1785		1746	1834	
Flt Permitted		0.90			0.88		0.66	1.00		0.47	1.00	
Satd. Flow (perm)		4563			4418		1219	1785		858	1834	
Volume (vph)	25	367	7	33	323	32	30	166	50	23	105	10
Peak-hour factor, PHF	0.92	0.92	0.92	0.92	0.92	0.92	0.92	0.92	0.92	0.92	0.92	0.92
Adj. Flow (vph)	27	399	8	36	351	35	33	180	54	25	114	11
RTOR Reduction (vph)	0	2	0	0	12	0	0	13	0	0	4	0
Lane Group Flow (vph)	0	432	0	0	410	0	33	221	0	25	121	0
Confl. Peds. (#/hr)			18	18			12		18	18		12
Turn Type	Perm			Perm			Perm			Perm		
Protected Phases		4			8			2			6	
Permitted Phases	4			8			2			6		
Actuated Green, G (s)		50.0			50.0		19.0	19.0		19.0	19.0	
Effective Green, g (s)		51.5			51.5		20.5	20.5		20.5	20.5	
Actuated g/C Ratio		0.64			0.64		0.26	0.26		0.26	0.26	
Clearance Time (s)		5.5			5.5		5.5	5.5		5.5	5.5	
Lane Grp Cap (vph)		2937			2844		312	457		220	470	
v/s Ratio Prot								c0.12			0.07	
v/s Ratio Perm		c0.09			0.09		0.03			0.03		
v/c Ratio		0.15			0.14		0.11	0.48		0.11	0.26	
Uniform Delay, d1		5.6			5.6		22.7	25.3		22.8	23.7	
Progression Factor		1.00			0.78		1.00	1.00		1.02	1.01	
Incremental Delay, d2		0.1			0.1		0.7	3.6		1.0	1.3	
Delay (s)		5.7			4.5		23.4	28.9		24.2	25.2	
Level of Service		A			A		C	C		C	C	
Approach Delay (s)		5.7			4.5			28.2			25.0	
Approach LOS		A			A			C			C	

Intersection Summary			
HCM Average Control Delay	12.3	HCM Level of Service	B
HCM Volume to Capacity ratio	0.24		
Actuated Cycle Length (s)	80.0	Sum of lost time (s)	8.0
Intersection Capacity Utilization	50.1%	ICU Level of Service	A
Analysis Period (min)	15		
c Critical Lane Group			

Movement	EBL	EBT	EBR	WBL	WBT	WBR	NBL	NBT	NBR	SBL	SBT	SBR
Lane Configurations												
Ideal Flow (vphpl)	1900	1900	1900	1900	1900	1900	1900	1900	1900	1900	1900	1900
Total Lost time (s)		4.0			4.0			4.0			4.0	
Lane Util. Factor		0.91			0.91			0.95			0.95	
Frpb, ped/bikes		1.00			0.99			1.00			1.00	
Flpb, ped/bikes		1.00			1.00			1.00			1.00	
Frt		0.99			0.96			0.98			0.99	
Flt Protected		1.00			1.00			1.00			0.99	
Satd. Flow (prot)		5002			4827			3442			3464	
Flt Permitted		0.85			0.87			0.92			0.85	
Satd. Flow (perm)		4253			4193			3175			2966	
Volume (vph)	43	378	28	48	369	156	15	154	25	53	198	13
Peak-hour factor, PHF	0.92	0.92	0.92	0.92	0.92	0.92	0.92	0.92	0.92	0.92	0.92	0.92
Adj. Flow (vph)	47	411	30	52	401	170	16	167	27	58	215	14
RTOR Reduction (vph)	0	9	0	0	61	0	0	14	0	0	4	0
Lane Group Flow (vph)	0	479	0	0	562	0	0	196	0	0	283	0
Confl. Peds. (#/hr)	17		19	19		17	12		16	16		12
Turn Type	Perm			Perm			Perm			Perm		
Protected Phases		4			8			2			6	
Permitted Phases	4			8			2			6		
Actuated Green, G (s)		50.0			50.0			19.0			19.0	
Effective Green, g (s)		51.5			51.5			20.5			20.5	
Actuated g/C Ratio		0.64			0.64			0.26			0.26	
Clearance Time (s)		5.5			5.5			5.5			5.5	
Lane Grp Cap (vph)		2738			2699			814			760	
v/s Ratio Prot												
v/s Ratio Perm		0.11			c0.13			0.06			c0.10	
v/c Ratio		0.17			0.21			0.24			0.37	
Uniform Delay, d1		5.7			5.9			23.6			24.5	
Progression Factor		0.80			1.00			1.00			0.41	
Incremental Delay, d2		0.1			0.2			0.7			1.4	
Delay (s)		4.7			6.0			24.3			11.3	
Level of Service		A			A			C			B	
Approach Delay (s)		4.7			6.0			24.3			11.3	
Approach LOS		A			A			C			B	

Intersection Summary			
HCM Average Control Delay	9.0	HCM Level of Service	A
HCM Volume to Capacity ratio	0.25		
Actuated Cycle Length (s)	80.0	Sum of lost time (s)	8.0
Intersection Capacity Utilization	84.4%	ICU Level of Service	E
Analysis Period (min)	15		
c Critical Lane Group			

Movement	EBL	EBT	WBT	WBR	SBL	SBR
Lane Configurations						
Sign Control		Free	Free		Stop	
Grade		0%	0%		0%	
Volume (veh/h)	0	469	414	32	0	153
Peak Hour Factor	0.90	0.90	0.90	0.90	0.90	0.90
Hourly flow rate (vph)	0	521	460	36	0	170
Pedestrians		98			98	
Lane Width (ft)		12.0			12.0	
Walking Speed (ft/s)		4.0			4.0	
Percent Blockage		8			8	
Right turn flare (veh)						
Median type					None	
Median storage veh)						
Upstream signal (ft)		698	473			
pX, platoon unblocked						
vC, conflicting volume	594				732	349
vC1, stage 1 conf vol						
vC2, stage 2 conf vol						
vCu, unblocked vol	594				732	349
tC, single (s)	4.1				6.8	6.9
tC, 2 stage (s)						
tF (s)	2.2				3.5	3.3
p0 queue free %	100				100	69
cM capacity (veh/h)	899				327	545

Direction, Lane #	EB 1	EB 2	EB 3	WB 1	WB 2	WB 3	WB 4	SB 1
Volume Total	174	174	174	153	153	153	36	170
Volume Left	0	0	0	0	0	0	0	0
Volume Right	0	0	0	0	0	0	36	170
cSH	1700	1700	1700	1700	1700	1700	1700	545
Volume to Capacity	0.10	0.10	0.10	0.09	0.09	0.09	0.02	0.31
Queue Length 95th (ft)	0	0	0	0	0	0	0	33
Control Delay (s)	0.0	0.0	0.0	0.0	0.0	0.0	0.0	14.6
Lane LOS								B
Approach Delay (s)	0.0			0.0				14.6
Approach LOS								B

Intersection Summary			
Average Delay	2.1		
Intersection Capacity Utilization	35.2%	ICU Level of Service	A
Analysis Period (min)	15		

Movement	EBL	EBT	EBR	WBL	WBT	WBR	NBL	NBT	NBR	SBL	SBT	SBR
Lane Configurations												
Ideal Flow (vphpl)	1900	1900	1900	1900	1900	1900	1900	1900	1900	1900	1900	1900
Total Lost time (s)		4.0			4.0		4.0	4.0		4.0	4.0	
Lane Util. Factor		0.91			0.91		1.00	0.95		1.00	0.95	
Frpb, ped/bikes		1.00			0.99		1.00	1.00		1.00	1.00	
Flpb, ped/bikes		1.00			1.00		0.99	1.00		0.98	1.00	
Frt		0.98			0.96		1.00	0.98		1.00	0.99	
Flt Protected		0.99			0.99		0.95	1.00		0.95	1.00	
Satd. Flow (prot)		4894			4802		1749	3470		1738	3478	
Flt Permitted		0.72			0.76		0.44	1.00		0.51	1.00	
Satd. Flow (perm)		3547			3657		804	3470		931	3478	
Volume (vph)	73	324	77	79	365	143	40	343	39	101	456	47
Peak-hour factor, PHF	0.92	0.92	0.92	0.92	0.92	0.92	0.92	0.92	0.92	0.92	0.92	0.92
Adj. Flow (vph)	79	352	84	86	397	155	43	373	42	110	496	51
RTOR Reduction (vph)	0	50	0	0	118	0	0	5	0	0	4	0
Lane Group Flow (vph)	0	465	0	0	520	0	43	410	0	110	543	0
Confl. Peds. (#/hr)	40		9			40	25		31	31		25
Turn Type	Perm			Prot			Perm			Perm		
Protected Phases		4		3	8			2			6	
Permitted Phases	4						2			6		
Actuated Green, G (s)		18.7			18.7		55.8	55.8		55.8	55.8	
Effective Green, g (s)		20.2			20.2		56.8	56.8		56.8	56.8	
Actuated g/C Ratio		0.24			0.24		0.67	0.67		0.67	0.67	
Clearance Time (s)		5.5			5.5		5.0	5.0		5.0	5.0	
Vehicle Extension (s)		2.0			2.0		2.0	2.0		2.0	2.0	
Lane Grp Cap (vph)		843			869		537	2319		622	2324	
v/s Ratio Prot								0.12			c0.16	
v/s Ratio Perm		0.13			c0.14		0.05			0.12		
v/c Ratio		0.55			1.00dr		0.08	0.18		0.18	0.23	
Uniform Delay, d1		28.4			28.8		4.9	5.3		5.3	5.5	
Progression Factor		1.00			1.00		1.24	1.23		1.55	1.60	
Incremental Delay, d2		0.4			0.7		0.3	0.2		0.6	0.2	
Delay (s)		28.9			29.5		6.4	6.7		8.8	9.1	
Level of Service		C			C		A	A		A	A	
Approach Delay (s)		28.9			29.5			6.6			9.0	
Approach LOS		C			C			A			A	

Intersection Summary			
HCM Average Control Delay	18.8	HCM Level of Service	B
HCM Volume to Capacity ratio	0.33		
Actuated Cycle Length (s)	85.0	Sum of lost time (s)	8.0
Intersection Capacity Utilization	69.3%	ICU Level of Service	C
Analysis Period (min)	15		

dr Defacto Right Lane. Recode with 1 though lane as a right lane.
c Critical Lane Group

Movement	EBL	EBT	EBR	WBL	WBT	WBR	NBL	NBT	NBR	SBL	SBT	SBR
Lane Configurations												
Ideal Flow (vphpl)	1900	1900	1900	1900	1900	1900	1900	1900	1900	1900	1900	1900
Total Lost time (s)		4.0			4.0			4.0	4.0		4.0	
Lane Util. Factor		0.91			0.91			1.00	1.00		1.00	
Frpb, ped/bikes		1.00			0.99			1.00	0.88		0.95	
Flpb, ped/bikes		1.00			1.00			0.92	1.00		0.94	
Frt		1.00			0.98			1.00	0.85		0.94	
Flt Protected		1.00			1.00			0.96	1.00		0.97	
Satd. Flow (prot)		5048			4927			1631	1395		1523	
Flt Permitted		0.89			0.91			0.83	1.00		0.86	
Satd. Flow (perm)		4497			4495			1420	1395		1349	
Volume (vph)	25	460	6	24	565	75	12	1	13	47	1	41
Peak-hour factor, PHF	0.91	0.91	0.91	0.91	0.91	0.91	0.91	0.91	0.91	0.91	0.91	0.91
Adj. Flow (vph)	27	505	7	26	621	82	13	1	14	52	1	45
RTOR Reduction (vph)	0	2	0	0	20	0	0	0	10	0	32	0
Lane Group Flow (vph)	0	537	0	0	709	0	0	14	4	0	66	0
Confl. Peds. (#/hr)	100		100	100		100	100		100	100		100
Turn Type	Perm			Perm			Perm		Perm	Perm		
Protected Phases		4			8			2			6	
Permitted Phases	4			8			2		2	6		
Actuated Green, G (s)		48.0			48.0			23.0	23.0		23.0	
Effective Green, g (s)		48.5			48.5			23.5	23.5		23.5	
Actuated g/C Ratio		0.61			0.61			0.29	0.29		0.29	
Clearance Time (s)		4.5			4.5			4.5	4.5		4.5	
Lane Grp Cap (vph)		2726			2725			417	410		396	
v/s Ratio Prot												
v/s Ratio Perm		0.12			c0.16			0.01	0.00		c0.05	
v/c Ratio		0.20			0.26			0.03	0.01		0.17	
Uniform Delay, d1		7.0			7.4			20.2	20.0		21.0	
Progression Factor		1.00			1.00			1.00	1.00		1.00	
Incremental Delay, d2		0.2			0.2			0.1	0.0		0.9	
Delay (s)		7.2			7.6			20.3	20.1		21.9	
Level of Service		A			A			C	C		C	
Approach Delay (s)		7.2			7.6			20.2			21.9	
Approach LOS		A			A			C			C	

Intersection Summary			
HCM Average Control Delay	8.7	HCM Level of Service	A
HCM Volume to Capacity ratio	0.23		
Actuated Cycle Length (s)	80.0	Sum of lost time (s)	8.0
Intersection Capacity Utilization	81.7%	ICU Level of Service	D
Analysis Period (min)	15		

c Critical Lane Group

Movement	EBL	EBT	EBR	WBL	WBT	WBR	NBL	NBT	NBR	SBL	SBT	SBR
Lane Configurations												
Ideal Flow (vphpl)	1900	1900	1900	1900	1900	1900	1900	1900	1900	1900	1900	1900
Total Lost time (s)	4.0	4.0		4.0	4.0		4.0	4.0		4.0	4.0	
Lane Util. Factor	1.00	0.91		1.00	0.91		1.00	0.91		1.00	0.91	
Frpb, ped/bikes	1.00	0.99		1.00	0.99		1.00	0.99		1.00	1.00	
Flpb, ped/bikes	1.00	1.00		1.00	1.00		1.00	1.00		1.00	1.00	
Frt	1.00	0.98		1.00	0.94		1.00	0.98		1.00	0.98	
Flt Protected	0.95	1.00		0.95	1.00		0.95	1.00		0.95	1.00	
Satd. Flow (prot)	1770	4943		1770	4735		1770	4943		1770	4981	
Flt Permitted	0.95	1.00		0.95	1.00		0.95	1.00		0.95	1.00	
Satd. Flow (perm)	1770	4943		1770	4735		1770	4943		1770	4981	
Volume (vph)	70	403	54	112	432	253	89	259	42	226	521	64
Peak-hour factor, PHF	0.90	0.90	0.90	0.90	0.90	0.90	0.90	0.90	0.90	0.90	0.90	0.90
Adj. Flow (vph)	78	448	60	124	480	281	99	288	47	251	579	71
RTOR Reduction (vph)	0	18	0	0	111	0	0	25	0	0	17	0
Lane Group Flow (vph)	78	490	0	124	650	0	99	311	0	251	633	0
Confl. Peds. (#/hr)			66			23			38			26
Turn Type	Prot			Prot			Prot			Prot		
Protected Phases	3	4		3	4		1	2		1	2	
Permitted Phases												
Actuated Green, G (s)	10.5	26.5		10.5	26.5		9.0	26.0		9.0	26.0	
Effective Green, g (s)	10.5	27.5		10.5	27.5		9.0	27.0		9.0	27.0	
Actuated g/C Ratio	0.12	0.31		0.12	0.31		0.10	0.30		0.10	0.30	
Clearance Time (s)	4.0	5.0		4.0	5.0		4.0	5.0		4.0	5.0	
Vehicle Extension (s)	2.0	2.0		2.0	2.0		2.0	2.0		2.0	2.0	
Lane Grp Cap (vph)	207	1510		207	1447		177	1483		177	1494	
v/s Ratio Prot	0.04	0.10		c0.07	c0.14		0.06	0.06		c0.14	c0.13	
v/s Ratio Perm												
v/c Ratio	0.38	0.32		0.60	0.45		0.56	0.21		1.42	0.42	
Uniform Delay, d1	36.7	24.1		37.8	25.2		38.6	23.5		40.5	25.3	
Progression Factor	1.00	1.00		0.97	2.02		1.00	1.00		1.00	1.00	
Incremental Delay, d2	0.4	0.6		2.4	0.8		2.2	0.3		217.9	0.9	
Delay (s)	37.1	24.7		39.2	51.5		40.8	23.8		258.4	26.1	
Level of Service	D	C		D	D		D	C		F	C	
Approach Delay (s)		26.3			49.8			27.7			90.9	
Approach LOS		C			D			C			F	

Intersection Summary			
HCM Average Control Delay	54.7	HCM Level of Service	D
HCM Volume to Capacity ratio	0.58		
Actuated Cycle Length (s)	90.0	Sum of lost time (s)	16.0
Intersection Capacity Utilization	72.9%	ICU Level of Service	C
Analysis Period (min)	15		

c Critical Lane Group

Movement	EBL	EBT	EBR	WBL	WBT	WBR	NBL	NBT	NBR	SBL	SBT	SBR
Lane Configurations												
Ideal Flow (vphpl)	1900	1900	1900	1900	1900	1900	1900	1900	1900	1900	1900	1900
Total Lost time (s)		4.0			4.0		4.0	4.0		4.0	4.0	
Lane Util. Factor		1.00			1.00		1.00	0.95		1.00	0.95	
Frpb, ped/bikes		0.93			0.95		1.00	0.99		1.00	0.98	
Flpb, ped/bikes		0.97			0.96		0.91	1.00		0.92	1.00	
Frt		0.95			0.95		1.00	0.99		1.00	0.99	
Flt Protected		0.98			0.99		0.95	1.00		0.95	1.00	
Satd. Flow (prot)		1568			1599		1602	3484		1631	3432	
Flt Permitted		0.76			0.90		0.51	1.00		0.44	1.00	
Satd. Flow (perm)		1205			1455		853	3484		762	3432	
Volume (vph)	25	19	26	25	34	38	54	488	24	22	352	35
Peak-hour factor, PHF	0.92	0.92	0.92	0.92	0.92	0.92	0.92	0.92	0.92	0.92	0.92	0.92
Adj. Flow (vph)	27	21	28	27	37	41	59	530	26	24	383	38
RTOR Reduction (vph)	0	26	0	0	35	0	0	2	0	0	4	0
Lane Group Flow (vph)	0	50	0	0	70	0	59	554	0	24	417	0
Confl. Peds. (#/hr)	100		100	100		100	100		100	100		100
Turn Type	Perm			Perm			Perm			Perm		
Protected Phases		4			4			2			6	
Permitted Phases	4			4			2			6		
Actuated Green, G (s)		7.2			7.2		70.8	70.8		70.8	70.8	
Effective Green, g (s)		6.7			6.7		70.3	70.3		70.3	70.3	
Actuated g/C Ratio		0.08			0.08		0.83	0.83		0.83	0.83	
Clearance Time (s)		3.5			3.5		3.5	3.5		3.5	3.5	
Vehicle Extension (s)		2.0			2.0		2.0	2.0		2.0	2.0	
Lane Grp Cap (vph)		95			115		705	2881		630	2838	
v/s Ratio Prot								c0.16			0.12	
v/s Ratio Perm		0.04			c0.05		0.07			0.03		
v/c Ratio		0.53			0.61		0.08	0.19		0.04	0.15	
Uniform Delay, d1		37.6			37.9		1.4	1.5		1.3	1.4	
Progression Factor		1.00			1.00		0.45	0.43		0.40	0.37	
Incremental Delay, d2		2.4			6.1		0.2	0.1		0.1	0.1	
Delay (s)		40.1			44.0		0.8	0.8		0.6	0.6	
Level of Service		D			D		A	A		A	A	
Approach Delay (s)		40.1			44.0			0.8			0.6	
Approach LOS		D			D			A			A	

Intersection Summary			
HCM Average Control Delay	6.8	HCM Level of Service	A
HCM Volume to Capacity ratio	0.23		
Actuated Cycle Length (s)	85.0	Sum of lost time (s)	8.0
Intersection Capacity Utilization	54.6%	ICU Level of Service	A
Analysis Period (min)	15		

c Critical Lane Group

Movement	EBL	EBT	EBR	WBL	WBT	WBR	NBL	NBT	NBR	SBL	SBT	SBR
Lane Configurations												
Ideal Flow (vphpl)	1900	1900	1900	1900	1900	1900	1900	1900	1900	1900	1900	1900
Total Lost time (s)	4.0	4.0		4.0	4.0		4.0	4.0		4.0	4.0	
Lane Util. Factor	1.00	0.95		1.00	0.95		1.00	0.95		1.00	0.95	
Frpb, ped/bikes	1.00	0.97		1.00	0.94		1.00	0.99		1.00	0.95	
Flpb, ped/bikes	1.00	1.00		1.00	1.00		0.93	1.00		0.95	1.00	
Frt	1.00	0.97		1.00	0.96		1.00	0.99		1.00	0.95	
Flt Protected	0.95	1.00		0.95	1.00		0.95	1.00		0.95	1.00	
Satd. Flow (prot)	1770	3330		1770	3213		1642	3461		1673	3195	
Flt Permitted	0.95	1.00		0.95	1.00		0.42	1.00		0.51	1.00	
Satd. Flow (perm)	1770	3330		1770	3213		732	3461		897	3195	
Volume (vph)	255	350	97	50	270	96	58	311	30	35	318	141
Peak-hour factor, PHF	0.90	0.90	0.90	0.90	0.90	0.90	0.90	0.90	0.90	0.90	0.90	0.90
Adj. Flow (vph)	283	389	108	56	300	107	64	346	33	39	353	157
RTOR Reduction (vph)	0	28	0	0	47	0	0	7	0	0	48	0
Lane Group Flow (vph)	283	469	0	56	360	0	64	372	0	39	462	0
Confl. Peds. (#/hr)			100			100	100		100	100		100
Turn Type	Prot			Prot			Perm			Perm		
Protected Phases	7	4		3	8			2			6	
Permitted Phases							2			6		
Actuated Green, G (s)	16.5	26.6		4.9	15.0		40.0	40.0		40.0	40.0	
Effective Green, g (s)	17.0	26.1		5.4	14.5		41.5	41.5		41.5	41.5	
Actuated g/C Ratio	0.20	0.31		0.06	0.17		0.49	0.49		0.49	0.49	
Clearance Time (s)	4.5	3.5		4.5	3.5		5.5	5.5		5.5	5.5	
Vehicle Extension (s)	2.0	2.0		2.0	2.0		2.0	2.0		2.0	2.0	
Lane Grp Cap (vph)	354	1023		112	548		357	1690		438	1560	
v/s Ratio Prot	c0.16	0.14		0.03	c0.11			0.11			c0.14	
v/s Ratio Perm							0.09			0.04		
v/c Ratio	0.80	0.46		0.50	0.66		0.18	0.22		0.09	0.30	
Uniform Delay, d1	32.4	23.8		38.5	32.9		12.2	12.5		11.6	13.0	
Progression Factor	1.00	1.00		1.00	1.00		1.00	1.00		0.70	0.72	
Incremental Delay, d2	11.2	0.1		1.3	2.2		1.1	0.3		0.4	0.5	
Delay (s)	43.6	23.9		39.8	35.1		13.3	12.8		8.5	9.8	
Level of Service	D	C		D	D		B	B		A	A	
Approach Delay (s)		31.0			35.7			12.8			9.7	
Approach LOS		C			D			B			A	

Intersection Summary			
HCM Average Control Delay	23.1	HCM Level of Service	C
HCM Volume to Capacity ratio	0.48		
Actuated Cycle Length (s)	85.0	Sum of lost time (s)	12.0
Intersection Capacity Utilization	72.2%	ICU Level of Service	C
Analysis Period (min)	15		

c Critical Lane Group

Movement	EBL	EBT	EBR	WBL	WBT	WBR	NBL	NBT	NBR	SBL	SBT	SBR
Lane Configurations												
Ideal Flow (vphpl)	1900	1900	1900	1900	1900	1900	1900	1900	1900	1900	1900	1900
Lane Width	12	12	12	12	12	12	16	16	16	16	16	16
Total Lost time (s)	4.0	4.0		4.0	4.0			2.0			2.0	
Lane Util. Factor	1.00	0.91		1.00	0.91			1.00			1.00	
Frpb, ped/bikes	1.00	0.99		1.00	1.00			0.99			0.99	
Flpb, ped/bikes	1.00	1.00		0.99	1.00			1.00			1.00	
Frt	1.00	0.98		1.00	0.98			0.98			0.95	
Flt Protected	0.95	1.00		0.95	1.00			0.98			0.99	
Satd. Flow (prot)	1770	4938		1751	4971			2007			1943	
Flt Permitted	0.95	1.00		0.29	1.00			0.57			0.80	
Satd. Flow (perm)	1770	4938		527	4971			1254			1579	
Volume (vph)	322	1226	163	80	958	138	165	225	79	133	256	259
Peak-hour factor, PHF	0.95	0.95	0.95	0.95	0.95	0.95	0.95	0.95	0.95	0.95	0.95	0.95
Adj. Flow (vph)	339	1291	172	84	1008	145	174	237	83	140	269	273
RTOR Reduction (vph)	0	24	0	0	27	0	0	10	0	0	52	0
Lane Group Flow (vph)	339	1439	0	84	1126	0	0	484	0	0	630	0
Confl. Peds. (#/hr)			32	32		4	12		24	24		12
Parking (#/hr)												0
Turn Type	Prot			Perm			Perm			Perm		
Protected Phases	7	4			8			2			6	
Permitted Phases				8			2			6		
Actuated Green, G (s)	18.0	36.0		14.0	14.0			27.5			27.5	
Effective Green, g (s)	18.0	36.0		14.0	14.0			28.0			28.0	
Actuated g/C Ratio	0.26	0.51		0.20	0.20			0.40			0.40	
Clearance Time (s)	4.0	4.0		4.0	4.0			2.5			2.5	
Lane Grp Cap (vph)	455	2540		105	994			502			632	
v/s Ratio Prot	c0.19	0.29			c0.23							
v/s Ratio Perm				0.16				0.39			c0.40	
v/c Ratio	0.75	0.57		0.80	1.13			0.96			1.00	
Uniform Delay, d1	23.9	11.7		26.7	28.0			20.5			21.0	
Progression Factor	1.00	1.00		1.00	1.00			1.00			1.00	
Incremental Delay, d2	10.6	0.9		45.5	72.4			32.4			35.2	
Delay (s)	34.5	12.6		72.2	100.4			52.9			56.2	
Level of Service	C	B		E	F			D			E	
Approach Delay (s)		16.7			98.5			52.9			56.2	
Approach LOS		B			F			D			E	

Intersection Summary			
HCM Average Control Delay	51.3	HCM Level of Service	D
HCM Volume to Capacity ratio	0.95		
Actuated Cycle Length (s)	70.0	Sum of lost time (s)	10.0
Intersection Capacity Utilization	93.5%	ICU Level of Service	F
Analysis Period (min)	15		
c Critical Lane Group			

Movement	EBL	EBT	EBR	WBL	WBT	WBR	NBL	NBT	NBR	SBL	SBT	SBR
Lane Configurations												
Ideal Flow (vphpl)	1900	1900	1900	1900	1900	1900	1900	1900	1900	1900	1900	1900
Total Lost time (s)		4.0		4.0	4.0			4.0		4.0	4.0	
Lane Util. Factor		1.00		0.95	0.95			0.95		1.00	0.95	
Frpb, ped/bikes		1.00		1.00	0.97			0.99		1.00	0.95	
Flpb, ped/bikes		0.99		1.00	1.00			1.00		1.00	1.00	
Frt		0.92		1.00	0.92			0.97		1.00	0.95	
Flt Protected		0.98		0.95	1.00			1.00		0.95	1.00	
Satd. Flow (prot)		1670		1681	1573			3373		1770	3190	
Flt Permitted		0.48		0.73	1.00			0.94		0.95	1.00	
Satd. Flow (perm)		814		1296	1573			3176		1770	3190	
Volume (vph)	12	3	21	98	102	118	10	984	279	98	784	398
Peak-hour factor, PHF	0.95	0.95	0.95	0.95	0.95	0.95	0.95	0.95	0.95	0.95	0.95	0.95
Adj. Flow (vph)	13	3	22	103	107	124	11	1036	294	103	825	419
RTOR Reduction (vph)	0	21	0	0	45	0	0	19	0	0	49	0
Lane Group Flow (vph)	0	17	0	103	186	0	0	1322	0	103	1195	0
Confl. Peds. (#/hr)	36					36	48		16	16		48
Turn Type	Perm			Perm			Perm			Prot		
Protected Phases		7			8			2		1	6	
Permitted Phases	7			8			2					
Actuated Green, G (s)		5.1		15.4	15.4			52.8		8.7	66.0	
Effective Green, g (s)		5.6		15.9	15.9			53.3		9.2	66.5	
Actuated g/C Ratio		0.06		0.16	0.16			0.53		0.09	0.66	
Clearance Time (s)		4.5		4.5	4.5			4.5		4.5	4.5	
Vehicle Extension (s)		2.0		2.0	2.0			2.0		2.0	2.0	
Lane Grp Cap (vph)		46		206	250			1693		163	2121	
v/s Ratio Prot										0.06	c0.37	
v/s Ratio Perm		c0.02		0.08	0.12			c0.42				
v/c Ratio		0.37		0.50	0.74			0.78		0.63	0.56	
Uniform Delay, d1		45.5		38.4	40.1			18.7		43.8	9.0	
Progression Factor		1.00		1.00	1.00			0.79		1.00	1.00	
Incremental Delay, d2		1.9		0.7	9.9			2.0		5.8	1.1	
Delay (s)		47.4		39.1	50.0			16.9		49.5	10.1	
Level of Service		D		D	D			B		D	B	
Approach Delay (s)		47.4			46.7			16.9			13.1	
Approach LOS		D			D			B			B	

Intersection Summary			
HCM Average Control Delay	18.8	HCM Level of Service	B
HCM Volume to Capacity ratio	0.73		
Actuated Cycle Length (s)	100.0	Sum of lost time (s)	16.0
Intersection Capacity Utilization	98.5%	ICU Level of Service	F
Analysis Period (min)	15		
c Critical Lane Group			

Movement	EBL	EBT	EBR	WBL	WBT	WBR	NBL	NBT	NBR	SBL	SBT	SBR
Lane Configurations												
Ideal Flow (vphpl)	1900	1900	1900	1900	1900	1900	1900	1900	1900	1900	1900	1900
Total Lost time (s)	4.0	4.0		4.0	4.0		4.0	4.0		4.0	4.0	
Lane Util. Factor	0.97	0.95		1.00	0.95		1.00	0.95		1.00	0.95	
Frpb, ped/bikes	1.00	0.99		1.00	0.99		1.00	0.99		1.00	0.98	
Flpb, ped/bikes	1.00	1.00		1.00	1.00		1.00	1.00		1.00	1.00	
Frt	1.00	0.99		1.00	0.95		1.00	0.97		1.00	0.99	
Flt Protected	0.95	1.00		0.95	1.00		0.95	1.00		0.95	1.00	
Satd. Flow (prot)	3433	3463		1770	3340		1770	3395		1770	3416	
Flt Permitted	0.95	1.00		0.95	1.00		0.95	1.00		0.95	1.00	
Satd. Flow (perm)	3433	3463		1770	3340		1770	3395		1770	3416	
Volume (vph)	508	822	69	93	468	212	69	575	127	203	654	56
Peak-hour factor, PHF	0.95	0.95	0.95	0.95	0.95	0.95	0.95	0.95	0.95	0.95	0.95	0.95
Adj. Flow (vph)	535	865	73	98	493	223	73	605	134	214	688	59
RTOR Reduction (vph)	0	6	0	0	52	0	0	19	0	0	7	0
Lane Group Flow (vph)	535	932	0	98	664	0	73	720	0	214	740	0
Confl. Peds. (#/hr)	15		48	48		15	123		48	48		123
Turn Type	Prot			Prot			Prot			Prot		
Protected Phases	7	4		3	8		5	2		1	6	
Permitted Phases												
Actuated Green, G (s)	16.0	30.2		8.0	22.2		5.0	32.8		12.0	39.8	
Effective Green, g (s)	15.5	31.2		7.5	23.2		4.5	33.8		11.5	40.8	
Actuated g/C Ratio	0.16	0.31		0.08	0.23		0.04	0.34		0.12	0.41	
Clearance Time (s)	3.5	5.0		3.5	5.0		3.5	5.0		3.5	5.0	
Vehicle Extension (s)	2.0	2.0		2.0	2.0		2.0	2.0		2.0	2.0	
Lane Grp Cap (vph)	532	1080		133	775		80	1148		204	1394	
v/s Ratio Prot	c0.16	c0.27		0.06	0.20		0.04	c0.21		c0.12	0.22	
v/s Ratio Perm												
v/c Ratio	1.01	0.86		0.74	0.86		0.91	0.63		1.05	0.53	
Uniform Delay, d1	42.2	32.4		45.3	36.8		47.6	27.8		44.2	22.4	
Progression Factor	1.00	1.00		1.00	1.00		1.00	1.00		1.18	0.77	
Incremental Delay, d2	40.4	7.0		16.6	8.9		70.5	2.6		71.4	1.2	
Delay (s)	82.7	39.4		61.9	45.7		118.0	30.4		123.5	18.5	
Level of Service	F	D		E	D		F	C		F	B	
Approach Delay (s)		55.1			47.6			38.3			41.9	
Approach LOS		E			D			D			D	

Intersection Summary			
HCM Average Control Delay	47.1	HCM Level of Service	D
HCM Volume to Capacity ratio	0.81		
Actuated Cycle Length (s)	100.0	Sum of lost time (s)	12.0
Intersection Capacity Utilization	79.9%	ICU Level of Service	D
Analysis Period (min)	15		

c Critical Lane Group

Movement	EBL	EBT	EBR	WBL	WBT	WBR	NBL	NBT	NBR	SBL	SBT	SBR
Lane Configurations												
Ideal Flow (vphpl)	1900	1900	1900	1900	1900	1900	1900	1900	1900	1900	1900	1900
Total Lost time (s)		4.0						4.0		4.0	4.0	
Lane Util. Factor		1.00						0.95		0.97	0.95	
Frt		0.86						0.93		1.00	0.97	
Flt Protected		1.00						1.00		0.95	1.00	
Satd. Flow (prot)		1611						3295		3433	3440	
Flt Permitted		1.00						0.95		0.95	1.00	
Satd. Flow (perm)		1611						3118		3433	3440	
Volume (vph)	0	0	6	0	0	0	10	280	241	1430	281	64
Peak-hour factor, PHF	0.92	0.92	0.92	0.92	0.92	0.92	0.92	0.92	0.92	0.92	0.92	0.92
Adj. Flow (vph)	0	0	7	0	0	0	11	304	262	1554	305	70
RTOR Reduction (vph)	0	7	0	0	0	0	0	21	0	0	0	0
Lane Group Flow (vph)	0	0	0	0	0	0	0	556	0	1554	375	0
Turn Type							Perm			Prot		
Protected Phases								2		1	6	
Permitted Phases							2					
Actuated Green, G (s)		0.0						13.0		29.0	50.0	
Effective Green, g (s)		0.0						13.0		29.0	50.0	
Actuated g/C Ratio		0.00						0.26		0.58	1.00	
Clearance Time (s)								4.0		4.0	2.0	
Lane Grp Cap (vph)		0						811		1991	3440	
v/s Ratio Prot										c0.45	0.11	
v/s Ratio Perm								c0.18				
v/c Ratio		0.00						0.69		0.78	0.11	
Uniform Delay, d1		25.0						16.7		8.1	0.0	
Progression Factor		1.00						0.77		1.00	1.00	
Incremental Delay, d2		0.0						4.5		3.1	0.1	
Delay (s)		25.0						17.3		11.2	0.1	
Level of Service		C						B		B	A	
Approach Delay (s)		25.0			0.0			17.3			9.0	
Approach LOS		C			A			B			A	

Intersection Summary			
HCM Average Control Delay	11.0	HCM Level of Service	B
HCM Volume to Capacity ratio	0.75		
Actuated Cycle Length (s)	50.0	Sum of lost time (s)	8.0
Intersection Capacity Utilization	69.9%	ICU Level of Service	C
Analysis Period (min)	15		

c Critical Lane Group

Movement	EBL	EBT	EBR	WBL	WBT	WBR	NBL	NBT	NBR	SBL	SBT	SBR
Lane Configurations												
Ideal Flow (vphpl)	1900	1900	1900	1900	1900	1900	1900	1900	1900	1900	1900	1900
Total Lost time (s)		4.0			4.0			4.0			4.0	
Lane Util. Factor		1.00			1.00			0.95			0.95	
Frpb, ped/bikes		0.96			0.97			0.98			0.99	
Flpb, ped/bikes		0.98			0.96			1.00			0.99	
Frt		0.96			0.96			0.98			0.99	
Flt Protected		0.98			0.99			1.00			0.99	
Satd. Flow (prot)		1647			1649			3398			3436	
Flt Permitted		0.88			0.91			0.94			0.86	
Satd. Flow (perm)		1473			1519			3197			2962	
Volume (vph)	26	27	20	48	72	50	17	399	66	43	257	20
Peak-hour factor, PHF	0.90	0.90	0.90	0.90	0.90	0.90	0.90	0.90	0.90	0.90	0.90	0.90
Adj. Flow (vph)	29	30	22	53	80	56	19	443	73	48	286	22
RTOR Reduction (vph)	0	15	0	0	30	0	0	25	0	0	10	0
Lane Group Flow (vph)	0	66	0	0	159	0	0	510	0	0	347	0
Confl. Peds. (#/hr)	100		100	100		100	100		100	100		100
Turn Type	Perm			Perm			Perm			Perm		
Protected Phases		4			8			2			6	
Permitted Phases	4			8			2			6		
Actuated Green, G (s)		17.0			17.0			25.0			25.0	
Effective Green, g (s)		17.0			17.0			25.0			25.0	
Actuated g/C Ratio		0.34			0.34			0.50			0.50	
Clearance Time (s)		4.0			4.0			4.0			4.0	
Lane Grp Cap (vph)		501			516			1599			1481	
v/s Ratio Prot												
v/s Ratio Perm		0.05			c0.10			c0.16			0.12	
v/c Ratio		0.13			0.31			0.32			0.23	
Uniform Delay, d1		11.4			12.2			7.4			7.1	
Progression Factor		1.00			1.00			1.00			1.00	
Incremental Delay, d2		0.5			1.5			0.5			0.4	
Delay (s)		12.0			13.7			8.0			7.4	
Level of Service		B			B			A			A	
Approach Delay (s)		12.0			13.7			8.0			7.4	
Approach LOS		B			B			A			A	

Intersection Summary			
HCM Average Control Delay	9.0	HCM Level of Service	A
HCM Volume to Capacity ratio	0.31		
Actuated Cycle Length (s)	50.0	Sum of lost time (s)	8.0
Intersection Capacity Utilization	62.5%	ICU Level of Service	B
Analysis Period (min)	15		
c Critical Lane Group			

Movement	EBL	EBT	EBR	WBL	WBT	WBR	NBL	NBT	NBR	SBL	SBT	SBR
Lane Configurations												
Ideal Flow (vphpl)	1900	1900	1900	1900	1900	1900	1900	1900	1900	1900	1900	1900
Total Lost time (s)		4.0			4.0			4.0			4.0	
Lane Util. Factor		1.00			1.00			0.95			0.91	
Frpb, ped/bikes		0.96			0.96			0.99			0.98	
Flpb, ped/bikes		0.96			0.98			1.00			1.00	
Frt		0.96			0.96			0.99			0.99	
Flt Protected		0.98			0.99			1.00			1.00	
Satd. Flow (prot)		1631			1681			3476			4918	
Flt Permitted		0.86			0.87			0.92			0.91	
Satd. Flow (perm)		1426			1485			3187			4480	
Volume (vph)	46	49	39	17	41	21	24	1018	37	18	873	67
Peak-hour factor, PHF	0.94	0.94	0.94	0.94	0.94	0.94	0.94	0.94	0.94	0.94	0.94	0.94
Adj. Flow (vph)	49	52	41	18	44	22	26	1083	39	19	929	71
RTOR Reduction (vph)	0	28	0	0	19	0	0	1	0	0	4	0
Lane Group Flow (vph)	0	114	0	0	65	0	0	1147	0	0	1015	0
Confl. Peds. (#/hr)	100		100	100		100	100		100	100		100
Turn Type	Perm			Perm			Perm			Perm		
Protected Phases		4			4			2			6	
Permitted Phases	4			4			2			6		
Actuated Green, G (s)		8.6			8.6			62.4			62.4	
Effective Green, g (s)		9.1			9.1			62.9			62.9	
Actuated g/C Ratio		0.11			0.11			0.79			0.79	
Clearance Time (s)		4.5			4.5			4.5			4.5	
Vehicle Extension (s)		2.0			2.0			2.0			2.0	
Lane Grp Cap (vph)		162			169			2506			3522	
v/s Ratio Prot												
v/s Ratio Perm		c0.08			0.04			c0.36			0.23	
v/c Ratio		0.70			0.38			0.46			0.29	
Uniform Delay, d1		34.1			32.8			2.9			2.4	
Progression Factor		1.00			1.00			1.20			1.00	
Incremental Delay, d2		10.6			0.5			0.5			0.2	
Delay (s)		44.8			33.4			3.9			2.6	
Level of Service		D			C			A			A	
Approach Delay (s)		44.8			33.4			3.9			2.6	
Approach LOS		D			C			A			A	

Intersection Summary			
HCM Average Control Delay	6.8	HCM Level of Service	A
HCM Volume to Capacity ratio	0.49		
Actuated Cycle Length (s)	80.0	Sum of lost time (s)	8.0
Intersection Capacity Utilization	80.9%	ICU Level of Service	D
Analysis Period (min)	15		
c Critical Lane Group			

Movement	EBL	EBT	EBR	WBL	WBT	WBR	NBL	NBT	NBR	SBL	SBT	SBR
Lane Configurations												
Ideal Flow (vphpl)	1900	1900	1900	1900	1900	1900	1900	1900	1900	1900	1900	1900
Total Lost time (s)	4.0	4.0		4.0	4.0		4.0	4.0		4.0	4.0	
Lane Util. Factor	1.00	0.95		1.00	0.95		1.00	1.00		1.00	1.00	
Frpb, ped/bikes	1.00	1.00		1.00	1.00		1.00	1.00		1.00	1.00	
Flpb, ped/bikes	0.99	1.00		1.00	1.00		0.98	1.00		1.00	1.00	
Frt	1.00	0.99		1.00	0.98		1.00	0.99		1.00	0.99	
Flt Protected	0.95	1.00		0.95	1.00		0.95	1.00		0.95	1.00	
Satd. Flow (prot)	1760	3500		1765	3453		1739	1835		1764	1835	
Flt Permitted	0.30	1.00		0.25	1.00		0.56	1.00		0.37	1.00	
Satd. Flow (perm)	561	3500		469	3453		1017	1835		695	1835	
Volume (vph)	26	655	45	41	534	81	109	388	38	88	222	19
Peak-hour factor, PHF	0.92	0.92	0.92	0.92	0.92	0.92	0.92	0.92	0.92	0.92	0.92	0.92
Adj. Flow (vph)	28	712	49	45	580	88	118	422	41	96	241	21
RTOR Reduction (vph)	0	6	0	0	15	0	0	5	0	0	4	0
Lane Group Flow (vph)	28	755	0	45	653	0	118	459	0	96	258	0
Confl. Peds. (#/hr)	12		12	12		12	42		12	12		42
Turn Type	Perm			Perm			Perm			Perm		
Protected Phases		4			8			2			6	
Permitted Phases	4			8			2			6		
Actuated Green, G (s)	33.0	33.0		33.0	33.0		40.5	40.5		40.5	40.5	
Effective Green, g (s)	32.0	32.0		32.0	32.0		40.0	40.0		40.0	40.0	
Actuated g/C Ratio	0.40	0.40		0.40	0.40		0.50	0.50		0.50	0.50	
Clearance Time (s)	3.0	3.0		3.0	3.0		3.5	3.5		3.5	3.5	
Lane Grp Cap (vph)	224	1400		188	1381		509	918		348	918	
v/s Ratio Prot		c0.22			0.19			c0.25			0.14	
v/s Ratio Perm	0.05			0.10			0.12			0.14		
v/c Ratio	0.12	0.54		0.24	0.47		0.23	0.50		0.28	0.28	
Uniform Delay, d1	15.2	18.4		15.9	17.8		11.3	13.3		11.6	11.6	
Progression Factor	1.00	1.00		1.95	2.03		1.83	1.86		1.00	1.00	
Incremental Delay, d2	1.1	1.5		2.6	1.0		0.7	1.3		2.0	0.8	
Delay (s)	16.3	19.9		33.7	37.1		21.4	26.1		13.6	12.4	
Level of Service	B	B		C	D		C	C		B	B	
Approach Delay (s)		19.7			36.9			25.2			12.7	
Approach LOS		B			D			C			B	

Intersection Summary			
HCM Average Control Delay	25.0	HCM Level of Service	C
HCM Volume to Capacity ratio	0.52		
Actuated Cycle Length (s)	80.0	Sum of lost time (s)	8.0
Intersection Capacity Utilization	81.0%	ICU Level of Service	D
Analysis Period (min)	15		
c Critical Lane Group			

Movement	EBL	EBT	EBR	WBL	WBT	WBR	NBL	NBT	NBR	SBL	SBT	SBR
Lane Configurations												
Ideal Flow (vphpl)	1900	1900	1900	1900	1900	1900	1900	1900	1900	1900	1900	1900
Total Lost time (s)	4.0	4.0		4.0	4.0			4.0			4.0	
Lane Util. Factor	1.00	0.95		1.00	0.95			0.95			0.95	
Frpb, ped/bikes	1.00	0.99		1.00	1.00			1.00			1.00	
Flpb, ped/bikes	0.99	1.00		0.98	1.00			1.00			1.00	
Frt	1.00	0.99		1.00	0.99			0.98			0.97	
Flt Protected	0.95	1.00		0.95	1.00			0.99			0.99	
Satd. Flow (prot)	1754	3474		1737	3509			3412			3387	
Flt Permitted	0.26	1.00		0.16	1.00			0.84			0.92	
Satd. Flow (perm)	489	3474		292	3509			2912			3126	
Volume (vph)	26	743	60	20	597	28	74	164	37	16	96	33
Peak-hour factor, PHF	0.97	0.97	0.97	0.97	0.97	0.97	0.97	0.97	0.97	0.97	0.97	0.97
Adj. Flow (vph)	27	766	62	21	615	29	76	169	38	16	99	34
RTOR Reduction (vph)	0	8	0	0	4	0	0	8	0	0	14	0
Lane Group Flow (vph)	27	820	0	21	640	0	0	275	0	0	135	0
Confl. Peds. (#/hr)	24		78	78		24	8		6	6		8
Turn Type	Perm			Perm			Perm			Perm		
Protected Phases		4			8			2			6	
Permitted Phases	4			8			2			6		
Actuated Green, G (s)	24.0	24.0		24.0	24.0			46.0			46.0	
Effective Green, g (s)	25.0	25.0		25.0	25.0			47.0			47.0	
Actuated g/C Ratio	0.31	0.31		0.31	0.31			0.59			0.59	
Clearance Time (s)	5.0	5.0		5.0	5.0			5.0			5.0	
Lane Grp Cap (vph)	153	1086		91	1097			1711			1837	
v/s Ratio Prot		c0.24			0.18							
v/s Ratio Perm	0.06			0.07				c0.09			0.04	
v/c Ratio	0.18	0.76		0.23	0.58			0.16			0.07	
Uniform Delay, d1	20.0	24.7		20.4	23.1			7.5			7.1	
Progression Factor	0.45	0.49		0.91	0.97			1.29			1.00	
Incremental Delay, d2	2.2	4.3		5.4	2.1			0.2			0.1	
Delay (s)	11.3	16.3		23.8	24.5			9.8			7.2	
Level of Service	B	B		C	C			A			A	
Approach Delay (s)		16.2			24.5			9.8			7.2	
Approach LOS		B			C			A			A	

Intersection Summary			
HCM Average Control Delay	17.4	HCM Level of Service	B
HCM Volume to Capacity ratio	0.37		
Actuated Cycle Length (s)	80.0	Sum of lost time (s)	8.0
Intersection Capacity Utilization	59.5%	ICU Level of Service	B
Analysis Period (min)	15		
c Critical Lane Group			

Movement	EBL	EBT	EBR	WBL	WBT	WBR	NBL	NBT	NBR	SBL	SBT	SBR
Lane Configurations												
Ideal Flow (vphpl)	1900	1900	1900	1900	1900	1900	1900	1900	1900	1900	1900	1900
Total Lost time (s)	4.0	4.0		4.0	4.0			4.0			4.0	
Lane Util. Factor	1.00	0.95		1.00	0.95			0.95			0.95	
Frpb, ped/bikes	1.00	1.00		1.00	1.00			0.99			1.00	
Flpb, ped/bikes	1.00	1.00		0.99	1.00			1.00			1.00	
Frt	1.00	0.99		1.00	0.98			0.95			0.98	
Flt Protected	0.95	1.00		0.95	1.00			0.99			0.99	
Satd. Flow (prot)	1764	3505		1756	3446			3326			3427	
Flt Permitted	0.31	1.00		0.26	1.00			0.88			0.76	
Satd. Flow (perm)	567	3505		473	3446			2934			2629	
Volume (vph)	51	744	40	54	586	101	56	278	150	82	205	38
Peak-hour factor, PHF	0.99	0.99	0.99	0.99	0.99	0.99	0.99	0.99	0.99	0.99	0.99	0.99
Adj. Flow (vph)	52	752	40	55	592	102	57	281	152	83	207	38
RTOR Reduction (vph)	0	5	0	0	17	0	0	47	0	0	13	0
Lane Group Flow (vph)	52	788	0	55	677	0	0	443	0	0	315	0
Confl. Peds. (#/hr)	8		39	39		8			25	25		
Turn Type	Perm			Perm			Perm			Perm		
Protected Phases		4			8			2			6	
Permitted Phases	4			8			2			6		
Actuated Green, G (s)	35.5	35.5		35.5	35.5			38.0			38.0	
Effective Green, g (s)	35.0	35.0		35.0	35.0			37.0			37.0	
Actuated g/C Ratio	0.44	0.44		0.44	0.44			0.46			0.46	
Clearance Time (s)	3.5	3.5		3.5	3.5			3.0			3.0	
Lane Grp Cap (vph)	248	1533		207	1508			1357			1216	
v/s Ratio Prot		c0.22			0.20							
v/s Ratio Perm	0.09			0.12				c0.15			0.12	
v/c Ratio	0.21	0.51		0.27	0.45			0.33			0.26	
Uniform Delay, d1	13.9	16.3		14.3	15.7			13.6			13.1	
Progression Factor	0.93	1.08		1.75	1.86			0.78			1.00	
Incremental Delay, d2	1.4	0.9		2.6	0.8			0.6			0.5	
Delay (s)	14.3	18.6		27.8	30.2			11.3			13.6	
Level of Service	B	B		C	C			B			B	
Approach Delay (s)		18.3			30.0			11.3			13.6	
Approach LOS		B			C			B			B	

Intersection Summary			
HCM Average Control Delay	19.9	HCM Level of Service	B
HCM Volume to Capacity ratio	0.42		
Actuated Cycle Length (s)	80.0	Sum of lost time (s)	8.0
Intersection Capacity Utilization	84.3%	ICU Level of Service	E
Analysis Period (min)	15		
c Critical Lane Group			

Movement	EBT	EBR	WBL	WBT	NBL	NBR
Lane Configurations						
Sign Control	Free			Free	Stop	
Grade	0%			0%	0%	
Volume (veh/h)	886	77	71	725	0	0
Peak Hour Factor	0.97	0.97	0.97	0.97	0.97	0.97
Hourly flow rate (vph)	913	79	73	747	0	0
Pedestrians					348	
Lane Width (ft)					0.0	
Walking Speed (ft/s)					4.0	
Percent Blockage					0	
Right turn flare (veh)						
Median type					None	
Median storage veh)						
Upstream signal (ft)	673			487		
pX, platoon unblocked			0.86		0.89	0.86
vC, conflicting volume			1341		1821	844
vC1, stage 1 conf vol						
vC2, stage 2 conf vol						
vCu, unblocked vol			1232		1587	654
tC, single (s)			4.1		6.8	6.9
tC, 2 stage (s)						
tF (s)			2.2		3.5	3.3
p0 queue free %			85		100	100
cM capacity (veh/h)			482		74	351

Direction, Lane #	EB 1	EB 2	WB 1	WB 2	WB 3
Volume Total	609	384	73	374	374
Volume Left	0	0	73	0	0
Volume Right	0	79	0	0	0
cSH	1700	1700	482	1700	1700
Volume to Capacity	0.36	0.23	0.15	0.22	0.22
Queue Length 95th (ft)	0	0	13	0	0
Control Delay (s)	0.0	0.0	13.8	0.0	0.0
Lane LOS			B		
Approach Delay (s)	0.0		1.2		
Approach LOS					

Intersection Summary			
Average Delay	0.6		
Intersection Capacity Utilization	54.3%	ICU Level of Service	A
Analysis Period (min)	15		

Movement	EBT	EBR	WBL	WBT	NBL	NBR
Lane Configurations						
Sign Control	Free			Free	Stop	
Grade	0%			0%	0%	
Volume (veh/h)	808	78	0	796	0	71
Peak Hour Factor	0.93	0.93	0.93	0.93	0.93	0.93
Hourly flow rate (vph)	869	84	0	856	0	76
Pedestrians				109	109	
Lane Width (ft)				12.0	12.0	
Walking Speed (ft/s)				4.0	4.0	
Percent Blockage				9	9	
Right turn flare (veh)						
Median type					None	
Median storage veh)						
Upstream signal (ft)	754			406		
pX, platoon unblocked			0.88		0.94	0.88
vC, conflicting volume			1062		1448	694
vC1, stage 1 conf vol						
vC2, stage 2 conf vol						
vCu, unblocked vol			939		1085	524
tC, single (s)			4.1		6.8	6.9
tC, 2 stage (s)						
tF (s)			2.2		3.5	3.3
p0 queue free %			100		100	79
cM capacity (veh/h)			583		180	364

Direction, Lane #	EB 1	EB 2	WB 1	WB 2	NB 1
Volume Total	579	373	428	428	76
Volume Left	0	0	0	0	0
Volume Right	0	84	0	0	76
cSH	1700	1700	1700	1700	364
Volume to Capacity	0.34	0.22	0.25	0.25	0.21
Queue Length 95th (ft)	0	0	0	0	19
Control Delay (s)	0.0	0.0	0.0	0.0	17.5
Lane LOS					C
Approach Delay (s)	0.0		0.0		17.5
Approach LOS					C

Intersection Summary			
Average Delay	0.7		
Intersection Capacity Utilization	45.3%	ICU Level of Service	A
Analysis Period (min)	15		

Movement	EBT	EBR	WBL	WBT	NBL	NBR
Lane Configurations						
Sign Control	Free			Free	Stop	
Grade	0%			0%	0%	
Volume (veh/h)	876	3	0	796	0	54
Peak Hour Factor	0.92	0.92	0.92	0.92	0.92	0.92
Hourly flow rate (vph)	952	3	0	865	0	59
Pedestrians				109	109	
Lane Width (ft)				12.0	12.0	
Walking Speed (ft/s)				4.0	4.0	
Percent Blockage				9	9	
Right turn flare (veh)						
Median type					None	
Median storage veh)						
Upstream signal (ft)	971			189		
pX, platoon unblocked			0.94		0.91	0.94
vC, conflicting volume			1064		1495	696
vC1, stage 1 conf vol						
vC2, stage 2 conf vol						
vCu, unblocked vol			1006		1251	614
tC, single (s)			4.1		6.8	6.9
tC, 2 stage (s)						
tF (s)			2.2		3.5	3.3
p0 queue free %			100		100	83
cM capacity (veh/h)			586		136	338

Direction, Lane #	EB 1	EB 2	WB 1	WB 2	NB 1
Volume Total	635	321	433	433	59
Volume Left	0	0	0	0	0
Volume Right	0	3	0	0	59
cSH	1700	1700	1700	1700	338
Volume to Capacity	0.37	0.19	0.25	0.25	0.17
Queue Length 95th (ft)	0	0	0	0	15
Control Delay (s)	0.0	0.0	0.0	0.0	17.9
Lane LOS					C
Approach Delay (s)	0.0		0.0		17.9
Approach LOS					C

Intersection Summary			
Average Delay	0.6		
Intersection Capacity Utilization	44.2%	ICU Level of Service	A
Analysis Period (min)	15		

Movement	EBL	EBT	EBR	WBL	WBT	WBR	NBL	NBT	NBR	SBL	SBT	SBR
Lane Configurations												
Ideal Flow (vphpl)	1900	1900	1900	1900	1900	1900	1900	1900	1900	1900	1900	1900
Total Lost time (s)	4.0	4.0		4.0	4.0		4.0	4.0		4.0	4.0	
Lane Util. Factor	1.00	0.95		1.00	0.95		1.00	0.95		1.00	0.95	
Frpb, ped/bikes	1.00	0.98		1.00	0.97		1.00	0.99		1.00	0.97	
Flpb, ped/bikes	0.93	1.00		0.98	1.00		1.00	1.00		1.00	1.00	
Frt	1.00	0.98		1.00	0.98		1.00	0.99		1.00	0.97	
Flt Protected	0.95	1.00		0.95	1.00		0.95	1.00		0.95	1.00	
Satd. Flow (prot)	1641	3413		1728	3364		1770	3483		1770	3335	
Flt Permitted	0.32	1.00		0.17	1.00		0.95	1.00		0.95	1.00	
Satd. Flow (perm)	552	3413		306	3364		1770	3483		1770	3335	
Volume (vph)	159	665	106	23	463	76	191	810	58	103	559	147
Peak-hour factor, PHF	0.98	0.98	0.98	0.98	0.98	0.98	0.98	0.98	0.98	0.98	0.98	0.98
Adj. Flow (vph)	162	679	108	23	472	78	195	827	59	105	570	150
RTOR Reduction (vph)	0	17	0	0	18	0	0	6	0	0	27	0
Lane Group Flow (vph)	162	770	0	23	532	0	195	880	0	105	693	0
Confl. Peds. (#/hr)	94		86	86		94			40			111
Turn Type	Perm			Perm			Prot			Prot		
Protected Phases		4			8		5	2		1	6	
Permitted Phases	4			8								
Actuated Green, G (s)	23.3	23.3		23.3	23.3		11.7	35.3		7.9	31.5	
Effective Green, g (s)	23.8	23.8		23.8	23.8		12.2	35.8		8.4	32.0	
Actuated g/C Ratio	0.30	0.30		0.30	0.30		0.15	0.45		0.11	0.40	
Clearance Time (s)	4.5	4.5		4.5	4.5		4.5	4.5		4.5	4.5	
Vehicle Extension (s)	2.0	2.0		2.0	2.0		2.0	2.0		2.0	2.0	
Lane Grp Cap (vph)	164	1015		91	1001		270	1559		186	1334	
v/s Ratio Prot		0.23			0.16		c0.11	c0.25		0.06	0.21	
v/s Ratio Perm	c0.29			0.08								
v/c Ratio	0.99	0.76		0.25	0.53		0.72	0.56		0.56	0.52	
Uniform Delay, d1	28.0	25.5		21.3	23.5		32.3	16.3		34.1	18.2	
Progression Factor	1.18	1.26		1.00	1.00		1.00	1.00		0.94	1.02	
Incremental Delay, d2	63.8	2.8		0.5	0.3		7.8	1.5		2.3	1.4	
Delay (s)	96.9	34.8		21.9	23.7		40.1	17.8		34.3	19.9	
Level of Service	F	C		C	C		D	B		C	B	
Approach Delay (s)		45.4			23.7			21.8			21.8	
Approach LOS		D			C			C			C	

Intersection Summary			
HCM Average Control Delay	28.6	HCM Level of Service	C
HCM Volume to Capacity ratio	0.75		
Actuated Cycle Length (s)	80.0	Sum of lost time (s)	12.0
Intersection Capacity Utilization	72.1%	ICU Level of Service	C
Analysis Period (min)	15		

c Critical Lane Group

Movement	EBL	EBR	NBL	NBT	SBT	SBR
Lane Configurations						
Sign Control	Stop			Free	Free	
Grade	0%			0%	0%	
Volume (veh/h)	17	72	23	1017	692	14
Peak Hour Factor	0.96	0.96	0.96	0.96	0.96	0.96
Hourly flow rate (vph)	18	75	24	1059	721	15
Pedestrians	100			100	100	
Lane Width (ft)	12.0			12.0	12.0	
Walking Speed (ft/s)	4.0			4.0	4.0	
Percent Blockage	8			8	8	
Right turn flare (veh)						
Median type	None					
Median storage veh)						
Upstream signal (ft)				396	625	
pX, platoon unblocked	0.94	0.91	0.91			
vC, conflicting volume	1506	568	835			
vC1, stage 1 conf vol						
vC2, stage 2 conf vol						
vCu, unblocked vol	1188	426	720			
tC, single (s)	6.8	6.9	4.1			
tC, 2 stage (s)						
tF (s)	3.5	3.3	2.2			
p0 queue free %	87	83	97			
cM capacity (veh/h)	138	441	732			

Direction, Lane #	EB 1	NB 1	NB 2	NB 3	SB 1	SB 2
Volume Total	93	24	530	530	481	255
Volume Left	18	24	0	0	0	0
Volume Right	75	0	0	0	0	15
cSH	311	732	1700	1700	1700	1700
Volume to Capacity	0.30	0.03	0.31	0.31	0.28	0.15
Queue Length 95th (ft)	30	3	0	0	0	0
Control Delay (s)	21.4	10.1	0.0	0.0	0.0	0.0
Lane LOS	C	B				
Approach Delay (s)	21.4	0.2			0.0	
Approach LOS	C					

Intersection Summary			
Average Delay	1.2		
Intersection Capacity Utilization	48.0%	ICU Level of Service	A
Analysis Period (min)	15		

Movement	WBL	WBR	NBT	NBR	SBL	SBT
Lane Configurations						
Sign Control	Stop		Free			Free
Grade	0%		0%			0%
Volume (veh/h)	7	32	1005	31	15	750
Peak Hour Factor	0.90	0.90	0.90	0.90	0.90	0.90
Hourly flow rate (vph)	8	36	1117	34	17	833
Pedestrians	52		52			45
Lane Width (ft)	12.0		12.0			12.0
Walking Speed (ft/s)	4.0		4.0			4.0
Percent Blockage	4		4			4
Right turn flare (veh)						
Median type	None					
Median storage veh)						
Upstream signal (ft)			230			791
pX, platoon unblocked	0.88	0.86			0.86	
vC, conflicting volume	1688	673			1203	
vC1, stage 1 conf vol						
vC2, stage 2 conf vol						
vCu, unblocked vol	1477	452			1071	
tC, single (s)	6.8	6.9			4.1	
tC, 2 stage (s)						
tF (s)	3.5	3.3			2.2	
p0 queue free %	91	92			97	
cM capacity (veh/h)	91	438			531	

Direction, Lane #	WB 1	NB 1	NB 2	SB 1	SB 2	SB 3
Volume Total	43	744	407	17	417	417
Volume Left	8	0	0	17	0	0
Volume Right	36	0	34	0	0	0
cSH	261	1700	1700	531	1700	1700
Volume to Capacity	0.17	0.44	0.24	0.03	0.25	0.25
Queue Length 95th (ft)	15	0	0	2	0	0
Control Delay (s)	21.6	0.0	0.0	12.0	0.0	0.0
Lane LOS	C			B		
Approach Delay (s)	21.6	0.0		0.2		
Approach LOS	C					

Intersection Summary			
Average Delay	0.6		
Intersection Capacity Utilization	47.1%	ICU Level of Service	A
Analysis Period (min)	15		

Movement	EBL	EBT	EBR	WBL	WBT	WBR	NBL	NBT	NBR	SBL	SBT	SBR
Lane Configurations												
Ideal Flow (vphpl)	1900	1900	1900	1900	1900	1900	1900	1900	1900	1900	1900	1900
Total Lost time (s)		4.0		4.0	4.0			4.0		4.0	4.0	
Lane Util. Factor		0.91		1.00	0.95			1.00		1.00	1.00	
Frpb, ped/bikes		1.00		1.00	0.99			1.00		1.00	1.00	
Flpb, ped/bikes		1.00		1.00	1.00			1.00		1.00	1.00	
Frt		0.99		1.00	0.95			0.98		1.00	0.99	
Flt Protected		0.99		0.95	1.00			0.99		0.95	1.00	
Satd. Flow (prot)		5011		1768	3328			1800		1763	1841	
Flt Permitted		0.80		0.34	1.00			0.82		0.27	1.00	
Satd. Flow (perm)		4019		624	3328			1486		503	1841	
Volume (vph)	112	609	27	63	316	167	58	359	84	65	285	20
Peak-hour factor, PHF	0.98	0.98	0.98	0.98	0.98	0.98	0.98	0.98	0.98	0.98	0.98	0.98
Adj. Flow (vph)	114	621	28	64	322	170	59	366	86	66	291	20
RTOR Reduction (vph)	0	5	0	0	70	0	0	9	0	0	3	0
Lane Group Flow (vph)	0	758	0	64	422	0	0	502	0	66	308	0
Confl. Peds. (#/hr)	24		4	4		24	24		12	12		24
Turn Type	Perm			Perm			Perm			Perm		
Protected Phases		4			8			2			6	
Permitted Phases	4			8			2			6		
Actuated Green, G (s)		46.0		46.0	46.0			24.0		24.0	24.0	
Effective Green, g (s)		47.0		47.0	47.0			25.0		25.0	25.0	
Actuated g/C Ratio		0.59		0.59	0.59			0.31		0.31	0.31	
Clearance Time (s)		5.0		5.0	5.0			5.0		5.0	5.0	
Lane Grp Cap (vph)		2361		367	1955			464		157	575	
v/s Ratio Prot					0.13						0.17	
v/s Ratio Perm		c0.19		0.10				c0.34		0.13		
v/c Ratio		0.32		0.17	0.22			1.08		0.42	0.54	
Uniform Delay, d1		8.4		7.6	7.8			27.5		21.8	22.7	
Progression Factor		1.00		1.47	1.72			1.00		0.75	0.75	
Incremental Delay, d2		0.4		1.0	0.3			65.7		7.9	3.5	
Delay (s)		8.7		12.2	13.7			93.2		24.1	20.4	
Level of Service		A		B	B			F		C	C	
Approach Delay (s)		8.7			13.5			93.2			21.1	
Approach LOS		A			B			F			C	

Intersection Summary			
HCM Average Control Delay	31.6	HCM Level of Service	C
HCM Volume to Capacity ratio	0.58		
Actuated Cycle Length (s)	80.0	Sum of lost time (s)	8.0
Intersection Capacity Utilization	137.4%	ICU Level of Service	H
Analysis Period (min)	15		
c Critical Lane Group			

Movement	EBL	EBT	EBR	WBL	WBT	WBR	NBL	NBT	NBR	SBL	SBT	SBR
Lane Configurations												
Ideal Flow (vphpl)	1900	1900	1900	1900	1900	1900	1900	1900	1900	1900	1900	1900
Total Lost time (s)		4.0			4.0		4.0	4.0		4.0	4.0	
Lane Util. Factor		0.91			0.91		1.00	1.00		1.00	1.00	
Frpb, ped/bikes		1.00			1.00		1.00	1.00		1.00	1.00	
Flpb, ped/bikes		1.00			1.00		1.00	1.00		1.00	1.00	
Frt		0.99			0.98		1.00	0.96		1.00	0.98	
Flt Protected		1.00			0.99		0.95	1.00		0.95	1.00	
Satd. Flow (prot)		5010			4958		1770	1787		1763	1826	
Flt Permitted		0.88			0.80		0.64	1.00		0.38	1.00	
Satd. Flow (perm)		4433			4012		1196	1787		714	1826	
Volume (vph)	39	549	40	67	392	63	41	203	65	56	112	17
Peak-hour factor, PHF	0.95	0.95	0.95	0.95	0.95	0.95	0.95	0.95	0.95	0.95	0.95	0.95
Adj. Flow (vph)	41	578	42	71	413	66	43	214	68	59	118	18
RTOR Reduction (vph)	0	10	0	0	22	0	0	14	0	0	7	0
Lane Group Flow (vph)	0	651	0	0	528	0	43	268	0	59	129	0
Confl. Peds. (#/hr)			12	12					6	6		
Turn Type	Perm			Perm			Perm			Perm		
Protected Phases		4			8			2			6	
Permitted Phases	4			8			2			6		
Actuated Green, G (s)		51.5			51.5		20.5	20.5		20.5	20.5	
Effective Green, g (s)		51.5			51.5		20.5	20.5		20.5	20.5	
Actuated g/C Ratio		0.64			0.64		0.26	0.26		0.26	0.26	
Clearance Time (s)		4.0			4.0		4.0	4.0		4.0	4.0	
Lane Grp Cap (vph)		2854			2583		306	458		183	468	
v/s Ratio Prot								c0.15			0.07	
v/s Ratio Perm		c0.15			0.13		0.04			0.08		
v/c Ratio		0.23			0.20		0.14	0.58		0.32	0.28	
Uniform Delay, d1		6.0			5.8		23.0	26.0		24.1	23.8	
Progression Factor		1.25			1.04		1.00	1.00		1.19	1.22	
Incremental Delay, d2		0.2			0.2		1.0	5.4		4.5	1.4	
Delay (s)		7.6			6.3		23.9	31.4		33.2	30.4	
Level of Service		A			A		C	C		C	C	
Approach Delay (s)		7.6			6.3			30.4			31.2	
Approach LOS		A			A			C			C	

Intersection Summary			
HCM Average Control Delay	14.1	HCM Level of Service	B
HCM Volume to Capacity ratio	0.33		
Actuated Cycle Length (s)	80.0	Sum of lost time (s)	8.0
Intersection Capacity Utilization	68.5%	ICU Level of Service	C
Analysis Period (min)	15		
c Critical Lane Group			

Movement	EBL	EBT	EBR	WBL	WBT	WBR	NBL	NBT	NBR	SBL	SBT	SBR
Lane Configurations												
Ideal Flow (vphpl)	1900	1900	1900	1900	1900	1900	1900	1900	1900	1900	1900	1900
Total Lost time (s)		4.0			4.0			4.0			4.0	
Lane Util. Factor		0.91			0.91			0.95			0.95	
Frpb, ped/bikes		1.00			1.00			1.00			1.00	
Flpb, ped/bikes		1.00			1.00			1.00			1.00	
Frt		0.99			0.95			0.97			0.99	
Flt Protected		0.99			1.00			0.99			0.99	
Satd. Flow (prot)		5012			4810			3385			3438	
Flt Permitted		0.80			0.85			0.87			0.79	
Satd. Flow (perm)		4041			4096			2967			2746	
Volume (vph)	74	582	34	52	449	220	39	185	58	77	201	25
Peak-hour factor, PHF	0.99	0.99	0.99	0.99	0.99	0.99	0.99	0.99	0.99	0.99	0.99	0.99
Adj. Flow (vph)	75	588	34	53	454	222	39	187	59	78	203	25
RTOR Reduction (vph)	0	7	0	0	79	0	0	29	0	0	8	0
Lane Group Flow (vph)	0	690	0	0	650	0	0	256	0	0	298	0
Confl. Peds. (#/hr)	9		17	17		9	12		10	10		12
Turn Type	Perm			Perm			Perm			Perm		
Protected Phases		4			8			2			6	
Permitted Phases	4			8			2			6		
Actuated Green, G (s)		50.0			50.0			19.0			19.0	
Effective Green, g (s)		51.5			51.5			20.5			20.5	
Actuated g/C Ratio		0.64			0.64			0.26			0.26	
Clearance Time (s)		5.5			5.5			5.5			5.5	
Lane Grp Cap (vph)		2601			2637			760			704	
v/s Ratio Prot												
v/s Ratio Perm		c0.17			0.16			0.09			c0.11	
v/c Ratio		0.27			0.25			0.34			0.42	
Uniform Delay, d1		6.1			6.0			24.2			24.8	
Progression Factor		1.46			1.00			1.00			0.59	
Incremental Delay, d2		0.2			0.2			1.2			1.8	
Delay (s)		9.2			6.3			25.4			16.5	
Level of Service		A			A			C			B	
Approach Delay (s)		9.2			6.3			25.4			16.5	
Approach LOS		A			A			C			B	

Intersection Summary			
HCM Average Control Delay	11.5	HCM Level of Service	B
HCM Volume to Capacity ratio	0.31		
Actuated Cycle Length (s)	80.0	Sum of lost time (s)	8.0
Intersection Capacity Utilization	101.9%	ICU Level of Service	G
Analysis Period (min)	15		
c Critical Lane Group			

Movement	EBL	EBT	WBT	WBR	SBL	SBR
Lane Configurations						
Sign Control		Free	Free		Stop	
Grade		0%	0%		0%	
Volume (veh/h)	0	746	495	20	0	228
Peak Hour Factor	0.96	0.96	0.96	0.96	0.96	0.96
Hourly flow rate (vph)	0	777	516	21	0	238
Pedestrians		79			79	
Lane Width (ft)		12.0			12.0	
Walking Speed (ft/s)		4.0			4.0	
Percent Blockage		7			7	
Right turn flare (veh)						
Median type					None	
Median storage veh)						
Upstream signal (ft)		698	473			
pX, platoon unblocked						
vC, conflicting volume	615				864	340
vC1, stage 1 conf vol						
vC2, stage 2 conf vol						
vCu, unblocked vol	615				864	340
tC, single (s)	4.1				6.8	6.9
tC, 2 stage (s)						
tF (s)	2.2				3.5	3.3
p0 queue free %	100				100	58
cM capacity (veh/h)	897				274	572

Direction, Lane #	EB 1	EB 2	EB 3	WB 1	WB 2	WB 3	SB 1
Volume Total	259	259	259	206	206	124	238
Volume Left	0	0	0	0	0	0	0
Volume Right	0	0	0	0	0	21	238
cSH	1700	1700	1700	1700	1700	1700	572
Volume to Capacity	0.15	0.15	0.15	0.12	0.12	0.07	0.42
Queue Length 95th (ft)	0	0	0	0	0	0	51
Control Delay (s)	0.0	0.0	0.0	0.0	0.0	0.0	15.7
Lane LOS							C
Approach Delay (s)	0.0			0.0			15.7
Approach LOS							C

Intersection Summary			
Average Delay	2.4		
Intersection Capacity Utilization	39.2%	ICU Level of Service	A
Analysis Period (min)	15		

Movement	EBL	EBT	EBR	WBL	WBT	WBR	NBL	NBT	NBR	SBL	SBT	SBR
Lane Configurations												
Ideal Flow (vphpl)	1900	1900	1900	1900	1900	1900	1900	1900	1900	1900	1900	1900
Total Lost time (s)		4.0			4.0		4.0	4.0		4.0	4.0	
Lane Util. Factor		0.91			0.91		1.00	0.95		1.00	0.95	
Frpb, ped/bikes		1.00			0.99		1.00	0.99		1.00	1.00	
Flpb, ped/bikes		1.00			1.00		0.99	1.00		0.98	1.00	
Frt		0.99			0.95		1.00	0.98		1.00	0.99	
Flt Protected		0.99			0.99		0.95	1.00		0.95	1.00	
Satd. Flow (prot)		4972			4769		1750	3440		1738	3489	
Flt Permitted		0.71			0.78		0.36	1.00		0.26	1.00	
Satd. Flow (perm)		3575			3716		657	3440		478	3489	
Volume (vph)	138	566	50	61	351	191	90	709	98	152	569	46
Peak-hour factor, PHF	0.90	0.90	0.90	0.90	0.90	0.90	0.90	0.90	0.90	0.90	0.90	0.90
Adj. Flow (vph)	153	629	56	68	390	212	100	788	109	169	632	51
RTOR Reduction (vph)	0	7	0	0	15	0	0	7	0	0	4	0
Lane Group Flow (vph)	0	831	0	0	655	0	100	890	0	169	679	0
Confl. Peds. (#/hr)	26		19			26	39		92	92		39
Turn Type	Perm			Prot			Perm			Perm		
Protected Phases		4		3	8			2			6	
Permitted Phases	4						2			6		
Actuated Green, G (s)		19.3			19.3		34.2	34.2		34.2	34.2	
Effective Green, g (s)		20.8			20.8		35.2	35.2		35.2	35.2	
Actuated g/C Ratio		0.33			0.33		0.55	0.55		0.55	0.55	
Clearance Time (s)		5.5			5.5		5.0	5.0		5.0	5.0	
Vehicle Extension (s)		2.0			2.0		2.0	2.0		2.0	2.0	
Lane Grp Cap (vph)		1162			1208		361	1892		263	1919	
v/s Ratio Prot								0.26			0.19	
v/s Ratio Perm		c0.23			0.18		0.15			c0.35		
v/c Ratio		0.71			9.64dl		0.28	0.47		0.64	0.35	
Uniform Delay, d1		19.0			17.7		7.6	8.7		10.0	8.0	
Progression Factor		1.00			1.00		1.00	1.00		1.00	1.00	
Incremental Delay, d2		1.8			0.3		1.9	0.8		11.5	0.5	
Delay (s)		20.8			18.0		9.5	9.6		21.5	8.6	
Level of Service		C			B		A	A		C	A	
Approach Delay (s)		20.8			18.0			9.6			11.1	
Approach LOS		C			B			A			B	

Intersection Summary			
HCM Average Control Delay	14.4	HCM Level of Service	B
HCM Volume to Capacity ratio	0.67		
Actuated Cycle Length (s)	64.0	Sum of lost time (s)	8.0
Intersection Capacity Utilization	78.7%	ICU Level of Service	D
Analysis Period (min)	15		

dl Defacto Left Lane. Recode with 1 though lane as a left lane.
dr Defacto Right Lane. Recode with 1 though lane as a right lane.
c Critical Lane Group

Movement	EBL	EBT	EBR	WBL	WBT	WBR	NBL	NBT	NBR	SBL	SBT	SBR
Lane Configurations												
Ideal Flow (vphpl)	1900	1900	1900	1900	1900	1900	1900	1900	1900	1900	1900	1900
Total Lost time (s)		4.0			4.0			4.0	4.0		4.0	
Lane Util. Factor		0.91			0.91			1.00	1.00		1.00	
Frpb, ped/bikes		1.00			1.00			1.00	0.89		0.94	
Flpb, ped/bikes		1.00			1.00			0.97	1.00		0.98	
Frt		1.00			0.99			1.00	0.85		0.93	
Flt Protected		1.00			0.99			0.98	1.00		0.99	
Satd. Flow (prot)		5027			4980			1780	1406		1582	
Flt Permitted		0.89			0.77			0.87	1.00		0.92	
Satd. Flow (perm)		4503			3870			1577	1406		1469	
Volume (vph)	36	764	26	82	523	28	49	88	191	33	33	68
Peak-hour factor, PHF	0.99	0.99	0.99	0.99	0.99	0.99	0.99	0.99	0.99	0.99	0.99	0.99
Adj. Flow (vph)	36	772	26	83	528	28	49	89	193	33	33	69
RTOR Reduction (vph)	0	4	0	0	6	0	0	0	94	0	47	0
Lane Group Flow (vph)	0	830	0	0	633	0	0	138	99	0	88	0
Confl. Peds. (#/hr)	100		100	100		100	100		100	100		100
Turn Type	Perm			Perm			Perm		Perm	Perm		
Protected Phases		4			8			2			6	
Permitted Phases	4			8			2		2	6		
Actuated Green, G (s)		49.5			49.5			24.5	24.5		24.5	
Effective Green, g (s)		48.5			48.5			23.5	23.5		23.5	
Actuated g/C Ratio		0.61			0.61			0.29	0.29		0.29	
Clearance Time (s)		3.0			3.0			3.0	3.0		3.0	
Lane Grp Cap (vph)		2730			2346			463	413		432	
v/s Ratio Prot												
v/s Ratio Perm		c0.18			0.16			c0.09	0.07		0.06	
v/c Ratio		0.30			0.27			0.30	0.24		0.20	
Uniform Delay, d1		7.6			7.4			21.9	21.5		21.2	
Progression Factor		1.00			1.00			1.00	1.00		1.00	
Incremental Delay, d2		0.3			0.3			1.6	1.4		1.1	
Delay (s)		7.9			7.7			23.5	22.8		22.3	
Level of Service		A			A			C	C		C	
Approach Delay (s)		7.9			7.7			23.1			22.3	
Approach LOS		A			A			C			C	

Intersection Summary			
HCM Average Control Delay	11.4	HCM Level of Service	B
HCM Volume to Capacity ratio	0.30		
Actuated Cycle Length (s)	80.0	Sum of lost time (s)	8.0
Intersection Capacity Utilization	96.6%	ICU Level of Service	F
Analysis Period (min)	15		
c Critical Lane Group			

Movement	EBL	EBT	EBR	WBL	WBT	WBR	NBL	NBT	NBR	SBL	SBT	SBR
Lane Configurations												
Ideal Flow (vphpl)	1900	1900	1900	1900	1900	1900	1900	1900	1900	1900	1900	1900
Total Lost time (s)	4.0	4.0		4.0	4.0		4.0	4.0		4.0	4.0	
Lane Util. Factor	1.00	0.91		1.00	0.91		1.00	0.91		1.00	0.91	
Frpb, ped/bikes	1.00	0.99		1.00	0.99		1.00	0.99		1.00	0.99	
Flpb, ped/bikes	1.00	1.00		1.00	1.00		1.00	1.00		1.00	1.00	
Frt	1.00	0.98		1.00	0.95		1.00	0.98		1.00	0.98	
Flt Protected	0.95	1.00		0.95	1.00		0.95	1.00		0.95	1.00	
Satd. Flow (prot)	1770	4941		1770	4738		1770	4931		1770	4933	
Flt Permitted	0.95	1.00		0.95	1.00		0.95	1.00		0.95	1.00	
Satd. Flow (perm)	1770	4941		1770	4738		1770	4931		1770	4933	
Volume (vph)	187	684	83	81	369	210	167	652	106	307	376	63
Peak-hour factor, PHF	0.91	0.91	0.91	0.91	0.91	0.91	0.91	0.91	0.91	0.91	0.91	0.91
Adj. Flow (vph)	205	752	91	89	405	231	184	716	116	337	413	69
RTOR Reduction (vph)	0	15	0	0	101	0	0	22	0	0	23	0
Lane Group Flow (vph)	205	828	0	89	535	0	184	810	0	337	459	0
Confl. Peds. (#/hr)			81			22			50			43
Turn Type	Prot			Prot			Prot			Prot		
Protected Phases	3	4		3	4		1	2		1	2	
Permitted Phases												
Actuated Green, G (s)	11.0	24.1		11.0	24.1		20.9	26.0		20.9	26.0	
Effective Green, g (s)	11.0	25.1		11.0	25.1		20.9	27.0		20.9	27.0	
Actuated g/C Ratio	0.11	0.25		0.11	0.25		0.21	0.27		0.21	0.27	
Clearance Time (s)	4.0	5.0		4.0	5.0		4.0	5.0		4.0	5.0	
Vehicle Extension (s)	2.0	2.0		2.0	2.0		2.0	2.0		2.0	2.0	
Lane Grp Cap (vph)	195	1240		195	1189		370	1331		370	1332	
v/s Ratio Prot	c0.12	c0.17		0.05	0.11		0.10	c0.16		c0.19	0.09	
v/s Ratio Perm												
v/c Ratio	1.05	0.67		0.46	0.45		0.50	0.61		0.91	0.34	
Uniform Delay, d1	44.5	33.7		41.7	31.6		34.9	31.9		38.6	29.4	
Progression Factor	1.00	1.00		1.00	1.00		1.00	1.00		1.00	1.00	
Incremental Delay, d2	78.6	2.9		0.6	1.2		0.4	2.1		25.5	0.7	
Delay (s)	123.1	36.6		42.3	32.9		35.3	34.0		64.1	30.1	
Level of Service	F	D		D	C		D	C		E	C	
Approach Delay (s)		53.5			34.0			34.2			44.1	
Approach LOS		D			C			C			D	

Intersection Summary			
HCM Average Control Delay	42.0	HCM Level of Service	D
HCM Volume to Capacity ratio	0.76		
Actuated Cycle Length (s)	100.0	Sum of lost time (s)	16.0
Intersection Capacity Utilization	81.5%	ICU Level of Service	D
Analysis Period (min)	15		
c Critical Lane Group			

Movement	EBL	EBT	EBR	WBL	WBT	WBR	NBL	NBT	NBR	SBL	SBT	SBR
Lane Configurations												
Ideal Flow (vphpl)	1900	1900	1900	1900	1900	1900	1900	1900	1900	1900	1900	1900
Total Lost time (s)		4.0			4.0		4.0	4.0		4.0	4.0	
Lane Util. Factor		1.00			1.00		1.00	0.95		1.00	0.95	
Frpb, ped/bikes		0.94			0.97		1.00	0.99		1.00	0.99	
Flpb, ped/bikes		0.96			0.97		0.95	1.00		0.93	1.00	
Frt		0.95			0.97		1.00	0.99		1.00	0.99	
Flt Protected		0.98			0.98		0.95	1.00		0.95	1.00	
Satd. Flow (prot)		1562			1661		1684	3464		1638	3455	
Flt Permitted		0.71			0.84		0.31	1.00		0.43	1.00	
Satd. Flow (perm)		1140			1415		556	3464		735	3455	
Volume (vph)	96	33	65	42	59	35	40	513	35	30	739	56
Peak-hour factor, PHF	0.94	0.94	0.94	0.94	0.94	0.94	0.94	0.94	0.94	0.94	0.94	0.94
Adj. Flow (vph)	102	35	69	45	63	37	43	546	37	32	786	60
RTOR Reduction (vph)	0	25	0	0	16	0	0	4	0	0	5	0
Lane Group Flow (vph)	0	181	0	0	129	0	43	579	0	32	841	0
Confl. Peds. (#/hr)	100		100	100		100	100		100	100		100
Turn Type	Perm			Perm			Perm			Perm		
Protected Phases		4			4			2			6	
Permitted Phases	4			4			2			6		
Actuated Green, G (s)		15.9			15.9		62.1	62.1		62.1	62.1	
Effective Green, g (s)		15.4			15.4		61.6	61.6		61.6	61.6	
Actuated g/C Ratio		0.18			0.18		0.72	0.72		0.72	0.72	
Clearance Time (s)		3.5			3.5		3.5	3.5		3.5	3.5	
Vehicle Extension (s)		2.0			2.0		2.0	2.0		2.0	2.0	
Lane Grp Cap (vph)		207			256		403	2510		533	2504	
v/s Ratio Prot								0.17			c0.24	
v/s Ratio Perm		c0.16			0.09		0.08			0.04		
v/c Ratio		0.88			0.50		0.11	0.23		0.06	0.34	
Uniform Delay, d1		33.9			31.3		3.5	3.9		3.4	4.3	
Progression Factor		1.00			1.00		0.93	0.84		1.00	1.00	
Incremental Delay, d2		30.5			0.6		0.5	0.2		0.2	0.4	
Delay (s)		64.4			31.9		3.7	3.5		3.6	4.6	
Level of Service		E			C		A	A		A	A	
Approach Delay (s)		64.4			31.9			3.5			4.6	
Approach LOS		E			C			A			A	

Intersection Summary			
HCM Average Control Delay	13.0	HCM Level of Service	B
HCM Volume to Capacity ratio	0.44		
Actuated Cycle Length (s)	85.0	Sum of lost time (s)	8.0
Intersection Capacity Utilization	56.8%	ICU Level of Service	B
Analysis Period (min)	15		

c Critical Lane Group

Movement	EBL	EBT	EBR	WBL	WBT	WBR	NBL	NBT	NBR	SBL	SBT	SBR
Lane Configurations												
Ideal Flow (vphpl)	1900	1900	1900	1900	1900	1900	1900	1900	1900	1900	1900	1900
Total Lost time (s)	4.0	4.0		4.0	4.0		4.0	4.0		4.0	4.0	
Lane Util. Factor	1.00	0.95		1.00	0.95		1.00	0.95		1.00	0.95	
Frpb, ped/bikes	1.00	0.97		1.00	0.96		1.00	0.99		1.00	0.93	
Flpb, ped/bikes	1.00	1.00		1.00	1.00		0.95	1.00		0.96	1.00	
Frt	1.00	0.96		1.00	0.97		1.00	0.99		1.00	0.94	
Flt Protected	0.95	1.00		0.95	1.00		0.95	1.00		0.95	1.00	
Satd. Flow (prot)	1770	3308		1770	3285		1688	3488		1693	3109	
Flt Permitted	0.95	1.00		0.95	1.00		0.30	1.00		0.43	1.00	
Satd. Flow (perm)	1770	3308		1770	3285		535	3488		763	3109	
Volume (vph)	127	316	100	56	383	98	113	484	29	95	466	294
Peak-hour factor, PHF	0.98	0.98	0.98	0.98	0.98	0.98	0.98	0.98	0.98	0.98	0.98	0.98
Adj. Flow (vph)	130	322	102	57	391	100	115	494	30	97	476	300
RTOR Reduction (vph)	0	36	0	0	29	0	0	5	0	0	101	0
Lane Group Flow (vph)	130	388	0	57	462	0	115	519	0	97	675	0
Confl. Peds. (#/hr)			100			100	100		100	100		100
Turn Type	Prot			Prot			Perm			Perm		
Protected Phases	7	4		3	8			2			6	
Permitted Phases							2			6		
Actuated Green, G (s)	9.2	21.6		5.1	17.5		44.8	44.8		44.8	44.8	
Effective Green, g (s)	9.7	21.1		5.6	17.0		46.3	46.3		46.3	46.3	
Actuated g/C Ratio	0.11	0.25		0.07	0.20		0.54	0.54		0.54	0.54	
Clearance Time (s)	4.5	3.5		4.5	3.5		5.5	5.5		5.5	5.5	
Vehicle Extension (s)	2.0	2.0		2.0	2.0		2.0	2.0		2.0	2.0	
Lane Grp Cap (vph)	202	821		117	657		291	1900		416	1693	
v/s Ratio Prot	c0.07	0.12		0.03	c0.14			0.15			c0.22	
v/s Ratio Perm							0.22			0.13		
v/c Ratio	0.64	0.47		0.49	0.70		0.40	0.27		0.23	0.40	
Uniform Delay, d1	36.0	27.2		38.3	31.7		11.2	10.4		10.1	11.3	
Progression Factor	1.00	1.00		1.00	1.00		1.00	1.00		1.18	1.33	
Incremental Delay, d2	5.2	0.2		1.2	2.8		4.0	0.4		1.2	0.7	
Delay (s)	41.2	27.4		39.5	34.5		15.2	10.7		13.1	15.7	
Level of Service	D	C		D	C		B	B		B	B	
Approach Delay (s)		30.6			35.0			11.5			15.4	
Approach LOS		C			C			B			B	

Intersection Summary			
HCM Average Control Delay	21.8	HCM Level of Service	C
HCM Volume to Capacity ratio	0.50		
Actuated Cycle Length (s)	85.0	Sum of lost time (s)	12.0
Intersection Capacity Utilization	69.5%	ICU Level of Service	C
Analysis Period (min)	15		

c Critical Lane Group

APPENDIX C:
PROJECT TRIP GENERATION

FEHR & PEERS
TRANSPORTATION CONSULTANTS

MEMORANDUM

Date: September 5, 2007

To: Lynette Dias and Charity Wagner, RRM Design Group

From: Sam Tabibnia and Emily Johnson

Subject: ***MacArthur Transit Village Trip Generation***

WC06-2279

This memorandum presents the methodology used to estimate trip generation that we propose to use for the MacArthur Transit Village project.

The proposed MacArthur Transit Village is a mixed-use transit-oriented development (TOD) that includes 675 residential units, up to 44,000 square feet of retail, and 5,000 square feet of community space, to be developed on the existing MacArthur BART station surface parking lot and seven adjacent parcels. Approximately half of the existing 600 surface parking spaces would be removed, and the remaining 300 spaces would be replaced in a parking garage.

PROJECT TRIP GENERATION

Trip generation for the project would include trips related to the residential, retail, and community space components, as well as any change in trips related to the loss of 300 BART parking spaces. The trip generation will be adjusted to account for the project's transit-oriented location and other factors as applicable. Each of these project components is described below.

Residential Trips

The proposed MacArthur BART Transit Village includes 675 residential units, which includes a mix of below market rate rental units and market-rate for-sale condominiums. We have estimated the residential trip generation using the ITE regression equation for Condominiums for the entire 675 units. Given the development's location adjacent to the BART station, we have applied a transit-oriented trip reduction factor. To determine an appropriate trip reduction factor, we reviewed data from comparable sites as well as datasets of transit-oriented development travel patterns.

<u>Fehr & Peers TOD Trip Generation Survey</u>

In 2006, Fehr & Peers surveyed two transit-oriented developments (TODs) adjacent to BART stations as well as a two-block neighborhood within ½ mile of the MacArthur BART station to quantify the differences between standard ITE trip generation rates and those for transit-oriented developments. The sites that were surveyed are described below:

- **La Terrazza Apartments** is a 153-unit apartment complex located at 7800 El Camino Real in Colma, CA, 0.1 miles from the Colma BART station in San Mateo County. The apartment complex is positioned to the east of the Colma BART station and sits atop a

residential parking garage and a 1,095 sq. ft. Subway sandwich shop. Vehicle access to the parking garage is located on El Camino Real and there is direct pedestrian access to the east side of the Colma BART station, via the station transit mall, located on D Street. At the time of the trip generation observations, 110 apartments (72 percent) were occupied.

- **Park Regency Apartments** is an 892-unit apartment complex located at 3128 Oak Road in Walnut Creek, CA, 0.2 miles from the Pleasant Hill BART station in Contra Costa County. The apartment complex is situated to the north of the Pleasant Hill BART station and has both underground and on-street parking available for residents. The apartment complex has three gated vehicle and pedestrian access points. Two of the access points are located on Oak Road and the third access point is located on Las Juntas Road. Pedestrians that use the Las Juntas Road access point can cross the road and enter the northern parking lot at the Pleasant Hill BART station. The two vehicle driveways on Oak Road are shared with a commercial development that is adjacent to the apartment complex. The commercial development includes a Subway sandwich shop, a local deli, a 7-11 convenience store, a dry cleaner, a tanning salon, and a Taco Bell restaurant. Trips to the retail were counted separately from trips to the residential units. At the time of the trip generation observations, 746 apartments (84 percent) were occupied.

- **36th and 37th Street** is a two-block section of the Mosswood neighborhood located between Telegraph Avenue and Webster Avenue in Oakland, CA, near the MacArthur BART station in Alameda County. This section of Mosswood has 54 single-family dwelling units and 149 multi-family dwelling units (townhouses and condominiums) and is located approximately 0.35 miles away from the MacArthur BART station. There are four vehicle and pedestrian access points at the intersections of 36th and 37th Streets with Telegraph Avenue and Webster Street. At the time of the trip generation observations, all of the residences appeared to be occupied.

Peak period traffic counts (7:00 to 9:00 AM and 4:00 to 6:00 PM) of vehicle, pedestrian, bicycle, and transit use were conducted at the developments' access points during typical weekdays in May 2006, when local schools were in session. The count data is shown in Table 1. The weather was sunny or partly sunny during all survey days. Note that transit trips were not recorded for the 36th and 37th Street neighborhood because there are no AC Transit or BART stops within the neighborhood boundaries. Any transit trips were most likely recorded as pedestrian trips, given there are AC Transit stops located along Telegraph Avenue and the MacArthur BART station is approximately 1/3 of a mile away. Some transit trips were also potentially recorded as vehicle trips that began in the neighborhood and ended in the MacArthur BART station parking lot.

As shown in Table 1, the vehicle mode share for the three projects was fairly consistent in the AM peak hour at between 63 percent and 75 percent of all trips, and varied more widely in the PM peak hour, from 64 to 83 percent of all trips. The transit mode share for the two apartment buildings was fairly consistent at between 20 and 28 percent in the AM peak hour and 10 to 11 percent in the PM peak hour.

FEHR & PEERS
TRANSPORTATION CONSULTANTS

TABLE 1
SURVYED SITES: TRIP GENERATION DATA

Trips	Vehicles			Transit (BART)/Bicycles[1]			Pedestrians			Total		
	In	Out	Total	In	Out	Total	In	Out	Total	In	Out	Total
La Terraza Apartments												
AM Peak Hour	4	26	30	0	12	12	0	0	0	4	38	42
PM Peak Hour	25	18	43	2	3	5	3	0	3	30	21	51
Trip % of Total												
AM Peak Hour	10%	62%	72%	0%	28%	28%	0%	0%	0%	10%	90%	100%
PM Peak Hour	49%	34%	83%	4%	6%	11%	6%	0%	6%	60%	40%	100%
Park Regency Apartments												
AM Peak Hour	52	193	245	1	70	71	10	7	17	63	270	333
PM Peak Hour	172	85	257	34	1	35	41	40	81	247	126	373
Trip % of Total												
AM Peak Hour	16%	59%	75%	0%	20%	20%	2%	2%	5%	18%	82%	100%
PM Peak Hour	47%	22%	69%	10%	0%	10%	10%	10%	20%	67%	33%	100%
36th & 37th Streets (Single-Family Housing and Condominiums/Townhomes)												
AM Peak Hour	30	49	79	0	4	4	11	32	43	41	85	126
PM Peak Hour	49	56	105	5	3	8	30	22	52	84	81	165
Trip % of Total												
AM Peak Hour	24%	39%	63%	0%	3%	3%	8%	26%	34%	32%	68%	100%
PM Peak Hour	30%	35%	64%	2%	1%	4%	19%	14%	32%	51%	49%	100%

[1] Transit trips for the apartment complexes; bicycle trips for the 36th & 37th Street residences.
Source: Fehr & Peers, 2006.

The observed vehicle trips were compared to trips estimated based on trip generation data published in *Trip Generation, 7th Edition* (Institute of Transportation Engineers, 2004), consistent with the method presented in *Trip Generation Handbook 2nd Edition* (ITE, 2004). The ITE trip generation is based on data collected at sites across the country, most of which are in suburban settings with minimal transit access, where all trips are made with private vehicles. As shown in Table 2, the observed vehicle trip generation is between 33 percent and 48 percent lower than the ITE -based vehicle trip generation during the AM peak hour and between 28 percent and 45 percent lower than the ITE -based vehicle trip generation during the PM peak hour. On average, vehicle trips at the surveyed sites are 38 percent lower than the vehicle trips estimated by the ITE method. Considering that the ITE rates are based on typical suburban developments with minimal transit access and that the surveyed sites are well served by transit, it is reasonable to assume that TODs would generate 38 percent fewer trips.

FEHR & PEERS
TRANSPORTATION CONSULTANTS

TABLE 2
SURVYED SITES TRIP GENERATION VS ITE DATA

Site	Observed Trip Generation[1]		ITE-Based Estimated Trip Generation[2]		Percent Difference[3]	
	AM Peak Hour	PM Peak Hour	AM Peak Hour	PM Peak Hour	AM Peak Hour	PM Peak Hour
La Terraza Apartments	30	43	58	78	-48%	-45%
Park Regency Apartments	245	257	371	430	-34%	-40%
36th & 37th Streets	79	105	118[4]	145[4]	-33%	-28%
Average Difference					***-38%***	***-38%***

[1] Based on surveys conducted by Fehr & Peers in May 2006 and detailed in Table 1.

[2] Trip generation estimated based on ITE *Trip Generation Handbook, 2nd Edition* method and *Trip Generation, 7th Edition* data.

[3] Calculated as 1-(surveyed trips/ITE-based trip generation).

[4] Sum of trips based on ITE equations for Single Family Detached Housing (Land Use 210) for 54 units and Residential Condominium/Townhouse (Land Use 230) for 149 units.

Source: Fehr & Peers, 2007.

Dowling Associates TOD Trip Generation Memorandum

Fehr & Peers reviewed the *Recommended Trip Generation Adjustments for Transit-Oriented Developments in Oakland* memorandum prepared by Dowling Associates and dated April 6, 2006. Dowling Associates uses Bay Area Travel Survey (BATS) 2000 data for TODs at the Hayward and Pleasant Hill BART Stations as well as Census Transportation Planning Package (CTPP) data on journey to work mode share for residents adjacent to the El Cerrito del Norte BART station to determine appropriate adjustments to ITE trip generation rates. The El Cerrito del Norte BART station is at or near parking capacity, has basic pedestrian facilities, and is surrounded by typical suburban development with retail uses setback from the street, and surrounded by parking lots.

Based on their research, Dowling recommends using the ITE regression equation for condominiums and reducing the trip generation by 40 percent for a development at a BART station where there is off-street parking available for residents.

BATS 2000 Data

The Bay Area Travel Survey collects data about travel patterns and demographics for nearly 35,000 persons, including those living within 1 mile and ½ mile of various transit operators, and persons not living near transit. Fehr & Peers reviewed the BATS 2000 data on trip patterns for persons living within ½ mile of BART stations. As shown in Table 3, the transit mode share for households living within ½ mile of BART was close to 36 percent. This is consistent with the findings from Fehr & Peers' trip generation surveys and the Dowling memorandum. While the BATS data is not reported separately for households adjacent to BART, it is likely that their transit mode share would be higher than those living ½ mile from BART.

FEHR & PEERS
TRANSPORTATION CONSULTANTS

TABLE 3
BATS 2000 DATA:
HOME-BASED WORK MODE SHARE FOR HOUSEHOLDS WITHIN ½ MILE OF BART

Mode	Share
In-Vehicle Person	48.3%
Vehicle Driver	41.9%
Vehicle Passenger	6.4%
Total Transit	***35.5%***
BART	22.5%
Other Transit	13.0%
Bicycle	3.5%
Walk	9.8%
Other	3.0%

Source: *Characteristics of Rail and Ferry Station Area Residents in the San Francisco Bay Area: Evidence from the 2000 Bay Area Travel Survey*, Appendix P, Table P2, Metropolitan Transportation Commission, September, 2006.

The analysis completed by Dowling Associates and the BATS 2000 data are consistent with our recommendation to apply a 38 percent reduction to the residential vehicle trip generation (using the ITE Condominium regression equations) for the MacArthur BART Transit Village.

Other Factors

Vehicle Ownership

Based on the latest project description received in June 2007, the proposed project would provide between 700 and 775 residential, retail and community use parking spaces. Research on travel patterns in TODs finds that households with fewer vehicles have higher transit ridership than those with more vehicles. For example, as cited in the Dowling memorandum, Cervero and Duncan found that for residents who live and work within ½ mile of a rail station, the probability of commuting by rail was 85 percent for households with zero vehicles, 44 percent for households with one vehicle, 25 percent for households with two vehicles, and 13 percent for households with three vehicles.

Similarly, the BATS 2000 data for residents living within ¼ mile of the El Cerrito del Norte BART station (summarized in the Dowling memorandum and Table 4 below) shows that the percentage of residents commuting by transit drops from 70 percent for households with zero vehicles, to 33 percent for households with one vehicle, to 21 percent for households with two vehicles, to 13 percent for households with 3 vehicles. Assuming that the number of off-street parking spaces provided for each unit influences vehicle availability, the relatively low ratio of 1.0 parking spaces per unit for the proposed residential units should encourage transit ridership.

FEHR & PEERS
TRANSPORTATION CONSULTANTS

TABLE 4
PERCENTAGE COMMUTE BY TRANSIT,
HOUSING LOCATION AND VEHICLES AVAILABILITY

Number of Vehicles Available	Reside within ¼ mile of BART station	Reside between ¼ and ½ mile of BART Station
0	70%	45%
1	33%	21%
2	21%	9%
3	13%	10%
4+	16%	9%

Source: *Recommended Trip Generation Adjustments for Transit-Oriented Developments in Oakland*, Dowling Associates memorandum to Natalie Fay, City of Oakland, April 6, 2006 (provided by Natalie Fay)

Household Income

Lower-income households tend to have higher transit use than higher-income households, generally due to lower vehicle ownership rates. Therefore, residents of the 113 below-market units in the proposed project may have higher transit use (and lower vehicle trip generation) than assumed.

Retail Trips

The proposed MacArthur BART Transit Village includes up to 44,000 square feet of commercial space, which most likely be neighborhood-serving retail space. Although up to 10,000 square-feet of commercial space may be converted to live/work units, this analysis assumes that all commercial space would be used as retail space.

Because the retail space is relatively small and intended to serve primarily BART commuters and nearby residents, we have used the ITE trip generation rates for Specialty Retail, rather than Shopping Center. Based on Oakland's TIA guidelines, it is appropriate to use Specialty Retail for 25,000 square feet or more of retail, but a pass-by reduction cannot be taken. Because there is no AM data for Specialty Retail, we used the PM rate and reversed the in/out split. This is likely conservative, as the retail may not be open during the AM peak hour.

Literature on mode share for trips to transit-oriented retail locations shows a range from five percent to over twenty percent transit share for shoppers and up to forty percent transit share for retail employees, depending on the size of the retail center, its location, the transit service, and parking availability. Given that the retail proposed for the MacArthur BART Transit Village is relatively small and neighborhood-serving, most of the trips are likely to come from BART patrons and residents of the adjacent housing, who will likely walk or combine the trip with their commute trip. To be conservative, we have applied a five percent transit reduction to the ITE rates. This is consistent with the low end of the TOD research on retail trips.

FEHR & PEERS
TRANSPORTATION CONSULTANTS

BART Parking Lot Trips

The proposed MacArthur BART Transit Village project includes removing approximately 300 of the existing 600 parking spaces in the BART lot. This reduction will likely have an effect on peak hour vehicle trips, and travel patterns may change in several ways. Patrons that currently drive to the station and park may shift to a variety of modes, including local bus, walk, or bicycle. Others may carpool or be dropped off at the station. Others may continue to drive and park on-street or in other lots in the area. Others may drive to a different BART station, or drive to their end destination rather than take BART.

As described in the *MacArthur BART Station Access Plan Existing Conditions Report*, the daily fee spaces in the lot currently fill by 7:30 AM. Between half and three-quarters of the 154 monthly reserved spaces are filled by 9:00 AM, leaving between 38 and 77 spaces available. It is likely that with fewer BART parking spaces, the parking lot will fill earlier. Based on recent traffic counts, the AM peak hour for traffic is 8:00 to 9:00 AM. Therefore, any change in vehicle trips to the parking lot in the morning will most likely occur before the peak hour.

Based on recent traffic counts adjacent to the site, the PM peak hour occurs between 5:00 and 6:00 PM. During this hour, approximately 430 vehicles enter and exit the BART parking lot (138 enter, 294 exit). With the reduction in parking spaces, the lot may empty earlier in the evening, if BART patrons who arrive earlier to park would also leave earlier. Therefore, some of the current exits in the PM peak hour may shift to earlier times and reduce the the PM peak hour trip generation. However, to be conservative, we assume that BART patrons currently exiting the lot during the PM peak hour will continue to do so. We assume that patrons entering the lot during the PM peak hour would also continue to do so. We have made no adjustment to the trip generation for additional or reduced trips to and from the BART parking lot during peak hours.

The proposed project may include a Residential Permit Parking (RPP) program for the area within ¼ mile of the BART station. Under the RPP program, residents would receive a permit to park on-street, but non-residents would not be able to park on-street for more than two hours. The RPP program would therefore reduce the amount of on-street parking available to BART commuters. According to the *MacArthur BART Station Neighborhood Street Parking and Transit Analysis* (Nelson\Nygaard, May 2006), approximately 470 vehicles enter the proposed RPP area between 6:30 and 9:00 AM to park. This includes BART commuters as well as local workers and other non-residents. With the RPP program, BART commuters who currently park on-street would either park outside the RPP area and walk to the station, shift to transit, bicycle, or carpool, get dropped off at the station, drive to another BART station, or drive to their end destination instead of taking BART. Depending on the magnitude of these mode shifts, up to 470 fewer vehicles may enter the project area in the morning.

If the program were designed to allow non-residents to purchase a permit, most BART commuters who currently park on-street would likely continue to do so, and some BART commuters who currently park in the BART lot would shift to parking on-street. If the RPP were not implemented, BART commuters who currently park on-street would continue to do so, and some BART commuters who currently park in the BART lot would shift to parking on-street. According to the Nelson\Nygaard analysis, the maximum parking occupancy within a ¼ mile radius of the station is 65 percent, which occurs at 4:00 PM. Therefore, at least 35 percent of the on-street parking (or about 430 spaces) are available during the day. Given the uncertainty of shifts in travel patterns due to the RPP program, we conservatively assume no net change in trip generation.

FEHR & PEERS
TRANSPORTATION CONSULTANTS

Trip Generation Summary

Table 5 summarizes the proposed project's vehicle trip generation. Based on the transit reductions and parking lot trip assumptions described above, the project would generate approximately 4,265 new daily vehicle trips, 325 AM peak hour vehicle trips, and 358 PM peak hour vehicle trips.

TABLE 5
PROJECT VEHICLE TRIP GENERATION

Land Use	ITE Code	Amount	Daily	AM Peak Hour			PM Peak Hour		
				In	Out	Total	In	Out	Total
Condominium[1]	230	675 DU	3,254	40	197	237	193	95	288
Residential Transit Reduction[2]		Daily19% Peak Hr. 38%	-618	-15	-75	-90	-73	-36	-109
Total Residential Trips			***2,636***	***25***	***122***	***147***	***120***	***59***	***179***
Retail [3]	814	44 ksf	1,950	67	52	119	52	67	119
Retail Transit Reduction[4]		5%	-98	-3	-3	-6	-3	-3	-6
Total Retail Trips			***1,852***	***64***	***49***	***113***	***49***	***64***	***113***
Community Space [5]	565	5 ksf	396	34	30	64	31	35	66
BART Parking lot [6]		-300 spaces	0	0	0	0	0	0	0
Total Trip Generation			**4,884**	**123**	**201**	**324**	**200**	**158**	**358**

Notes: du = dwelling unit; ksf = 1,000 square feet.

[1] Trip generation based on the regression equations for Residential Condominium/Townhouse (Land Use 230) in the Institute of Transportation Engineers' (ITE) *Trip Generation* (7th Edition), as presented below.
Daily Equation: Ln (T) = 0.85 Ln(X) + 2.55
AM Equation: Ln (T) = 0.80 Ln(X) + 0.26 (inbound = 17%, outbound = 83%)
PM Equation: Ln (T) = 0.82 Ln(X) + 0.32 (inbound = 67%, outbound = 33%)
Where: T = trip ends, Ln = natural logarithm, and X = number of dwelling units

[2] Residential transit reduction based on trip generation surveys at Bay Area TODs adjacent to BART stations; confirmed by data presented in *Recommended Trip Generation Adjustments for Transit-Oriented Developments in Oakland (*Dowling Inc., April 2006*)* as well as Bay Area Transportation Surveys (BATS) 2000 data for households within ½ mile of BART stations. Transit reduction for daily trip generation is lower to account for lower transit mode share for non-work trips.

[3] Daily and PM trip generation based on rates for Specialty Retail (Land Use 814) in the ITE *Trip Generation* (7th Edition) as presented below.
Daily Rate: (T) = 44.32 (X)
PM Rate: (T) = 2.71 (X) (inbound = 44%, outbound = 56%)
Where: T = trip ends and X = 1,000 square feet
AM trip generation based on PM trip rate, with reversed inbound/outbound splits.

[4] Retail transit reduction based on TOD literature on retail trips, including *Travel Characteristics of Transit-Oriented Development in California (*Lund, Cervero, and Wilson, 2004*)*, and *Ridership Impacts of Transit-Focused Development in California (*Cervero, 1993)

[5] Trip generation based on average rates for Day Care Center (Land Use 565) in the ITE *Trip Generation* (7th Edition) as presented below.
Daily Rate: (T) = 79.26 (X)
AM Rate: (T) = 12.79 (X) (inbound = 53%, outbound = 47%)
PM Rate: (T) = 13.18 (X) (inbound = 47%, outbound = 53%)
Where: T = trip ends and X = 1,000 square feet

[6] The project includes removing approximately 300 of the existing 618 parking spaces in the BART lot. In the AM peak hour, any change in trips to the parking lot will most likely continue to occur before the peak hour. To be conservative, we assume that BART patrons currently entering and exiting the lot in the PM peak hour will continue to do so.

FEHR & PEERS
TRANSPORTATION CONSULTANTS

Source: Fehr & Peers, 2007.

ALTERNATE TRIP GENERATION

Table 6 presents an alternate method for estimating trip generation and compares it to the original trip generation presented in Table 5.

The key differences are as follows:

- The residential trip generation reduction is reduced from 38 percent in both the AM and PM peak hours to 33 percent in the AM peak hour and 28 percent in the PM peak hour.
- The retail trip generation is based on the ITE regression equation for Shopping Center rather than Specialty Retail. A pass-by reduction of 56 percent is applied for the PM peak hour. This is based on data in Table 5.4 of the ITE *Trip Generation Handbook*, which shows an average pass-by percentage of 56 percent for shopping centers of 50,000 square feet or less). The daily pass-by rate is assumed to be 28 percent, or about half the PM rate.
- A trip reduction was taken to account for the loss of 300 of the existing 600 spaces in the BART parking lot. No reduction was taken for the AM peak hour because the daily fee spaces fill before the AM peak hour. The PM peak hour and daily reductions are based on the existing number of trips to and from the lot, available on-street parking in the surrounding neighborhood, and estimated shifts to pick-up/drop-off and other modes. The BART parking lot currently generates about 380 trips during the PM peak hour and 1,350 daily trips. There are approximately 140 non-restricted parking spaces available in the neighborhood within walking distance of the station at 9:00 AM that BART parkers could potentially use. Pick-up and drop off trips currently represent about 17 percent of non-drive-alone access to the station. It is estimated that reducing the BART parking supply by 50 percent would result in 50 percent of the current vehicle trips to continue using the BART lot, 23 percent to shift to parking on the surrounding neighborhood streets, 9 percent to shift to pick-up/drop offs, and 18 percent to shift to other modes or not use the MacArthur BART Station. This 18 percent represents the expected reduction in BART parking lot trip generation.

As shown in Table 6, the alternate trip generation is approximately 750 trips higher than the original trip generation on a daily basis, and about six trips lower in the AM peak hour and about 7 trips higher during the PM peak hour. Since the AM and PM peak hour trip generation is about the same as the original trip generation and the traffic analysis will be completed for the AM and PM peak hours, we intend to use the original trip generation for the EIR analysis.

Please contact us with any questions or comments.

FEHR & PEERS
TRANSPORTATION CONSULTANTS

TABLE 6
ALTERNATIVE PROJECT VEHICLE TRIP GENERATION

Land Use	ITE Code	Amount	Daily	AM Peak Hour			PM Peak Hour		
				In	Out	Total	In	Out	Total
Condominium[1]	230	675 DU	3,254	40	197	237	193	95	288
Residential Transit Reduction[2]		19% Daily, 33% AM, 28% PM	-618	-13	-65	-79	-54	-27	-81
Total Residential Trips			***2,638***	***27***	***132***	***159***	***139***	***68***	***207***
Retail [3]	814	44 ksf	3,983	58	37	96	175	189	364
Retail Pass-By Reduction[4]		28% Daily 56% PM	-1,115	0	0	0	-8	-06	-04
Total Retail Trips			***2868***	***58***	***37***	***96***	***77***	***83***	***160***
Community Space [5]	565	5 ksf	396	34	30	64	31	35	66
BART Parking lot [6]		-300 spaces	-263	0	0	0	-13	-55	-69
Total Trip Generation			***5,636***	***119***	***200***	***319***	***233***	***131***	***365***
Total Original Trip Generation			***4,884***	***123***	***202***	***325***	***200***	***158***	***358***
Difference			***752***	***-3***	***-3***	***-6***	***33***	***-27***	***7***

Notes: du = dwelling unit; ksf = 1,000 square feet.

[1] Trip generation based on the regression equations for Residential Condominium/Townhouse (Land Use 230) in the Institute of Transportation Engineers' (ITE) *Trip Generation* (7th Edition), as presented below.

Daily Equation: Ln (T) = 0.85 Ln(X) + 2.55
AM Equation: Ln (T) = 0.80 Ln(X) + 0.26 (inbound = 17%, outbound = 83%)
PM Equation: Ln (T) = 0.82 Ln(X) + 0.32 (inbound = 67%, outbound = 33%)
Where: T = trip ends, Ln = natural logarithm, and X = number of dwelling units

[2] Residential transit reduction based on trip generation surveys at Bay Area TODs adjacent to BART stations; confirmed by data presented in *Recommended Trip Generation Adjustments for Transit-Oriented Developments in Oakland (*Dowling Inc., April 2006*)* as well as Bay Area Transportation Surveys (BATS) 2000 data for households within ½ mile of BART stations.

[3] Daily and PM trip generation based on the equation for Shopping Center (Land Use 820) in the Institute of Transportation Engineers' (ITE) *Trip Generation* (7th Edition), as presented below.

Daily Equation: Ln (T) = 0.65 Ln(X) + 5.83
AM Equation: Ln (T) = 0.60 Ln(X) + 2.29 (inbound = 61%, outbound = 39%)
PM Equation: Ln (T) = 0.66 Ln(X) + 3.4 (inbound = 48%, outbound = 52%)
Where: T = trip ends, Ln = natural logarithm, and X = Thousand square feet of retail space

[4] Pass-By Reduction based on Table 5.4 in the ITE *Trip Generation Handbook*, which shows an average pass-by percentage of 56 percent for shopping centers of 50,000 square feet or less. The daily pass-by rate is assumed to be about half the PM rate.

[5] Trip generation based on the average rates for Day Care Center (Land Use 565) in the ITE *Trip Generation* (7th Edition), as presented below.

Daily Rate: (T) = 79.26 (X)
AM Rate: (T) = 12.79 (X) (inbound = 53%, outbound = 47%)
PM Rate: (T) = 13.18 (X) (inbound = 47%, outbound = 53%)
Where: T = trip ends and X = 1,000 square feet

[6] The project includes removing approximately 300 of the existing 600 parking spaces in the BART lot. In the AM peak hour, any change in trips to the parking lot will most likely continue to occur before the peak hour. To be conservative, we assume that BART patrons currently entering and exiting the lot in the PM peak hour will continue to do so.

Source: Fehr & Peers, 2007.

APPENDIX D:
EXISTING PLUS PROJECT CONDITIONS INTERSECTION LEVEL OF SERVICE CALCULATION WORKSHEETS

Movement	EBL	EBT	EBR	WBL	WBT	WBR	NBL	NBT	NBR	SBL	SBT	SBR
Lane Configurations												
Ideal Flow (vphpl)	1900	1900	1900	1900	1900	1900	1900	1900	1900	1900	1900	1900
Lane Width	12	12	12	12	12	12	16	16	16	16	16	16
Total Lost time (s)	4.0	4.0		4.0	4.0		2.0	2.0		2.0	2.0	
Lane Util. Factor	1.00	0.91		1.00	0.91		1.00	1.00		1.00	1.00	
Frpb, ped/bikes	1.00	0.99		1.00	0.99		1.00	0.99		1.00	0.98	
Flpb, ped/bikes	1.00	1.00		1.00	1.00		1.00	1.00		0.99	1.00	
Frt	1.00	0.98		1.00	0.98		1.00	0.98		1.00	0.93	
Flt Protected	0.95	1.00		0.95	1.00		0.95	1.00		0.95	1.00	
Satd. Flow (prot)	1770	4922		1770	4965		2006	2048		1984	1926	
Flt Permitted	0.95	1.00		0.95	1.00		0.11	1.00		0.46	1.00	
Satd. Flow (perm)	1770	4922		1770	4965		222	2048		968	1926	
Volume (vph)	288	907	175	65	1219	165	206	268	50	146	277	246
Peak-hour factor, PHF	0.95	0.95	0.95	0.95	0.95	0.95	0.95	0.95	0.95	0.95	0.95	0.95
Adj. Flow (vph)	303	955	184	68	1283	174	217	282	53	154	292	259
RTOR Reduction (vph)	0	20	0	0	14	0	0	6	0	0	28	0
Lane Group Flow (vph)	303	1119	0	68	1443	0	217	329	0	154	523	0
Confl. Peds. (#/hr)			10	10		10	10		10	10		10
Turn Type	Prot			Prot			pm+pt			Perm		
Protected Phases	7	4		3	8		5	2			6	
Permitted Phases							2			6		
Actuated Green, G (s)	17.0	56.4		8.6	48.0		44.5	44.5		35.5	35.5	
Effective Green, g (s)	17.0	56.4		8.6	48.0		45.0	45.0		36.0	36.0	
Actuated g/C Ratio	0.14	0.47		0.07	0.40		0.38	0.38		0.30	0.30	
Clearance Time (s)	4.0	4.0		4.0	4.0		4.0	2.5		2.5	2.5	
Vehicle Extension (s)	3.0	3.0		3.0	3.0		3.0	3.0		3.0	3.0	
Lane Grp Cap (vph)	251	2313		127	1986		187	768		290	578	
v/s Ratio Prot	c0.17	0.23		0.04	c0.29		c0.07	0.16			c0.27	
v/s Ratio Perm							0.37			0.16		
v/c Ratio	1.21	0.48		0.54	0.73		1.16	0.43		0.53	0.90	
Uniform Delay, d1	51.5	21.8		53.8	30.5		33.9	27.9		35.0	40.4	
Progression Factor	1.00	1.00		1.00	1.00		1.00	1.00		1.00	1.00	
Incremental Delay, d2	124.5	0.7		4.3	2.4		115.7	0.4		1.9	17.6	
Delay (s)	176.0	22.5		58.1	32.8		149.5	28.3		36.8	58.0	
Level of Service	F	C		E	C		F	C		D	E	
Approach Delay (s)		54.8			33.9			76.0			53.4	
Approach LOS		D			C			E			D	

Intersection Summary			
HCM Average Control Delay	49.8	HCM Level of Service	D
HCM Volume to Capacity ratio	0.88		
Actuated Cycle Length (s)	120.0	Sum of lost time (s)	12.0
Intersection Capacity Utilization	98.2%	ICU Level of Service	F
Analysis Period (min)	15		

c Critical Lane Group

Movement	EBL	EBT	EBR	WBL	WBT	WBR	NBL	NBT	NBR	SBL	SBT	SBR
Lane Configurations												
Ideal Flow (vphpl)	1900	1900	1900	1900	1900	1900	1900	1900	1900	1900	1900	1900
Total Lost time (s)		4.0		4.0	4.0			4.0		4.0	4.0	
Lane Util. Factor		1.00		0.95	0.95			0.95		1.00	0.95	
Frpb, ped/bikes		1.00		1.00	0.99			0.99		1.00	0.96	
Flpb, ped/bikes		1.00		1.00	1.00			1.00		1.00	1.00	
Frt		0.94		1.00	0.92			0.97		1.00	0.95	
Flt Protected		0.97		0.95	1.00			1.00		0.95	1.00	
Satd. Flow (prot)		1696		1681	1607			3406		1770	3203	
Flt Permitted		0.80		0.75	1.00			0.94		0.95	1.00	
Satd. Flow (perm)		1402		1321	1607			3215		1770	3203	
Volume (vph)	8	0	7	113	95	119	10	984	230	72	663	358
Peak-hour factor, PHF	0.93	0.93	0.93	0.93	0.93	0.93	0.93	0.93	0.93	0.93	0.93	0.93
Adj. Flow (vph)	9	0	8	122	102	128	11	1058	247	77	713	385
RTOR Reduction (vph)	0	8	0	0	61	0	0	15	0	0	49	0
Lane Group Flow (vph)	0	9	0	122	169	0	0	1301	0	77	1049	0
Confl. Peds. (#/hr)	4					4	44		12	12		44
Turn Type	Perm			Perm			Perm			Prot		
Protected Phases		7			8			2		1	6	
Permitted Phases	7			8			2					
Actuated Green, G (s)		3.3		13.0	13.0			48.7		7.0	60.2	
Effective Green, g (s)		3.8		13.5	13.5			49.2		7.5	60.7	
Actuated g/C Ratio		0.04		0.15	0.15			0.55		0.08	0.67	
Clearance Time (s)		4.5		4.5	4.5			4.5		4.5	4.5	
Vehicle Extension (s)		2.0		2.0	2.0			2.0		2.0	2.0	
Lane Grp Cap (vph)		59		198	241			1758		148	2160	
v/s Ratio Prot										0.04	c0.33	
v/s Ratio Perm		c0.01		0.09	0.11			c0.40				
v/c Ratio		0.16		0.62	0.70			0.74		0.52	0.49	
Uniform Delay, d1		41.6		35.8	36.3			15.5		39.5	7.1	
Progression Factor		1.00		1.00	1.00			1.03		1.00	1.00	
Incremental Delay, d2		0.5		4.0	7.3			1.5		1.5	0.8	
Delay (s)		42.0		39.8	43.6			17.6		41.0	7.9	
Level of Service		D		D	D			B		D	A	
Approach Delay (s)		42.0			42.3			17.6			10.1	
Approach LOS		D			D			B			B	

Intersection Summary			
HCM Average Control Delay	17.7	HCM Level of Service	B
HCM Volume to Capacity ratio	0.69		
Actuated Cycle Length (s)	90.0	Sum of lost time (s)	16.0
Intersection Capacity Utilization	77.7%	ICU Level of Service	D
Analysis Period (min)	15		

c Critical Lane Group

Movement	EBL	EBT	EBR	WBL	WBT	WBR	NBL	NBT	NBR	SBL	SBT	SBR
Lane Configurations												
Ideal Flow (vphpl)	1900	1900	1900	1900	1900	1900	1900	1900	1900	1900	1900	1900
Total Lost time (s)	4.0	4.0		4.0	4.0		4.0	4.0		4.0	4.0	
Lane Util. Factor	0.97	0.95		1.00	0.95		1.00	0.95		1.00	0.95	
Frpb, ped/bikes	1.00	0.99		1.00	1.00		1.00	0.99		1.00	0.98	
Flpb, ped/bikes	1.00	1.00		1.00	1.00		1.00	1.00		1.00	1.00	
Frt	1.00	0.98		1.00	0.96		1.00	0.98		1.00	0.97	
Flt Protected	0.95	1.00		0.95	1.00		0.95	1.00		0.95	1.00	
Satd. Flow (prot)	3433	3432		1770	3398		1770	3441		1770	3353	
Flt Permitted	0.95	1.00		0.95	1.00		0.95	1.00		0.95	1.00	
Satd. Flow (perm)	3433	3432		1770	3398		1770	3441		1770	3353	
Volume (vph)	450	533	86	101	677	209	107	591	99	140	509	143
Peak-hour factor, PHF	0.96	0.96	0.96	0.96	0.96	0.96	0.96	0.96	0.96	0.96	0.96	0.96
Adj. Flow (vph)	469	555	90	105	705	218	111	616	103	146	530	149
RTOR Reduction (vph)	0	14	0	0	32	0	0	15	0	0	27	0
Lane Group Flow (vph)	469	631	0	105	891	0	111	704	0	146	652	0
Confl. Peds. (#/hr)	6		24	24		6	36		28	28		36
Turn Type	Prot			Prot			Prot			Prot		
Protected Phases	7	4		3	8		5	2		1	6	
Permitted Phases												
Actuated Green, G (s)	13.0	30.6		7.9	25.5		8.0	24.4		10.1	26.5	
Effective Green, g (s)	12.5	31.6		7.4	26.5		7.5	25.4		9.6	27.5	
Actuated g/C Ratio	0.14	0.35		0.08	0.29		0.08	0.28		0.11	0.31	
Clearance Time (s)	3.5	5.0		3.5	5.0		3.5	5.0		3.5	5.0	
Vehicle Extension (s)	2.0	2.0		2.0	2.0		2.0	2.0		2.0	2.0	
Lane Grp Cap (vph)	477	1205		146	1001		148	971		189	1025	
v/s Ratio Prot	c0.14	0.18		0.06	c0.26		0.06	c0.20		c0.08	0.19	
v/s Ratio Perm												
v/c Ratio	0.98	0.52		0.72	0.89		0.75	0.72		0.77	0.64	
Uniform Delay, d1	38.6	23.2		40.3	30.4		40.3	29.1		39.1	26.9	
Progression Factor	1.00	1.00		1.00	1.00		1.00	1.00		1.11	0.82	
Incremental Delay, d2	36.5	0.2		13.2	9.5		17.1	4.7		14.5	2.7	
Delay (s)	75.2	23.4		53.4	39.9		57.4	33.9		58.1	24.8	
Level of Service	E	C		D	D		E	C		E	C	
Approach Delay (s)		45.2			41.3			37.0			30.7	
Approach LOS		D			D			D			C	

Intersection Summary			
HCM Average Control Delay	39.2	HCM Level of Service	D
HCM Volume to Capacity ratio	0.83		
Actuated Cycle Length (s)	90.0	Sum of lost time (s)	16.0
Intersection Capacity Utilization	79.3%	ICU Level of Service	D
Analysis Period (min)	15		

c Critical Lane Group

Movement	EBL	EBT	EBR	WBL	WBT	WBR	NBL	NBT	NBR	SBL	SBT	SBR
Lane Configurations												
Ideal Flow (vphpl)	1900	1900	1900	1900	1900	1900	1900	1900	1900	1900	1900	1900
Total Lost time (s)		4.0						4.0		4.0	4.0	
Lane Util. Factor		1.00						0.95		0.97	0.95	
Frt		0.86						0.93		1.00	0.97	
Flt Protected		1.00						1.00		0.95	1.00	
Satd. Flow (prot)		1611						3285		3433	3447	
Flt Permitted		1.00						0.95		0.95	1.00	
Satd. Flow (perm)		1611						3116		3433	3447	
Volume (vph)	0	0	7	0	0	0	7	322	297	1585	269	56
Peak-hour factor, PHF	0.92	0.92	0.92	0.92	0.92	0.92	0.92	0.92	0.92	0.92	0.92	0.92
Adj. Flow (vph)	0	0	8	0	0	0	8	350	323	1723	292	61
RTOR Reduction (vph)	0	8	0	0	0	0	0	24	0	0	0	0
Lane Group Flow (vph)	0	0	0	0	0	0	0	657	0	1723	353	0
Turn Type										Prot		
Protected Phases								2		1	6	
Permitted Phases												
Actuated Green, G (s)		0.0						8.0		29.0	45.0	
Effective Green, g (s)		0.0						8.0		29.0	45.0	
Actuated g/C Ratio		0.00						0.18		0.64	1.00	
Clearance Time (s)								4.0		4.0	2.0	
Lane Grp Cap (vph)		0						554		2212	3447	
v/s Ratio Prot										c0.50	0.10	
v/s Ratio Perm								c0.21				
v/c Ratio		0.00						11.14dr		0.78	0.10	
Uniform Delay, d1		22.5						18.5		5.7	0.0	
Progression Factor		1.00						0.76		1.00	1.00	
Incremental Delay, d2		0.0						100.0		2.8	0.1	
Delay (s)		22.5						114.1		8.5	0.1	
Level of Service		C						F		A	A	
Approach Delay (s)		22.5			0.0			114.1			7.1	
Approach LOS		C			A			F			A	

Intersection Summary			
HCM Average Control Delay	33.5	HCM Level of Service	C
HCM Volume to Capacity ratio	0.87		
Actuated Cycle Length (s)	45.0	Sum of lost time (s)	8.0
Intersection Capacity Utilization	77.2%	ICU Level of Service	D
Analysis Period (min)	15		

dr Defacto Right Lane. Recode with 1 though lane as a right lane.

c Critical Lane Group

Movement	EBL	EBT	EBR	WBL	WBT	WBR	NBL	NBT	NBR	SBL	SBT	SBR
Lane Configurations												
Ideal Flow (vphpl)	1900	1900	1900	1900	1900	1900	1900	1900	1900	1900	1900	1900
Total Lost time (s)		4.0			4.0			4.0			4.0	
Lane Util. Factor		1.00			1.00			0.95			0.95	
Frpb, ped/bikes		0.97			0.96			0.98			0.99	
Flpb, ped/bikes		0.97			0.96			1.00			1.00	
Frt		0.98			0.94			0.98			0.99	
Flt Protected		0.98			0.98			1.00			1.00	
Satd. Flow (prot)		1674			1596			3393			3459	
Flt Permitted		0.80			0.88			0.92			0.88	
Satd. Flow (perm)		1364			1419			3144			3048	
Volume (vph)	69	50	24	51	44	72	24	468	80	41	423	28
Peak-hour factor, PHF	0.90	0.90	0.90	0.90	0.90	0.90	0.90	0.90	0.90	0.90	0.90	0.90
Adj. Flow (vph)	77	56	27	57	49	80	27	520	89	46	470	31
RTOR Reduction (vph)	0	16	0	0	53	0	0	29	0	0	10	0
Lane Group Flow (vph)	0	144	0	0	133	0	0	607	0	0	537	0
Confl. Peds. (#/hr)	100		100	100		100	100		100	100		100
Turn Type	Perm			Perm			Perm			Perm		
Protected Phases		4			8			2			6	
Permitted Phases	4			8			2			6		
Actuated Green, G (s)		15.0			15.0			22.0			22.0	
Effective Green, g (s)		15.0			15.0			22.0			22.0	
Actuated g/C Ratio		0.33			0.33			0.49			0.49	
Clearance Time (s)		4.0			4.0			4.0			4.0	
Lane Grp Cap (vph)		455			473			1537			1490	
v/s Ratio Prot												
v/s Ratio Perm		c0.11			0.09			c0.19			0.18	
v/c Ratio		0.32			0.28			0.39			0.36	
Uniform Delay, d1		11.2			11.0			7.3			7.1	
Progression Factor		1.00			1.00			1.00			1.00	
Incremental Delay, d2		1.8			1.5			0.8			0.7	
Delay (s)		13.0			12.5			8.0			7.8	
Level of Service		B			B			A			A	
Approach Delay (s)		13.0			12.5			8.0			7.8	
Approach LOS		B			B			A			A	

Intersection Summary			
HCM Average Control Delay	9.0	HCM Level of Service	A
HCM Volume to Capacity ratio	0.36		
Actuated Cycle Length (s)	45.0	Sum of lost time (s)	8.0
Intersection Capacity Utilization	60.5%	ICU Level of Service	B
Analysis Period (min)	15		
c Critical Lane Group			

Movement	EBL	EBT	EBR	WBL	WBT	WBR	NBL	NBT	NBR	SBL	SBT	SBR
Lane Configurations												
Ideal Flow (vphpl)	1900	1900	1900	1900	1900	1900	1900	1900	1900	1900	1900	1900
Total Lost time (s)		4.0			4.0			4.0			4.0	
Lane Util. Factor		1.00			1.00			0.95			0.91	
Frpb, ped/bikes		0.96			0.96			0.99			0.98	
Flpb, ped/bikes		0.97			0.98			1.00			1.00	
Frt		0.96			0.96			0.99			0.99	
Flt Protected		0.99			0.99			1.00			1.00	
Satd. Flow (prot)		1641			1658			3456			4887	
Flt Permitted		0.82			0.83			0.91			0.81	
Satd. Flow (perm)		1366			1392			3134			3979	
Volume (vph)	51	74	52	29	57	36	22	943	47	61	991	83
Peak-hour factor, PHF	0.90	0.90	0.90	0.90	0.90	0.90	0.90	0.90	0.90	0.90	0.90	0.90
Adj. Flow (vph)	57	82	58	32	63	40	24	1048	52	68	1101	92
RTOR Reduction (vph)	0	24	0	0	25	0	0	2	0	0	5	0
Lane Group Flow (vph)	0	173	0	0	110	0	0	1122	0	0	1256	0
Confl. Peds. (#/hr)	100		100	100		100	100		100	100		100
Turn Type	Perm			Perm			Perm			Perm		
Protected Phases		4			4			2			6	
Permitted Phases	4			4			2			6		
Actuated Green, G (s)		13.1			13.1			62.9			62.9	
Effective Green, g (s)		13.6			13.6			63.4			63.4	
Actuated g/C Ratio		0.16			0.16			0.75			0.75	
Clearance Time (s)		4.5			4.5			4.5			4.5	
Vehicle Extension (s)		2.0			2.0			2.0			2.0	
Lane Grp Cap (vph)		219			223			2338			2968	
v/s Ratio Prot												
v/s Ratio Perm		c0.13			0.08			c0.36			0.32	
v/c Ratio		0.79			0.49			0.48			0.42	
Uniform Delay, d1		34.3			32.6			4.3			4.0	
Progression Factor		1.00			1.00			1.18			1.00	
Incremental Delay, d2		15.8			0.6			0.7			0.4	
Delay (s)		50.1			33.2			5.8			4.5	
Level of Service		D			C			A			A	
Approach Delay (s)		50.1			33.2			5.8			4.5	
Approach LOS		D			C			A			A	

Intersection Summary			
HCM Average Control Delay	9.7	HCM Level of Service	A
HCM Volume to Capacity ratio	0.53		
Actuated Cycle Length (s)	85.0	Sum of lost time (s)	8.0
Intersection Capacity Utilization	88.6%	ICU Level of Service	E
Analysis Period (min)	15		
c Critical Lane Group			

Movement	EBL	EBT	EBR	WBL	WBT	WBR	NBL	NBT	NBR	SBL	SBT	SBR
Lane Configurations												
Ideal Flow (vphpl)	1900	1900	1900	1900	1900	1900	1900	1900	1900	1900	1900	1900
Total Lost time (s)	4.0	4.0		4.0	4.0		4.0	4.0		4.0	4.0	
Lane Util. Factor	1.00	0.95		1.00	0.95		1.00	1.00		1.00	1.00	
Frpb, ped/bikes	1.00	1.00		1.00	0.99		1.00	0.99		1.00	1.00	
Flpb, ped/bikes	0.98	1.00		0.99	1.00		1.00	1.00		0.98	1.00	
Frt	1.00	0.98		1.00	0.99		1.00	0.98		1.00	0.99	
Flt Protected	0.95	1.00		0.95	1.00		0.95	1.00		0.95	1.00	
Satd. Flow (prot)	1731	3475		1757	3471		1766	1813		1734	1841	
Flt Permitted	0.32	1.00		0.47	1.00		0.62	1.00		0.63	1.00	
Satd. Flow (perm)	574	3475		862	3471		1145	1813		1148	1841	
Volume (vph)	19	300	35	28	454	43	82	160	26	88	187	15
Peak-hour factor, PHF	0.91	0.91	0.91	0.91	0.91	0.91	0.91	0.91	0.91	0.91	0.91	0.91
Adj. Flow (vph)	21	330	38	31	499	47	90	176	29	97	205	16
RTOR Reduction (vph)	0	11	0	0	9	0	0	7	0	0	3	0
Lane Group Flow (vph)	21	357	0	31	537	0	90	198	0	97	218	0
Confl. Peds. (#/hr)	30		12	12		30	6		54	54		6
Turn Type	Perm			Perm			Perm			Perm		
Protected Phases		4			8			2			6	
Permitted Phases	4			8			2			6		
Actuated Green, G (s)	24.0	24.0		24.0	24.0		49.5	49.5		49.5	49.5	
Effective Green, g (s)	23.0	23.0		23.0	23.0		49.0	49.0		49.0	49.0	
Actuated g/C Ratio	0.29	0.29		0.29	0.29		0.61	0.61		0.61	0.61	
Clearance Time (s)	3.0	3.0		3.0	3.0		3.5	3.5		3.5	3.5	
Lane Grp Cap (vph)	165	999		248	998		701	1110		703	1128	
v/s Ratio Prot		0.10			c0.15			0.11			c0.12	
v/s Ratio Perm	0.04			0.04			0.08			0.08		
v/c Ratio	0.13	0.36		0.12	0.54		0.13	0.18		0.14	0.19	
Uniform Delay, d1	21.1	22.6		21.1	24.0		6.5	6.7		6.6	6.8	
Progression Factor	1.00	1.00		0.91	0.97		1.00	1.00		1.00	1.00	
Incremental Delay, d2	1.6	1.0		1.0	2.0		0.4	0.4		0.4	0.4	
Delay (s)	22.7	23.6		20.1	25.5		6.9	7.1		7.0	7.2	
Level of Service	C	C		C	C		A	A		A	A	
Approach Delay (s)		23.6			25.2			7.0			7.1	
Approach LOS		C			C			A			A	

Intersection Summary			
HCM Average Control Delay	17.8	HCM Level of Service	B
HCM Volume to Capacity ratio	0.30		
Actuated Cycle Length (s)	80.0	Sum of lost time (s)	8.0
Intersection Capacity Utilization	78.1%	ICU Level of Service	D
Analysis Period (min)	15		
c Critical Lane Group			

Movement	EBL	EBT	EBR	WBL	WBT	WBR	NBL	NBT	NBR	SBL	SBT	SBR
Lane Configurations												
Ideal Flow (vphpl)	1900	1900	1900	1900	1900	1900	1900	1900	1900	1900	1900	1900
Total Lost time (s)	4.0	4.0		4.0	4.0			4.0			4.0	
Lane Util. Factor	1.00	0.95		1.00	0.95			0.95			0.95	
Frpb, ped/bikes	1.00	0.99		1.00	1.00			0.99			1.00	
Flpb, ped/bikes	0.99	1.00		0.98	1.00			1.00			1.00	
Frt	1.00	0.98		1.00	0.99			0.97			0.97	
Flt Protected	0.95	1.00		0.95	1.00			0.99			0.99	
Satd. Flow (prot)	1759	3460		1736	3518			3354			3373	
Flt Permitted	0.44	1.00		0.47	1.00			0.85			0.90	
Satd. Flow (perm)	808	3460		852	3518			2882			3055	
Volume (vph)	15	376	48	32	453	16	61	101	45	19	66	25
Peak-hour factor, PHF	0.95	0.95	0.95	0.95	0.95	0.95	0.95	0.95	0.95	0.95	0.95	0.95
Adj. Flow (vph)	16	396	51	34	477	17	64	106	47	20	69	26
RTOR Reduction (vph)	0	12	0	0	3	0	0	28	0	0	15	0
Lane Group Flow (vph)	16	435	0	34	491	0	0	189	0	0	100	0
Confl. Peds. (#/hr)	18		54	54		18	4		18	18		4
Turn Type	Perm			Perm			Perm			Perm		
Protected Phases		4			8			2			6	
Permitted Phases	4			8			2			6		
Actuated Green, G (s)	38.0	38.0		38.0	38.0			32.0			32.0	
Effective Green, g (s)	39.0	39.0		39.0	39.0			33.0			33.0	
Actuated g/C Ratio	0.49	0.49		0.49	0.49			0.41			0.41	
Clearance Time (s)	5.0	5.0		5.0	5.0			5.0			5.0	
Lane Grp Cap (vph)	394	1687		415	1715			1189			1260	
v/s Ratio Prot		0.13			c0.14							
v/s Ratio Perm	0.02			0.04				c0.07			0.03	
v/c Ratio	0.04	0.26		0.08	0.29			0.16			0.08	
Uniform Delay, d1	10.7	12.0		10.9	12.2			14.8			14.3	
Progression Factor	0.91	1.04		1.38	1.43			0.40			1.00	
Incremental Delay, d2	0.2	0.4		0.4	0.4			0.3			0.1	
Delay (s)	10.0	12.9		15.5	17.9			6.2			14.4	
Level of Service	A	B		B	B			A			B	
Approach Delay (s)		12.8			17.8			6.2			14.4	
Approach LOS		B			B			A			B	

Intersection Summary			
HCM Average Control Delay	13.8	HCM Level of Service	B
HCM Volume to Capacity ratio	0.23		
Actuated Cycle Length (s)	80.0	Sum of lost time (s)	8.0
Intersection Capacity Utilization	53.2%	ICU Level of Service	A
Analysis Period (min)	15		
c Critical Lane Group			

Movement	EBL	EBT	EBR	WBL	WBT	WBR	NBL	NBT	NBR	SBL	SBT	SBR
Lane Configurations												
Ideal Flow (vphpl)	1900	1900	1900	1900	1900	1900	1900	1900	1900	1900	1900	1900
Total Lost time (s)	4.0	4.0		4.0	4.0			4.0			4.0	
Lane Util. Factor	1.00	0.95		1.00	0.95			0.95			0.95	
Frpb, ped/bikes	1.00	1.00		1.00	0.99			0.99			1.00	
Flpb, ped/bikes	0.99	1.00		0.98	1.00			1.00			1.00	
Frt	1.00	0.99		1.00	0.97			0.97			0.99	
Flt Protected	0.95	1.00		0.95	1.00			1.00			0.99	
Satd. Flow (prot)	1759	3496		1729	3402			3396			3435	
Flt Permitted	0.41	1.00		0.48	1.00			0.90			0.81	
Satd. Flow (perm)	759	3496		876	3402			3087			2819	
Volume (vph)	31	389	25	89	414	112	30	226	62	71	217	29
Peak-hour factor, PHF	0.96	0.96	0.96	0.96	0.96	0.96	0.96	0.96	0.96	0.96	0.96	0.96
Adj. Flow (vph)	32	405	26	93	431	117	31	235	65	74	226	30
RTOR Reduction (vph)	0	6	0	0	31	0	0	27	0	0	9	0
Lane Group Flow (vph)	32	425	0	93	517	0	0	304	0	0	321	0
Confl. Peds. (#/hr)	13		71	71		13	22		22	22		22
Turn Type	Perm			Perm			Perm			Perm		
Protected Phases		4			8			2			6	
Permitted Phases	4			8			2			6		
Actuated Green, G (s)	41.5	41.5		41.5	41.5			32.0			32.0	
Effective Green, g (s)	41.0	41.0		41.0	41.0			31.0			31.0	
Actuated g/C Ratio	0.51	0.51		0.51	0.51			0.39			0.39	
Clearance Time (s)	3.5	3.5		3.5	3.5			3.0			3.0	
Lane Grp Cap (vph)	389	1792		449	1744			1196			1092	
v/s Ratio Prot		0.12			c0.15							
v/s Ratio Perm	0.04			0.11				0.10			c0.11	
v/c Ratio	0.08	0.24		0.21	0.30			0.25			0.29	
Uniform Delay, d1	9.9	10.8		10.6	11.2			16.6			16.9	
Progression Factor	1.33	1.43		1.00	1.00			0.70			1.00	
Incremental Delay, d2	0.4	0.3		1.0	0.4			0.5			0.7	
Delay (s)	13.6	15.8		11.7	11.6			12.2			17.6	
Level of Service	B	B		B	B			B			B	
Approach Delay (s)		15.6			11.6			12.2			17.6	
Approach LOS		B			B			B			B	

Intersection Summary			
HCM Average Control Delay	13.9	HCM Level of Service	B
HCM Volume to Capacity ratio	0.30		
Actuated Cycle Length (s)	80.0	Sum of lost time (s)	8.0
Intersection Capacity Utilization	101.6%	ICU Level of Service	G
Analysis Period (min)	15		
c Critical Lane Group			

Movement	EBT	EBR	WBL	WBT	NBL	NBR
Lane Configurations						
Ideal Flow (vphpl)	1900	1900	1900	1900	1900	1900
Total Lost time (s)	4.0		4.0	4.0	4.0	
Lane Util. Factor	0.95		1.00	0.95	1.00	
Frpb, ped/bikes	0.91		1.00	1.00	1.00	
Flpb, ped/bikes	1.00		1.00	1.00	1.00	
Frt	0.97		1.00	1.00	0.96	
Flt Protected	1.00		0.95	1.00	0.96	
Satd. Flow (prot)	3130		1770	3539	1733	
Flt Permitted	1.00		0.95	1.00	0.96	
Satd. Flow (perm)	3130		1770	3539	1733	
Volume (vph)	432	94	73	501	116	41
Peak-hour factor, PHF	0.91	0.91	0.91	0.91	0.91	0.91
Adj. Flow (vph)	475	103	80	551	127	45
RTOR Reduction (vph)	0	0	0	0	0	0
Lane Group Flow (vph)	578	0	80	551	172	0
Confl. Peds. (#/hr)		146	266			
Turn Type			Prot			
Protected Phases	4		3	8	2	
Permitted Phases						
Actuated Green, G (s)	48.0		12.8	64.8	12.2	
Effective Green, g (s)	48.0		12.8	64.8	12.2	
Actuated g/C Ratio	0.56		0.15	0.76	0.14	
Clearance Time (s)	4.0		4.0	4.0	4.0	
Vehicle Extension (s)	3.0		3.0	3.0	3.0	
Lane Grp Cap (vph)	1768		267	2698	249	
v/s Ratio Prot	c0.18		c0.05	0.16	c0.10	
v/s Ratio Perm						
v/c Ratio	0.33		0.30	0.20	0.69	
Uniform Delay, d1	9.9		32.1	2.8	34.6	
Progression Factor	1.00		0.89	0.55	1.12	
Incremental Delay, d2	0.5		0.5	0.1	8.0	
Delay (s)	10.4		29.0	1.7	46.8	
Level of Service	B		C	A	D	
Approach Delay (s)	10.4			5.2	46.8	
Approach LOS	B			A	D	

Intersection Summary			
HCM Average Control Delay	12.5	HCM Level of Service	B
HCM Volume to Capacity ratio	0.38		
Actuated Cycle Length (s)	85.0	Sum of lost time (s)	12.0
Intersection Capacity Utilization	39.2%	ICU Level of Service	A
Analysis Period (min)	15		
c Critical Lane Group			

Movement	EBL	EBT	EBR	WBL	WBT	WBR	NBL	NBT	NBR	SBL	SBT	SBR
Lane Configurations												
Ideal Flow (vphpl)	1900	1900	1900	1900	1900	1900	1900	1900	1900	1900	1900	1900
Total Lost time (s)	4.0	4.0		4.0	4.0		4.0	4.0		4.0	4.0	
Lane Util. Factor	1.00	0.95		1.00	0.95		1.00	0.95		1.00	0.95	
Frpb, ped/bikes	1.00	0.97		1.00	0.97		1.00	0.99		1.00	0.98	
Flpb, ped/bikes	0.93	1.00		0.92	1.00		1.00	1.00		1.00	1.00	
Frt	1.00	0.98		1.00	0.98		1.00	0.99		1.00	0.97	
Flt Protected	0.95	1.00		0.95	1.00		0.95	1.00		0.95	1.00	
Satd. Flow (prot)	1650	3361		1628	3370		1770	3450		1770	3369	
Flt Permitted	0.33	1.00		0.35	1.00		0.95	1.00		0.95	1.00	
Satd. Flow (perm)	577	3361		599	3370		1770	3450		1770	3369	
Volume (vph)	68	343	62	53	357	64	95	451	45	78	555	124
Peak-hour factor, PHF	0.90	0.90	0.90	0.90	0.90	0.90	0.90	0.90	0.90	0.90	0.90	0.90
Adj. Flow (vph)	76	381	69	59	397	71	106	501	50	87	617	138
RTOR Reduction (vph)	0	19	0	0	19	0	0	7	0	0	17	0
Lane Group Flow (vph)	76	431	0	59	449	0	106	544	0	87	738	0
Confl. Peds. (#/hr)	72		137	137		72			58	58		92
Turn Type	Perm			Perm			Prot			Prot		
Protected Phases		4			8		5	2		1	6	
Permitted Phases	4			8								
Actuated Green, G (s)	19.6	19.6		19.6	19.6		8.3	45.0		6.9	43.6	
Effective Green, g (s)	20.1	20.1		20.1	20.1		8.8	45.5		7.4	44.1	
Actuated g/C Ratio	0.24	0.24		0.24	0.24		0.10	0.54		0.09	0.52	
Clearance Time (s)	4.5	4.5		4.5	4.5		4.5	4.5		4.5	4.5	
Vehicle Extension (s)	2.0	2.0		2.0	2.0		2.0	2.0		2.0	2.0	
Lane Grp Cap (vph)	136	795		142	797		183	1847		154	1748	
v/s Ratio Prot		0.13			c0.13		c0.06	0.16		0.05	c0.22	
v/s Ratio Perm	0.13			0.10								
v/c Ratio	0.56	0.54		0.42	0.56		0.58	0.29		0.56	0.42	
Uniform Delay, d1	28.5	28.4		27.5	28.6		36.3	10.9		37.3	12.6	
Progression Factor	0.56	0.60		1.00	1.00		0.73	1.37		1.25	0.77	
Incremental Delay, d2	2.7	0.4		0.7	0.5		2.7	0.4		2.5	0.7	
Delay (s)	18.7	17.6		28.2	29.1		29.2	15.3		49.1	10.3	
Level of Service	B	B		C	C		C	B		D	B	
Approach Delay (s)		17.7			29.0			17.5			14.3	
Approach LOS		B			C			B			B	

Intersection Summary				
HCM Average Control Delay	18.9	HCM Level of Service	B	
HCM Volume to Capacity ratio	0.48			
Actuated Cycle Length (s)	85.0	Sum of lost time (s)	12.0	
Intersection Capacity Utilization	59.7%	ICU Level of Service	B	
Analysis Period (min)	15			

c Critical Lane Group

Movement	WBL	WBR	NBT	NBR	SBL	SBT
Lane Configurations						
Sign Control	Stop		Free			Free
Grade	0%		0%			0%
Volume (veh/h)	11	35	581	9	15	688
Peak Hour Factor	0.90	0.90	0.90	0.90	0.90	0.90
Hourly flow rate (vph)	12	39	646	10	17	764
Pedestrians	34		33			34
Lane Width (ft)	12.0		12.0			12.0
Walking Speed (ft/s)	4.0		4.0			4.0
Percent Blockage	3		3			3
Right turn flare (veh)						
Median type	None					
Median storage veh)						
Upstream signal (ft)			230			471
pX, platoon unblocked	0.89	0.97			0.97	
vC, conflicting volume	1133	396			690	
vC1, stage 1 conf vol						
vC2, stage 2 conf vol						
vCu, unblocked vol	929	349			651	
tC, single (s)	6.8	6.9			4.1	
tC, 2 stage (s)						
tF (s)	3.5	3.3			2.2	
p0 queue free %	94	93			98	
cM capacity (veh/h)	220	594			879	

Direction, Lane #	WB 1	NB 1	NB 2	SB 1	SB 2	SB 3
Volume Total	51	430	225	17	382	382
Volume Left	12	0	0	17	0	0
Volume Right	39	0	10	0	0	0
cSH	422	1700	1700	879	1700	1700
Volume to Capacity	0.12	0.25	0.13	0.02	0.22	0.22
Queue Length 95th (ft)	10	0	0	1	0	0
Control Delay (s)	14.7	0.0	0.0	9.2	0.0	0.0
Lane LOS	B			A		
Approach Delay (s)	14.7	0.0		0.2		
Approach LOS	B					

Intersection Summary			
Average Delay	0.6		
Intersection Capacity Utilization	36.3%	ICU Level of Service	A
Analysis Period (min)	15		

Movement	EBL	EBT	EBR	WBL	WBT	WBR	NBL	NBT	NBR	SBL	SBT	SBR
Lane Configurations												
Ideal Flow (vphpl)	1900	1900	1900	1900	1900	1900	1900	1900	1900	1900	1900	1900
Total Lost time (s)		4.0		4.0	4.0			4.0		4.0	4.0	
Lane Util. Factor		0.91		1.00	0.95			1.00		1.00	1.00	
Frpb, ped/bikes		1.00		1.00	1.00			0.99		1.00	1.00	
Flpb, ped/bikes		1.00		0.99	1.00			1.00		0.97	1.00	
Frt		0.99		1.00	0.97			0.98		1.00	0.99	
Flt Protected		0.99		0.95	1.00			0.99		0.95	1.00	
Satd. Flow (prot)		4986		1754	3419			1775		1725	1842	
Flt Permitted		0.88		0.53	1.00			0.88		0.44	1.00	
Satd. Flow (perm)		4407		976	3419			1579		801	1842	
Volume (vph)	34	272	25	51	276	67	58	174	49	64	188	12
Peak-hour factor, PHF	0.92	0.92	0.92	0.92	0.92	0.92	0.92	0.92	0.92	0.92	0.92	0.92
Adj. Flow (vph)	37	296	27	55	300	73	63	189	53	70	204	13
RTOR Reduction (vph)	0	10	0	0	25	0	0	9	0	0	3	0
Lane Group Flow (vph)	0	350	0	55	348	0	0	296	0	70	214	0
Confl. Peds. (#/hr)	24		18	18		24	24		48	48		24
Turn Type	Perm			Perm			Perm			Perm		
Protected Phases		4			8			2			6	
Permitted Phases	4			8			2			6		
Actuated Green, G (s)		51.0		51.0	51.0			24.0		24.0	24.0	
Effective Green, g (s)		52.0		52.0	52.0			25.0		25.0	25.0	
Actuated g/C Ratio		0.61		0.61	0.61			0.29		0.29	0.29	
Clearance Time (s)		5.0		5.0	5.0			5.0		5.0	5.0	
Lane Grp Cap (vph)		2696		597	2092			464		236	542	
v/s Ratio Prot					c0.10						0.12	
v/s Ratio Perm		0.08		0.06				c0.19		0.09		
v/c Ratio		0.13		0.09	0.17			0.64		0.30	0.40	
Uniform Delay, d1		7.0		6.8	7.1			26.1		23.2	24.0	
Progression Factor		1.00		1.00	1.00			1.00		1.00	1.00	
Incremental Delay, d2		0.1		0.3	0.2			6.6		3.2	2.2	
Delay (s)		7.1		7.1	7.3			32.6		26.4	26.1	
Level of Service		A		A	A			C		C	C	
Approach Delay (s)		7.1			7.3			32.6			26.2	
Approach LOS		A			A			C			C	

Intersection Summary			
HCM Average Control Delay	16.8	HCM Level of Service	B
HCM Volume to Capacity ratio	0.32		
Actuated Cycle Length (s)	85.0	Sum of lost time (s)	8.0
Intersection Capacity Utilization	92.5%	ICU Level of Service	F
Analysis Period (min)	15		
c Critical Lane Group			

Movement	EBL	EBT	EBR	WBL	WBT	WBR	NBL	NBT	NBR	SBL	SBT	SBR
Lane Configurations												
Ideal Flow (vphpl)	1900	1900	1900	1900	1900	1900	1900	1900	1900	1900	1900	1900
Total Lost time (s)		4.0			4.0		4.0	4.0		4.0	4.0	
Lane Util. Factor		0.91			0.91		1.00	1.00		1.00	1.00	
Frpb, ped/bikes		1.00			1.00		1.00	0.99		1.00	1.00	
Flpb, ped/bikes		1.00			1.00		0.99	1.00		0.99	1.00	
Frt		1.00			0.99		1.00	0.96		1.00	0.99	
Flt Protected		1.00			1.00		0.95	1.00		0.95	1.00	
Satd. Flow (prot)		5050			4992		1750	1782		1746	1837	
Flt Permitted		0.90			0.88		0.63	1.00		0.45	1.00	
Satd. Flow (perm)		4560			4415		1169	1782		829	1837	
Volume (vph)	25	376	7	34	340	33	30	170	53	23	119	10
Peak-hour factor, PHF	0.92	0.92	0.92	0.92	0.92	0.92	0.92	0.92	0.92	0.92	0.92	0.92
Adj. Flow (vph)	27	409	8	37	370	36	33	185	58	25	129	11
RTOR Reduction (vph)	0	2	0	0	13	0	0	14	0	0	4	0
Lane Group Flow (vph)	0	442	0	0	430	0	33	229	0	25	136	0
Confl. Peds. (#/hr)			18	18			12		18	18		12
Turn Type	Perm			Perm			Perm			Perm		
Protected Phases		4			8			2			6	
Permitted Phases	4			8			2			6		
Actuated Green, G (s)		50.0			50.0		19.0	19.0		19.0	19.0	
Effective Green, g (s)		51.5			51.5		20.5	20.5		20.5	20.5	
Actuated g/C Ratio		0.64			0.64		0.26	0.26		0.26	0.26	
Clearance Time (s)		5.5			5.5		5.5	5.5		5.5	5.5	
Lane Grp Cap (vph)		2936			2842		300	457		212	471	
v/s Ratio Prot								c0.13			0.07	
v/s Ratio Perm		0.10			c0.10		0.03			0.03		
v/c Ratio		0.15			0.15		0.11	0.50		0.12	0.29	
Uniform Delay, d1		5.6			5.6		22.8	25.4		22.8	23.9	
Progression Factor		1.00			0.80		1.00	1.00		0.96	0.96	
Incremental Delay, d2		0.1			0.1		0.7	3.9		1.1	1.5	
Delay (s)		5.7			4.6		23.5	29.3		23.0	24.4	
Level of Service		A			A		C	C		C	C	
Approach Delay (s)		5.7			4.6			28.6			24.2	
Approach LOS		A			A			C			C	

Intersection Summary			
HCM Average Control Delay	12.4	HCM Level of Service	B
HCM Volume to Capacity ratio	0.25		
Actuated Cycle Length (s)	80.0	Sum of lost time (s)	8.0
Intersection Capacity Utilization	51.3%	ICU Level of Service	A
Analysis Period (min)	15		
c Critical Lane Group			

Movement	EBL	EBT	EBR	WBL	WBT	WBR	NBL	NBT	NBR	SBL	SBT	SBR
Lane Configurations												
Ideal Flow (vphpl)	1900	1900	1900	1900	1900	1900	1900	1900	1900	1900	1900	1900
Total Lost time (s)		4.0			4.0			4.0			4.0	
Lane Util. Factor		0.91			0.91			0.95			0.95	
Frpb, ped/bikes		1.00			1.00			1.00			1.00	
Flpb, ped/bikes		1.00			1.00			1.00			1.00	
Frt		0.99			0.97			0.98			0.98	
Flt Protected		1.00			1.00			1.00			0.99	
Satd. Flow (prot)		5003			4863			3426			3421	
Flt Permitted		0.85			0.86			0.92			0.84	
Satd. Flow (perm)		4267			4215			3153			2910	
Volume (vph)	45	389	28	46	363	122	15	156	31	61	209	37
Peak-hour factor, PHF	0.92	0.92	0.92	0.92	0.92	0.92	0.92	0.92	0.92	0.92	0.92	0.92
Adj. Flow (vph)	49	423	30	50	395	133	16	170	34	66	227	40
RTOR Reduction (vph)	0	9	0	0	47	0	0	19	0	0	13	0
Lane Group Flow (vph)	0	493	0	0	531	0	0	201	0	0	320	0
Confl. Peds. (#/hr)	17		19	19		17	12		16	16		12
Turn Type	Perm			Perm			Perm			Perm		
Protected Phases		4			8			2			6	
Permitted Phases	4			8			2			6		
Actuated Green, G (s)		50.0			50.0			19.0			19.0	
Effective Green, g (s)		51.5			51.5			20.5			20.5	
Actuated g/C Ratio		0.64			0.64			0.26			0.26	
Clearance Time (s)		5.5			5.5			5.5			5.5	
Lane Grp Cap (vph)		2747			2713			808			746	
v/s Ratio Prot												
v/s Ratio Perm		0.12			c0.13			0.06			c0.11	
v/c Ratio		0.18			0.20			0.25			0.43	
Uniform Delay, d1		5.7			5.8			23.6			24.9	
Progression Factor		0.80			1.00			1.00			0.53	
Incremental Delay, d2		0.1			0.2			0.7			1.8	
Delay (s)		4.7			6.0			24.4			14.9	
Level of Service		A			A			C			B	
Approach Delay (s)		4.7			6.0			24.4			14.9	
Approach LOS		A			A			C			B	

Intersection Summary			
HCM Average Control Delay	9.9	HCM Level of Service	A
HCM Volume to Capacity ratio	0.26		
Actuated Cycle Length (s)	80.0	Sum of lost time (s)	8.0
Intersection Capacity Utilization	80.9%	ICU Level of Service	D
Analysis Period (min)	15		
c Critical Lane Group			

Movement	EBL	EBT	EBR	WBL	WBT	WBR	NBL	NBT	NBR	SBL	SBT	SBR
Lane Configurations												
Ideal Flow (vphpl)	1900	1900	1900	1900	1900	1900	1900	1900	1900	1900	1900	1900
Total Lost time (s)		4.0			4.0			4.0			4.0	
Lane Util. Factor		0.91			0.91			1.00			1.00	
Frpb, ped/bikes		1.00			0.95			1.00			0.95	
Flpb, ped/bikes		1.00			1.00			1.00			1.00	
Frt		1.00			0.97			0.93			0.93	
Flt Protected		1.00			1.00			0.98			0.98	
Satd. Flow (prot)		5062			4715			1695			1617	
Flt Permitted		0.91			0.93			0.90			0.83	
Satd. Flow (perm)		4638			4391			1556			1372	
Volume (vph)	16	477	10	10	470	100	10	0	10	58	0	55
Peak-hour factor, PHF	0.90	0.90	0.92	0.92	0.90	0.90	0.92	0.92	0.92	0.90	0.92	0.90
Adj. Flow (vph)	18	530	11	11	522	111	11	0	11	64	0	61
RTOR Reduction (vph)	0	1	0	0	0	0	0	10	0	0	0	0
Lane Group Flow (vph)	0	558	0	0	644	0	0	12	0	0	125	0
Confl. Peds. (#/hr)						98						98
Turn Type	Perm			Perm			Perm			Perm		
Protected Phases		4			8			2			6	
Permitted Phases	4			8			2			6		
Actuated Green, G (s)		65.5			65.5			11.5			11.5	
Effective Green, g (s)		65.5			65.5			11.5			11.5	
Actuated g/C Ratio		0.77			0.77			0.14			0.14	
Clearance Time (s)		4.0			4.0			4.0			4.0	
Vehicle Extension (s)		3.0			3.0			3.0			3.0	
Lane Grp Cap (vph)		3574			3384			211			186	
v/s Ratio Prot												
v/s Ratio Perm		0.12			c0.15			0.01			c0.09	
v/c Ratio		0.16			0.19			0.06			0.67	
Uniform Delay, d1		2.5			2.6			32.0			35.0	
Progression Factor		1.00			0.87			1.00			1.05	
Incremental Delay, d2		0.1			0.1			0.1			8.9	
Delay (s)		2.6			2.4			32.2			45.5	
Level of Service		A			A			C			D	
Approach Delay (s)		2.6			2.4			32.2			45.5	
Approach LOS		A			A			C			D	

Intersection Summary			
HCM Average Control Delay	7.0	HCM Level of Service	A
HCM Volume to Capacity ratio	0.26		
Actuated Cycle Length (s)	85.0	Sum of lost time (s)	8.0
Intersection Capacity Utilization	51.5%	ICU Level of Service	A
Analysis Period (min)	15		
c Critical Lane Group			

Movement	EBL	EBT	EBR	WBL	WBT	WBR	NBL	NBT	NBR	SBL	SBT	SBR
Lane Configurations												
Ideal Flow (vphpl)	1900	1900	1900	1900	1900	1900	1900	1900	1900	1900	1900	1900
Total Lost time (s)		4.0			4.0		4.0	4.0		4.0	4.0	
Lane Util. Factor		0.91			0.91		1.00	0.95		1.00	0.95	
Frpb, ped/bikes		1.00			0.99		1.00	1.00		1.00	0.99	
Flpb, ped/bikes		1.00			1.00		0.99	1.00		0.98	1.00	
Frt		0.97			0.97		1.00	0.98		1.00	0.97	
Flt Protected		0.99			0.99		0.95	1.00		0.95	1.00	
Satd. Flow (prot)		4869			4823		1753	3471		1738	3394	
Flt Permitted		0.69			0.74		0.38	1.00		0.51	1.00	
Satd. Flow (perm)		3386			3583		700	3471		927	3394	
Volume (vph)	109	337	94	79	382	132	60	348	39	100	475	134
Peak-hour factor, PHF	0.92	0.92	0.92	0.92	0.92	0.92	0.92	0.92	0.92	0.92	0.92	0.92
Adj. Flow (vph)	118	366	102	86	415	143	65	378	42	109	516	146
RTOR Reduction (vph)	0	55	0	0	108	0	0	5	0	0	15	0
Lane Group Flow (vph)	0	531	0	0	536	0	65	415	0	109	647	0
Confl. Peds. (#/hr)	40		9			40	25		31	31		25
Turn Type	Perm			pm+pt			Perm			Perm		
Protected Phases		4		3	8			2			6	
Permitted Phases	4			8			2			6		
Actuated Green, G (s)		19.2			19.2		55.3	55.3		55.3	55.3	
Effective Green, g (s)		20.7			20.7		56.3	56.3		56.3	56.3	
Actuated g/C Ratio		0.24			0.24		0.66	0.66		0.66	0.66	
Clearance Time (s)		5.5			5.5		5.0	5.0		5.0	5.0	
Vehicle Extension (s)		2.0			2.0		2.0	2.0		2.0	2.0	
Lane Grp Cap (vph)		825			873		464	2299		614	2248	
v/s Ratio Prot								0.12			c0.19	
v/s Ratio Perm		c0.16			0.15		0.09			0.12		
v/c Ratio		0.64			0.61		0.14	0.18		0.18	0.29	
Uniform Delay, d1		28.8			28.6		5.3	5.5		5.5	6.0	
Progression Factor		0.85			1.00		1.26	1.22		0.24	0.18	
Incremental Delay, d2		1.3			0.9		0.6	0.2		0.6	0.3	
Delay (s)		25.7			29.5		7.4	6.9		1.9	1.4	
Level of Service		C			C		A	A		A	A	
Approach Delay (s)		25.7			29.5			7.0			1.5	
Approach LOS		C			C			A			A	

Intersection Summary			
HCM Average Control Delay	15.5	HCM Level of Service	B
HCM Volume to Capacity ratio	0.38		
Actuated Cycle Length (s)	85.0	Sum of lost time (s)	8.0
Intersection Capacity Utilization	70.3%	ICU Level of Service	C
Analysis Period (min)	15		

c Critical Lane Group

Movement	EBL	EBT	EBR	WBL	WBT	WBR	NBL	NBT	NBR	SBL	SBT	SBR
Lane Configurations												
Ideal Flow (vphpl)	1900	1900	1900	1900	1900	1900	1900	1900	1900	1900	1900	1900
Total Lost time (s)		4.0			4.0			4.0	4.0		4.0	
Lane Util. Factor		0.91			0.91			1.00	1.00		1.00	
Frpb, ped/bikes		1.00			0.99			1.00	0.88		0.95	
Flpb, ped/bikes		1.00			1.00			0.93	1.00		0.94	
Frt		1.00			0.98			1.00	0.85		0.94	
Flt Protected		1.00			1.00			0.96	1.00		0.97	
Satd. Flow (prot)		5042			4928			1664	1395		1523	
Flt Permitted		0.89			0.91			0.84	1.00		0.86	
Satd. Flow (perm)		4494			4493			1458	1395		1346	
Volume (vph)	25	469	9	24	569	75	14	4	13	47	1	41
Peak-hour factor, PHF	0.91	0.91	0.91	0.91	0.91	0.91	0.91	0.91	0.91	0.91	0.91	0.91
Adj. Flow (vph)	27	515	10	26	625	82	15	4	14	52	1	45
RTOR Reduction (vph)	0	2	0	0	20	0	0	0	10	0	32	0
Lane Group Flow (vph)	0	550	0	0	713	0	0	19	4	0	66	0
Confl. Peds. (#/hr)	100		100	100		100	100		100	100		100
Turn Type	Perm			Perm			Perm		Perm	Perm		
Protected Phases		4			8			2			6	
Permitted Phases	4			8			2		2	6		
Actuated Green, G (s)		48.0			48.0			23.0	23.0		23.0	
Effective Green, g (s)		48.5			48.5			23.5	23.5		23.5	
Actuated g/C Ratio		0.61			0.61			0.29	0.29		0.29	
Clearance Time (s)		4.5			4.5			4.5	4.5		4.5	
Lane Grp Cap (vph)		2724			2724			428	410		395	
v/s Ratio Prot												
v/s Ratio Perm		0.12			c0.16			0.01	0.00		c0.05	
v/c Ratio		0.20			0.26			0.04	0.01		0.17	
Uniform Delay, d1		7.1			7.4			20.2	20.0		21.0	
Progression Factor		1.00			1.00			1.00	1.00		1.00	
Incremental Delay, d2		0.2			0.2			0.2	0.0		0.9	
Delay (s)		7.2			7.6			20.4	20.1		21.9	
Level of Service		A			A			C	C		C	
Approach Delay (s)		7.2			7.6			20.3			21.9	
Approach LOS		A			A			C			C	

Intersection Summary			
HCM Average Control Delay	8.7	HCM Level of Service	A
HCM Volume to Capacity ratio	0.23		
Actuated Cycle Length (s)	80.0	Sum of lost time (s)	8.0
Intersection Capacity Utilization	81.7%	ICU Level of Service	D
Analysis Period (min)	15		

c Critical Lane Group

Movement	EBL	EBT	EBR	WBL	WBT	WBR	NBL	NBT	NBR	SBL	SBT	SBR
Lane Configurations												
Ideal Flow (vphpl)	1900	1900	1900	1900	1900	1900	1900	1900	1900	1900	1900	1900
Total Lost time (s)	4.0	4.0		4.0	4.0		4.0	4.0		4.0	4.0	
Lane Util. Factor	1.00	0.91		1.00	0.91		1.00	0.91		1.00	0.91	
Frpb, ped/bikes	1.00	0.99		1.00	0.99		1.00	0.99		1.00	1.00	
Flpb, ped/bikes	1.00	1.00		1.00	1.00		1.00	1.00		1.00	1.00	
Frt	1.00	0.98		1.00	0.94		1.00	0.98		1.00	0.98	
Flt Protected	0.95	1.00		0.95	1.00		0.95	1.00		0.95	1.00	
Satd. Flow (prot)	1770	4943		1770	4737		1770	4943		1770	4981	
Flt Permitted	0.95	1.00		0.95	1.00		0.95	1.00		0.95	1.00	
Satd. Flow (perm)	1770	4943		1770	4737		1770	4943		1770	4981	
Volume (vph)	70	410	55	112	436	253	89	260	42	226	522	64
Peak-hour factor, PHF	0.90	0.90	0.90	0.90	0.90	0.90	0.90	0.90	0.90	0.90	0.90	0.90
Adj. Flow (vph)	78	456	61	124	484	281	99	289	47	251	580	71
RTOR Reduction (vph)	0	18	0	0	111	0	0	25	0	0	17	0
Lane Group Flow (vph)	78	499	0	124	654	0	99	312	0	251	634	0
Confl. Peds. (#/hr)			66			23			38			26
Turn Type	Prot			Prot			Prot			Prot		
Protected Phases	3	4		3	4		1	2		1	2	
Permitted Phases												
Actuated Green, G (s)	10.5	26.5		10.5	26.5		9.0	26.0		9.0	26.0	
Effective Green, g (s)	10.5	27.5		10.5	27.5		9.0	27.0		9.0	27.0	
Actuated g/C Ratio	0.12	0.31		0.12	0.31		0.10	0.30		0.10	0.30	
Clearance Time (s)	4.0	5.0		4.0	5.0		4.0	5.0		4.0	5.0	
Vehicle Extension (s)	2.0	2.0		2.0	2.0		2.0	2.0		2.0	2.0	
Lane Grp Cap (vph)	207	1510		207	1447		177	1483		177	1494	
v/s Ratio Prot	0.04	0.10		c0.07	c0.14		0.06	0.06		c0.14	c0.13	
v/s Ratio Perm												
v/c Ratio	0.38	0.33		0.60	0.45		0.56	0.21		1.42	0.42	
Uniform Delay, d1	36.7	24.1		37.8	25.2		38.6	23.5		40.5	25.3	
Progression Factor	1.00	1.00		0.97	2.02		1.00	1.00		1.00	1.00	
Incremental Delay, d2	0.4	0.6		2.4	0.8		2.2	0.3		217.9	0.9	
Delay (s)	37.1	24.7		39.2	51.6		40.8	23.9		258.4	26.2	
Level of Service	D	C		D	D		D	C		F	C	
Approach Delay (s)		26.4			49.8			27.7			90.8	
Approach LOS		C			D			C			F	

Intersection Summary			
HCM Average Control Delay	54.6	HCM Level of Service	D
HCM Volume to Capacity ratio	0.58		
Actuated Cycle Length (s)	90.0	Sum of lost time (s)	16.0
Intersection Capacity Utilization	72.9%	ICU Level of Service	C
Analysis Period (min)	15		

c Critical Lane Group

Movement	EBL	EBT	EBR	WBL	WBT	WBR	NBL	NBT	NBR	SBL	SBT	SBR
Lane Configurations												
Ideal Flow (vphpl)	1900	1900	1900	1900	1900	1900	1900	1900	1900	1900	1900	1900
Total Lost time (s)		4.0			4.0		4.0	4.0		4.0	4.0	
Lane Util. Factor		1.00			1.00		1.00	0.95		1.00	0.95	
Frpb, ped/bikes		0.93			0.95		1.00	0.99		1.00	0.98	
Flpb, ped/bikes		0.97			0.96		0.91	1.00		0.92	1.00	
Frt		0.95			0.94		1.00	0.99		1.00	0.99	
Flt Protected		0.98			0.99		0.95	1.00		0.95	1.00	
Satd. Flow (prot)		1570			1592		1610	3486		1635	3436	
Flt Permitted		0.73			0.90		0.49	1.00		0.43	1.00	
Satd. Flow (perm)		1163			1449		828	3486		748	3436	
Volume (vph)	27	19	26	25	34	42	54	507	24	24	384	37
Peak-hour factor, PHF	0.92	0.92	0.92	0.92	0.92	0.92	0.92	0.92	0.92	0.92	0.92	0.92
Adj. Flow (vph)	29	21	28	27	37	46	59	551	26	26	417	40
RTOR Reduction (vph)	0	26	0	0	39	0	0	2	0	0	4	0
Lane Group Flow (vph)	0	52	0	0	71	0	59	575	0	26	453	0
Confl. Peds. (#/hr)	100		100	100		100	100		100	100		100
Turn Type	Perm			Perm			Perm			Perm		
Protected Phases		4			4			2			6	
Permitted Phases	4			4			2			6		
Actuated Green, G (s)		7.3			7.3		70.7	70.7		70.7	70.7	
Effective Green, g (s)		6.8			6.8		70.2	70.2		70.2	70.2	
Actuated g/C Ratio		0.08			0.08		0.83	0.83		0.83	0.83	
Clearance Time (s)		3.5			3.5		3.5	3.5		3.5	3.5	
Vehicle Extension (s)		2.0			2.0		2.0	2.0		2.0	2.0	
Lane Grp Cap (vph)		93			116		684	2879		618	2838	
v/s Ratio Prot								c0.16			0.13	
v/s Ratio Perm		0.04			c0.05		0.07			0.03		
v/c Ratio		0.56			0.62		0.09	0.20		0.04	0.16	
Uniform Delay, d1		37.7			37.8		1.4	1.5		1.3	1.5	
Progression Factor		1.00			1.00		0.45	0.43		0.65	0.65	
Incremental Delay, d2		4.6			6.6		0.2	0.1		0.1	0.1	
Delay (s)		42.2			44.5		0.8	0.8		1.0	1.1	
Level of Service		D			D		A	A		A	A	
Approach Delay (s)		42.2			44.5			0.8			1.1	
Approach LOS		D			D			A			A	

Intersection Summary			
HCM Average Control Delay	7.1	HCM Level of Service	A
HCM Volume to Capacity ratio	0.24		
Actuated Cycle Length (s)	85.0	Sum of lost time (s)	8.0
Intersection Capacity Utilization	54.6%	ICU Level of Service	A
Analysis Period (min)	15		

c Critical Lane Group

Movement	EBL	EBT	EBR	WBL	WBT	WBR	NBL	NBT	NBR	SBL	SBT	SBR
Lane Configurations												
Ideal Flow (vphpl)	1900	1900	1900	1900	1900	1900	1900	1900	1900	1900	1900	1900
Total Lost time (s)	4.0	4.0		4.0	4.0		4.0	4.0		4.0	4.0	
Lane Util. Factor	1.00	0.95		1.00	0.95		1.00	0.95		1.00	0.95	
Frpb, ped/bikes	1.00	0.97		1.00	0.94		1.00	0.99		1.00	0.95	
Flpb, ped/bikes	1.00	1.00		1.00	1.00		0.93	1.00		0.95	1.00	
Frt	1.00	0.97		1.00	0.96		1.00	0.99		1.00	0.96	
Flt Protected	0.95	1.00		0.95	1.00		0.95	1.00		0.95	1.00	
Satd. Flow (prot)	1770	3330		1770	3191		1647	3464		1675	3209	
Flt Permitted	0.95	1.00		0.95	1.00		0.41	1.00		0.50	1.00	
Satd. Flow (perm)	1770	3330		1770	3191		710	3464		883	3209	
Volume (vph)	255	350	97	50	270	105	58	322	30	47	338	141
Peak-hour factor, PHF	0.90	0.90	0.90	0.90	0.90	0.90	0.90	0.90	0.90	0.90	0.90	0.90
Adj. Flow (vph)	283	389	108	56	300	117	64	358	33	52	376	157
RTOR Reduction (vph)	0	28	0	0	55	0	0	7	0	0	43	0
Lane Group Flow (vph)	283	469	0	56	362	0	64	384	0	52	490	0
Confl. Peds. (#/hr)			100			100	100		100	100		100
Turn Type	Prot			Prot			Perm			Perm		
Protected Phases	7	4		3	8			2			6	
Permitted Phases							2			6		
Actuated Green, G (s)	16.5	26.7		4.9	15.1		39.9	39.9		39.9	39.9	
Effective Green, g (s)	17.0	26.2		5.4	14.6		41.4	41.4		41.4	41.4	
Actuated g/C Ratio	0.20	0.31		0.06	0.17		0.49	0.49		0.49	0.49	
Clearance Time (s)	4.5	3.5		4.5	3.5		5.5	5.5		5.5	5.5	
Vehicle Extension (s)	2.0	2.0		2.0	2.0		2.0	2.0		2.0	2.0	
Lane Grp Cap (vph)	354	1026		112	548		346	1687		430	1563	
v/s Ratio Prot	c0.16	0.14		0.03	c0.11			0.11			c0.15	
v/s Ratio Perm							0.09			0.06		
v/c Ratio	0.80	0.46		0.50	0.66		0.18	0.23		0.12	0.31	
Uniform Delay, d1	32.4	23.7		38.5	32.9		12.3	12.6		11.9	13.2	
Progression Factor	1.00	1.00		1.00	1.00		1.00	1.00		0.71	0.68	
Incremental Delay, d2	11.2	0.1		1.3	2.3		1.2	0.3		0.6	0.5	
Delay (s)	43.6	23.8		39.8	35.2		13.5	12.9		9.0	9.4	
Level of Service	D	C		D	D		B	B		A	A	
Approach Delay (s)		31.0			35.8			13.0			9.4	
Approach LOS		C			D			B			A	

Intersection Summary			
HCM Average Control Delay	22.9	HCM Level of Service	C
HCM Volume to Capacity ratio	0.50		
Actuated Cycle Length (s)	85.0	Sum of lost time (s)	12.0
Intersection Capacity Utilization	72.3%	ICU Level of Service	C
Analysis Period (min)	15		

c Critical Lane Group

Movement	EBL	EBR	NBL	NBT	SBT	SBR
Lane Configurations						
Ideal Flow (vphpl)	1900	1900	1900	1900	1900	1900
Total Lost time (s)	4.0		4.0	4.0	4.0	
Lane Util. Factor	1.00		1.00	0.95	0.95	
Frt	0.91		1.00	1.00	0.98	
Flt Protected	0.98		0.95	1.00	1.00	
Satd. Flow (prot)	1670		1770	3539	3482	
Flt Permitted	0.98		0.95	1.00	1.00	
Satd. Flow (perm)	1670		1770	3539	3482	
Volume (vph)	67	126	58	558	597	73
Peak-hour factor, PHF	0.92	0.92	0.92	0.92	0.92	0.92
Adj. Flow (vph)	73	137	63	607	649	79
RTOR Reduction (vph)	81	0	0	0	10	0
Lane Group Flow (vph)	129	0	63	607	718	0
Turn Type			Prot			
Protected Phases	2		3	8	4	
Permitted Phases						
Actuated Green, G (s)	30.2		7.1	46.8	35.7	
Effective Green, g (s)	30.2		7.1	46.8	35.7	
Actuated g/C Ratio	0.36		0.08	0.55	0.42	
Clearance Time (s)	4.0		4.0	4.0	4.0	
Vehicle Extension (s)	3.0		3.0	3.0	3.0	
Lane Grp Cap (vph)	593		148	1949	1462	
v/s Ratio Prot	c0.08		c0.04	0.17	c0.21	
v/s Ratio Perm						
v/c Ratio	0.22		0.43	0.31	0.49	
Uniform Delay, d1	19.1		37.0	10.4	18.0	
Progression Factor	1.00		1.15	0.47	1.09	
Incremental Delay, d2	0.8		1.9	0.4	1.1	
Delay (s)	20.0		44.4	5.3	20.7	
Level of Service	B		D	A	C	
Approach Delay (s)	20.0			9.0	20.7	
Approach LOS	B			A	C	

Intersection Summary			
HCM Average Control Delay	15.7	HCM Level of Service	B
HCM Volume to Capacity ratio	0.37		
Actuated Cycle Length (s)	85.0	Sum of lost time (s)	12.0
Intersection Capacity Utilization	43.6%	ICU Level of Service	A
Analysis Period (min)	15		

c Critical Lane Group

Movement	EBL	EBT	EBR	WBL	WBT	WBR	NBL	NBT	NBR	SBL	SBT	SBR
Lane Configurations												
Ideal Flow (vphpl)	1900	1900	1900	1900	1900	1900	1900	1900	1900	1900	1900	1900
Lane Width	12	12	12	12	12	12	16	16	16	16	16	16
Total Lost time (s)	4.0	4.0		4.0	4.0		2.0	2.0		2.0	2.0	
Lane Util. Factor	1.00	0.91		1.00	0.91		1.00	1.00		1.00	1.00	
Frpb, ped/bikes	1.00	0.99		1.00	1.00		1.00	0.99		1.00	0.98	
Flpb, ped/bikes	1.00	1.00		1.00	1.00		1.00	1.00		0.98	1.00	
Frt	1.00	0.98		1.00	0.98		1.00	0.96		1.00	0.93	
Flt Protected	0.95	1.00		0.95	1.00		0.95	1.00		0.95	1.00	
Satd. Flow (prot)	1770	4930		1770	4971		2006	2001		1956	1917	
Flt Permitted	0.95	1.00		0.95	1.00		0.13	1.00		0.56	1.00	
Satd. Flow (perm)	1770	4930		1770	4971		269	2001		1159	1917	
Volume (vph)	322	1228	174	80	958	138	165	232	79	133	265	259
Peak-hour factor, PHF	0.95	0.95	0.95	0.95	0.95	0.95	0.95	0.95	0.95	0.95	0.95	0.95
Adj. Flow (vph)	339	1293	183	84	1008	145	174	244	83	140	279	273
RTOR Reduction (vph)	0	17	0	0	18	0	0	13	0	0	36	0
Lane Group Flow (vph)	339	1459	0	84	1135	0	174	314	0	140	516	0
Confl. Peds. (#/hr)			32	32		4	12		24	24		12
Parking (#/hr)												0
Turn Type	Prot			Prot			pm+pt			Perm		
Protected Phases	7	4		3	8		5	2			6	
Permitted Phases							2			6		
Actuated Green, G (s)	20.0	40.0		7.7	27.7		41.8	41.8		28.9	28.9	
Effective Green, g (s)	20.0	40.0		7.7	27.7		42.3	42.3		29.4	29.4	
Actuated g/C Ratio	0.20	0.40		0.08	0.28		0.42	0.42		0.29	0.29	
Clearance Time (s)	4.0	4.0		4.0	4.0		4.0	2.5		2.5	2.5	
Vehicle Extension (s)	3.0	3.0		3.0	3.0		3.0	3.0		3.0	3.0	
Lane Grp Cap (vph)	354	1972		136	1377		303	846		341	564	
v/s Ratio Prot	c0.19	0.30		0.05	c0.23		c0.06	0.16			c0.27	
v/s Ratio Perm							0.18			0.12		
v/c Ratio	0.96	0.74		0.62	0.82		0.57	0.37		0.41	0.91	
Uniform Delay, d1	39.6	25.6		44.7	33.9		23.1	19.8		28.3	34.1	
Progression Factor	1.00	1.00		1.00	1.00		1.00	1.00		1.00	1.00	
Incremental Delay, d2	36.4	2.5		8.1	5.7		2.6	0.3		0.8	19.5	
Delay (s)	75.9	28.1		52.8	39.6		25.7	20.0		29.1	53.6	
Level of Service	E	C		D	D		C	C		C	D	
Approach Delay (s)		37.0			40.5			22.0			48.6	
Approach LOS		D			D			C			D	

Intersection Summary			
HCM Average Control Delay	38.2	HCM Level of Service	D
HCM Volume to Capacity ratio	0.85		
Actuated Cycle Length (s)	100.0	Sum of lost time (s)	12.0
Intersection Capacity Utilization	92.3%	ICU Level of Service	F
Analysis Period (min)	15		

c Critical Lane Group

Movement	EBL	EBT	EBR	WBL	WBT	WBR	NBL	NBT	NBR	SBL	SBT	SBR
Lane Configurations												
Ideal Flow (vphpl)	1900	1900	1900	1900	1900	1900	1900	1900	1900	1900	1900	1900
Total Lost time (s)		4.0		4.0	4.0			4.0		4.0	4.0	
Lane Util. Factor		1.00		0.95	0.95			0.95		1.00	0.95	
Frpb, ped/bikes		1.00		1.00	0.92			0.94		1.00	0.90	
Flpb, ped/bikes		1.00		1.00	1.00			1.00		1.00	1.00	
Frt		0.92		1.00	0.92			0.97		1.00	0.95	
Flt Protected		0.98		0.95	1.00			1.00		0.95	1.00	
Satd. Flow (prot)		1688		1681	1494			3200		1770	3037	
Flt Permitted		0.48		0.73	1.00			0.94		0.95	1.00	
Satd. Flow (perm)		823		1296	1494			3012		1770	3037	
Volume (vph)	12	3	21	104	102	118	10	997	284	98	802	398
Peak-hour factor, PHF	0.95	0.95	0.95	0.95	0.95	0.95	0.95	0.95	0.95	0.95	0.95	0.95
Adj. Flow (vph)	13	3	22	109	107	124	11	1049	299	103	844	419
RTOR Reduction (vph)	0	21	0	0	45	0	0	20	0	0	47	0
Lane Group Flow (vph)	0	17	0	109	186	0	0	1339	0	103	1216	0
Confl. Peds. (#/hr)						100	100		100			100
Turn Type	Perm			Perm			Perm			Prot		
Protected Phases		7			8			2		1	6	
Permitted Phases	7			8			2					
Actuated Green, G (s)		5.1		15.8	15.8			52.4		8.7	65.6	
Effective Green, g (s)		5.6		16.3	16.3			52.9		9.2	66.1	
Actuated g/C Ratio		0.06		0.16	0.16			0.53		0.09	0.66	
Clearance Time (s)		4.5		4.5	4.5			4.5		4.5	4.5	
Vehicle Extension (s)		2.0		2.0	2.0			2.0		2.0	2.0	
Lane Grp Cap (vph)		46		211	244			1593		163	2007	
v/s Ratio Prot					c0.12					0.06	c0.40	
v/s Ratio Perm		c0.02		0.08				c0.44				
v/c Ratio		0.37		0.52	0.76			0.84		0.63	0.61	
Uniform Delay, d1		45.5		38.2	40.0			20.0		43.8	9.6	
Progression Factor		1.00		1.00	1.00			0.80		1.00	1.00	
Incremental Delay, d2		1.9		0.9	11.9			3.1		5.8	1.4	
Delay (s)		47.4		39.1	51.9			18.9		49.5	11.0	
Level of Service		D		D	D			B		D	B	
Approach Delay (s)		47.4			47.8			18.9			13.9	
Approach LOS		D			D			B			B	

Intersection Summary			
HCM Average Control Delay	20.2	HCM Level of Service	C
HCM Volume to Capacity ratio	0.78		
Actuated Cycle Length (s)	100.0	Sum of lost time (s)	16.0
Intersection Capacity Utilization	102.5%	ICU Level of Service	G
Analysis Period (min)	15		

c Critical Lane Group

Movement	EBL	EBT	EBR	WBL	WBT	WBR	NBL	NBT	NBR	SBL	SBT	SBR
Lane Configurations												
Ideal Flow (vphpl)	1900	1900	1900	1900	1900	1900	1900	1900	1900	1900	1900	1900
Total Lost time (s)	4.0	4.0		4.0	4.0		4.0	4.0		4.0	4.0	
Lane Util. Factor	0.97	0.95		1.00	0.95		1.00	0.95		1.00	0.95	
Frpb, ped/bikes	1.00	0.98		1.00	0.95		1.00	0.97		1.00	0.98	
Flpb, ped/bikes	1.00	1.00		1.00	1.00		1.00	1.00		1.00	1.00	
Frt	1.00	0.99		1.00	0.95		1.00	0.97		1.00	0.99	
Flt Protected	0.95	1.00		0.95	1.00		0.95	1.00		0.95	1.00	
Satd. Flow (prot)	3433	3429		1770	3221		1770	3357		1770	3434	
Flt Permitted	0.95	1.00		0.95	1.00		0.95	1.00		0.95	1.00	
Satd. Flow (perm)	3433	3429		1770	3221		1770	3357		1770	3434	
Volume (vph)	508	822	71	93	468	212	69	593	127	203	678	56
Peak-hour factor, PHF	0.95	0.95	0.95	0.95	0.95	0.95	0.95	0.95	0.95	0.95	0.95	0.95
Adj. Flow (vph)	535	865	75	98	493	223	73	624	134	214	714	59
RTOR Reduction (vph)	0	6	0	0	52	0	0	18	0	0	6	0
Lane Group Flow (vph)	535	934	0	98	664	0	73	740	0	214	767	0
Confl. Peds. (#/hr)			100			100			100			100
Turn Type	Prot			Prot			Prot			Prot		
Protected Phases	7	4		3	8		5	2		1	6	
Permitted Phases												
Actuated Green, G (s)	16.0	30.5		8.0	22.5		5.0	32.5		12.0	39.5	
Effective Green, g (s)	15.5	31.5		7.5	23.5		4.5	33.5		11.5	40.5	
Actuated g/C Ratio	0.16	0.32		0.08	0.24		0.04	0.34		0.12	0.40	
Clearance Time (s)	3.5	5.0		3.5	5.0		3.5	5.0		3.5	5.0	
Vehicle Extension (s)	2.0	2.0		2.0	2.0		2.0	2.0		2.0	2.0	
Lane Grp Cap (vph)	532	1080		133	757		80	1125		204	1391	
v/s Ratio Prot	c0.16	c0.27		0.06	0.21		0.04	c0.22		c0.12	0.22	
v/s Ratio Perm												
v/c Ratio	1.01	0.86		0.74	0.88		0.91	0.66		1.05	0.55	
Uniform Delay, d1	42.2	32.2		45.3	36.9		47.6	28.4		44.2	22.8	
Progression Factor	1.00	1.00		1.00	1.00		1.00	1.00		1.17	0.79	
Incremental Delay, d2	40.4	7.1		16.6	10.9		70.5	3.0		70.9	1.3	
Delay (s)	82.7	39.4		61.9	47.7		118.0	31.4		122.7	19.4	
Level of Service	F	D		E	D		F	C		F	B	
Approach Delay (s)		55.1			49.4			39.0			41.8	
Approach LOS		E			D			D			D	

Intersection Summary			
HCM Average Control Delay	47.5	HCM Level of Service	D
HCM Volume to Capacity ratio	0.82		
Actuated Cycle Length (s)	100.0	Sum of lost time (s)	12.0
Intersection Capacity Utilization	82.2%	ICU Level of Service	E
Analysis Period (min)	15		

c Critical Lane Group

Movement	EBL	EBT	EBR	WBL	WBT	WBR	NBL	NBT	NBR	SBL	SBT	SBR
Lane Configurations												
Ideal Flow (vphpl)	1900	1900	1900	1900	1900	1900	1900	1900	1900	1900	1900	1900
Total Lost time (s)		4.0						4.0		4.0	4.0	
Lane Util. Factor		1.00						0.95		0.97	0.95	
Frt		0.86						0.93		1.00	0.97	
Flt Protected		1.00						1.00		0.95	1.00	
Satd. Flow (prot)		1611						3289		3433	3442	
Flt Permitted		1.00						0.95		0.95	1.00	
Satd. Flow (perm)		1611						3112		3433	3442	
Volume (vph)	0	0	6	0	0	0	10	285	258	1430	287	64
Peak-hour factor, PHF	0.92	0.92	0.92	0.92	0.92	0.92	0.92	0.92	0.92	0.92	0.92	0.92
Adj. Flow (vph)	0	0	7	0	0	0	11	310	280	1554	312	70
RTOR Reduction (vph)	0	7	0	0	0	0	0	21	0	0	0	0
Lane Group Flow (vph)	0	0	0	0	0	0	0	580	0	1554	382	0
Turn Type							Perm			Prot		
Protected Phases								2		1	6	
Permitted Phases							2					
Actuated Green, G (s)		0.0						13.0		29.0	50.0	
Effective Green, g (s)		0.0						13.0		29.0	50.0	
Actuated g/C Ratio		0.00						0.26		0.58	1.00	
Clearance Time (s)								4.0		4.0	2.0	
Lane Grp Cap (vph)		0						809		1991	3442	
v/s Ratio Prot										c0.45	0.11	
v/s Ratio Perm								c0.19				
v/c Ratio		0.00						0.72		0.78	0.11	
Uniform Delay, d1		25.0						16.8		8.1	0.0	
Progression Factor		1.00						0.75		1.00	1.00	
Incremental Delay, d2		0.0						5.2		3.1	0.1	
Delay (s)		25.0						17.9		11.2	0.1	
Level of Service		C						B		B	A	
Approach Delay (s)		25.0			0.0			17.9			9.0	
Approach LOS		C			A			B			A	

Intersection Summary			
HCM Average Control Delay	11.1	HCM Level of Service	B
HCM Volume to Capacity ratio	0.76		
Actuated Cycle Length (s)	50.0	Sum of lost time (s)	8.0
Intersection Capacity Utilization	70.6%	ICU Level of Service	C
Analysis Period (min)	15		

c Critical Lane Group

Movement	EBL	EBT	EBR	WBL	WBT	WBR	NBL	NBT	NBR	SBL	SBT	SBR
Lane Configurations												
Ideal Flow (vphpl)	1900	1900	1900	1900	1900	1900	1900	1900	1900	1900	1900	1900
Total Lost time (s)		4.0			4.0			4.0			4.0	
Lane Util. Factor		1.00			1.00			0.95			0.95	
Frpb, ped/bikes		0.95			0.97			0.98			0.99	
Flpb, ped/bikes		0.98			0.96			1.00			0.99	
Frt		0.96			0.96			0.98			0.99	
Flt Protected		0.98			0.99			1.00			0.99	
Satd. Flow (prot)		1643			1649			3403			3438	
Flt Permitted		0.88			0.91			0.94			0.85	
Satd. Flow (perm)		1471			1519			3200			2957	
Volume (vph)	26	27	21	48	72	50	18	420	66	43	263	20
Peak-hour factor, PHF	0.90	0.90	0.90	0.90	0.90	0.90	0.90	0.90	0.90	0.90	0.90	0.90
Adj. Flow (vph)	29	30	23	53	80	56	20	467	73	48	292	22
RTOR Reduction (vph)	0	15	0	0	30	0	0	24	0	0	10	0
Lane Group Flow (vph)	0	67	0	0	159	0	0	537	0	0	353	0
Confl. Peds. (#/hr)	100		100	100		100	100		100	100		100
Turn Type	Perm			Perm			Perm			Perm		
Protected Phases		4			8			2			6	
Permitted Phases	4			8			2			6		
Actuated Green, G (s)		17.0			17.0			25.0			25.0	
Effective Green, g (s)		17.0			17.0			25.0			25.0	
Actuated g/C Ratio		0.34			0.34			0.50			0.50	
Clearance Time (s)		4.0			4.0			4.0			4.0	
Lane Grp Cap (vph)		500			516			1600			1479	
v/s Ratio Prot												
v/s Ratio Perm		0.05			c0.10			c0.17			0.12	
v/c Ratio		0.13			0.31			0.34			0.24	
Uniform Delay, d1		11.4			12.2			7.5			7.1	
Progression Factor		1.00			1.00			1.00			1.00	
Incremental Delay, d2		0.6			1.5			0.6			0.4	
Delay (s)		12.0			13.7			8.1			7.5	
Level of Service		B			B			A			A	
Approach Delay (s)		12.0			13.7			8.1			7.5	
Approach LOS		B			B			A			A	

Intersection Summary			
HCM Average Control Delay	9.1	HCM Level of Service	A
HCM Volume to Capacity ratio	0.32		
Actuated Cycle Length (s)	50.0	Sum of lost time (s)	8.0
Intersection Capacity Utilization	62.8%	ICU Level of Service	B
Analysis Period (min)	15		
c Critical Lane Group			

Movement	EBL	EBT	EBR	WBL	WBT	WBR	NBL	NBT	NBR	SBL	SBT	SBR
Lane Configurations												
Ideal Flow (vphpl)	1900	1900	1900	1900	1900	1900	1900	1900	1900	1900	1900	1900
Total Lost time (s)		4.0			4.0			4.0			4.0	
Lane Util. Factor		1.00			1.00			0.95			0.91	
Frpb, ped/bikes		0.96			0.96			0.99			0.98	
Flpb, ped/bikes		0.97			0.98			1.00			1.00	
Frt		0.96			0.97			0.99			0.99	
Flt Protected		0.98			0.99			1.00			1.00	
Satd. Flow (prot)		1631			1680			3475			4926	
Flt Permitted		0.86			0.86			0.91			0.91	
Satd. Flow (perm)		1420			1459			3180			4488	
Volume (vph)	46	49	39	19	41	21	24	1042	39	18	919	67
Peak-hour factor, PHF	0.94	0.94	0.94	0.94	0.94	0.94	0.94	0.94	0.94	0.94	0.94	0.94
Adj. Flow (vph)	49	52	41	20	44	22	26	1109	41	19	978	71
RTOR Reduction (vph)	0	28	0	0	19	0	0	1	0	0	4	0
Lane Group Flow (vph)	0	114	0	0	67	0	0	1175	0	0	1064	0
Confl. Peds. (#/hr)	100		100	100		100	100		100	100		100
Turn Type	Perm			Perm			Perm			Perm		
Protected Phases		4			4			2			6	
Permitted Phases	4			4			2			6		
Actuated Green, G (s)		8.6			8.6			62.4			62.4	
Effective Green, g (s)		9.1			9.1			62.9			62.9	
Actuated g/C Ratio		0.11			0.11			0.79			0.79	
Clearance Time (s)		4.5			4.5			4.5			4.5	
Vehicle Extension (s)		2.0			2.0			2.0			2.0	
Lane Grp Cap (vph)		162			166			2500			3529	
v/s Ratio Prot												
v/s Ratio Perm		c0.08			0.05			c0.37			0.24	
v/c Ratio		0.70			0.40			0.47			0.30	
Uniform Delay, d1		34.1			32.9			2.9			2.4	
Progression Factor		1.00			1.00			1.36			1.00	
Incremental Delay, d2		10.6			0.6			0.5			0.2	
Delay (s)		44.8			33.5			4.5			2.6	
Level of Service		D			C			A			A	
Approach Delay (s)		44.8			33.5			4.5			2.6	
Approach LOS		D			C			A			A	

Intersection Summary			
HCM Average Control Delay	7.0	HCM Level of Service	A
HCM Volume to Capacity ratio	0.50		
Actuated Cycle Length (s)	80.0	Sum of lost time (s)	8.0
Intersection Capacity Utilization	81.6%	ICU Level of Service	D
Analysis Period (min)	15		
c Critical Lane Group			

Movement	EBL	EBT	EBR	WBL	WBT	WBR	NBL	NBT	NBR	SBL	SBT	SBR
Lane Configurations												
Ideal Flow (vphpl)	1900	1900	1900	1900	1900	1900	1900	1900	1900	1900	1900	1900
Total Lost time (s)	4.0	4.0		4.0	4.0		4.0	4.0		4.0	4.0	
Lane Util. Factor	1.00	0.95		1.00	0.95		1.00	1.00		1.00	1.00	
Frpb, ped/bikes	1.00	0.99		1.00	0.98		1.00	0.99		1.00	0.99	
Flpb, ped/bikes	0.96	1.00		0.98	1.00		0.96	1.00		0.97	1.00	
Frt	1.00	0.99		1.00	0.98		1.00	0.98		1.00	0.99	
Flt Protected	0.95	1.00		0.95	1.00		0.95	1.00		0.95	1.00	
Satd. Flow (prot)	1693	3486		1731	3401		1697	1822		1720	1830	
Flt Permitted	0.29	1.00		0.24	1.00		0.56	1.00		0.37	1.00	
Satd. Flow (perm)	523	3486		444	3401		992	1822		667	1830	
Volume (vph)	26	671	45	44	546	84	109	389	43	93	222	19
Peak-hour factor, PHF	0.92	0.92	0.92	0.92	0.92	0.92	0.92	0.92	0.92	0.92	0.92	0.92
Adj. Flow (vph)	28	729	49	48	593	91	118	423	47	101	241	21
RTOR Reduction (vph)	0	6	0	0	15	0	0	5	0	0	4	0
Lane Group Flow (vph)	28	772	0	48	669	0	118	465	0	101	258	0
Confl. Peds. (#/hr)	100		100	100		100	100		100	100		100
Turn Type	Perm			Perm			Perm			Perm		
Protected Phases		4			8			2			6	
Permitted Phases	4			8			2			6		
Actuated Green, G (s)	33.0	33.0		33.0	33.0		40.5	40.5		40.5	40.5	
Effective Green, g (s)	32.0	32.0		32.0	32.0		40.0	40.0		40.0	40.0	
Actuated g/C Ratio	0.40	0.40		0.40	0.40		0.50	0.50		0.50	0.50	
Clearance Time (s)	3.0	3.0		3.0	3.0		3.5	3.5		3.5	3.5	
Lane Grp Cap (vph)	209	1394		178	1360		496	911		334	915	
v/s Ratio Prot		c0.22			0.20			c0.26			0.14	
v/s Ratio Perm	0.05			0.11			0.12			0.15		
v/c Ratio	0.13	0.55		0.27	0.49		0.24	0.51		0.30	0.28	
Uniform Delay, d1	15.2	18.5		16.1	17.9		11.4	13.4		11.8	11.6	
Progression Factor	1.00	1.00		1.94	2.02		1.81	1.85		1.00	1.00	
Incremental Delay, d2	1.3	1.6		3.2	1.1		0.7	1.3		2.3	0.8	
Delay (s)	16.5	20.1		34.4	37.3		21.2	26.1		14.1	12.4	
Level of Service	B	C		C	D		C	C		B	B	
Approach Delay (s)		20.0			37.1			25.1			12.9	
Approach LOS		B			D			C			B	

Intersection Summary			
HCM Average Control Delay	25.2	HCM Level of Service	C
HCM Volume to Capacity ratio	0.53		
Actuated Cycle Length (s)	80.0	Sum of lost time (s)	8.0
Intersection Capacity Utilization	81.0%	ICU Level of Service	D
Analysis Period (min)	15		
c Critical Lane Group			

Movement	EBL	EBT	EBR	WBL	WBT	WBR	NBL	NBT	NBR	SBL	SBT	SBR
Lane Configurations												
Ideal Flow (vphpl)	1900	1900	1900	1900	1900	1900	1900	1900	1900	1900	1900	1900
Total Lost time (s)	4.0	4.0		4.0	4.0			4.0			4.0	
Lane Util. Factor	1.00	0.95		1.00	0.95			0.95			0.95	
Frpb, ped/bikes	1.00	0.99		1.00	0.99			0.99			0.99	
Flpb, ped/bikes	0.97	1.00		0.98	1.00			0.99			1.00	
Frt	1.00	0.99		1.00	0.99			0.98			0.97	
Flt Protected	0.95	1.00		0.95	1.00			0.99			0.99	
Satd. Flow (prot)	1709	3471		1730	3494			3343			3337	
Flt Permitted	0.25	1.00		0.16	1.00			0.84			0.91	
Satd. Flow (perm)	450	3471		291	3494			2857			3043	
Volume (vph)	26	769	60	29	615	31	74	165	44	19	96	33
Peak-hour factor, PHF	0.97	0.97	0.97	0.97	0.97	0.97	0.97	0.97	0.97	0.97	0.97	0.97
Adj. Flow (vph)	27	793	62	30	634	32	76	170	45	20	99	34
RTOR Reduction (vph)	0	7	0	0	5	0	0	6	0	0	12	0
Lane Group Flow (vph)	27	848	0	30	661	0	0	285	0	0	141	0
Confl. Peds. (#/hr)	100		100	100		100	100		100	100		100
Turn Type	Perm			Perm			Perm			Perm		
Protected Phases		4			8			2			6	
Permitted Phases	4			8			2			6		
Actuated Green, G (s)	24.0	24.0		24.0	24.0			46.0			46.0	
Effective Green, g (s)	25.0	25.0		25.0	25.0			47.0			47.0	
Actuated g/C Ratio	0.31	0.31		0.31	0.31			0.59			0.59	
Clearance Time (s)	5.0	5.0		5.0	5.0			5.0			5.0	
Lane Grp Cap (vph)	141	1085		91	1092			1678			1788	
v/s Ratio Prot		c0.24			0.19							
v/s Ratio Perm	0.06			0.10				c0.10			0.05	
v/c Ratio	0.19	0.78		0.33	0.61			0.17			0.08	
Uniform Delay, d1	20.1	25.0		21.1	23.3			7.6			7.1	
Progression Factor	0.45	0.50		0.87	0.89			1.25			1.00	
Incremental Delay, d2	2.6	4.9		8.5	2.2			0.2			0.1	
Delay (s)	11.7	17.3		26.8	23.1			9.6			7.2	
Level of Service	B	B		C	C			A			A	
Approach Delay (s)		17.1			23.2			9.6			7.2	
Approach LOS		B			C			A			A	

Intersection Summary			
HCM Average Control Delay	17.4	HCM Level of Service	B
HCM Volume to Capacity ratio	0.38		
Actuated Cycle Length (s)	80.0	Sum of lost time (s)	8.0
Intersection Capacity Utilization	60.8%	ICU Level of Service	B
Analysis Period (min)	15		
c Critical Lane Group			

Movement	EBL	EBT	EBR	WBL	WBT	WBR	NBL	NBT	NBR	SBL	SBT	SBR
Lane Configurations												
Ideal Flow (vphpl)	1900	1900	1900	1900	1900	1900	1900	1900	1900	1900	1900	1900
Total Lost time (s)	4.0	4.0		4.0	4.0			4.0			4.0	
Lane Util. Factor	1.00	0.95		1.00	0.95			0.95			0.95	
Frpb, ped/bikes	1.00	1.00		1.00	1.00			0.99			1.00	
Flpb, ped/bikes	1.00	1.00		0.99	1.00			1.00			1.00	
Frt	1.00	0.99		1.00	0.97			0.96			0.98	
Flt Protected	0.95	1.00		0.95	1.00			0.99			0.99	
Satd. Flow (prot)	1765	3482		1757	3431			3354			3433	
Flt Permitted	0.27	1.00		0.24	1.00			0.88			0.78	
Satd. Flow (perm)	510	3482		440	3431			2954			2724	
Volume (vph)	51	751	70	106	619	128	53	273	117	75	219	38
Peak-hour factor, PHF	0.99	0.99	0.99	0.99	0.99	0.99	0.99	0.99	0.99	0.99	0.99	0.99
Adj. Flow (vph)	52	759	71	107	625	129	54	276	118	76	221	38
RTOR Reduction (vph)	0	9	0	0	22	0	0	45	0	0	12	0
Lane Group Flow (vph)	52	821	0	107	732	0	0	403	0	0	323	0
Confl. Peds. (#/hr)	8		39	39		8			25	25		
Turn Type	Perm			Perm			Perm			Perm		
Protected Phases		4			8			2			6	
Permitted Phases	4			8			2			6		
Actuated Green, G (s)	35.5	35.5		35.5	35.5			38.0			38.0	
Effective Green, g (s)	35.0	35.0		35.0	35.0			37.0			37.0	
Actuated g/C Ratio	0.44	0.44		0.44	0.44			0.46			0.46	
Clearance Time (s)	3.5	3.5		3.5	3.5			3.0			3.0	
Lane Grp Cap (vph)	223	1523		193	1501			1366			1260	
v/s Ratio Prot		0.24			0.21							
v/s Ratio Perm	0.10			c0.24				c0.14			0.12	
v/c Ratio	0.23	0.54		0.55	0.49			0.29			0.26	
Uniform Delay, d1	14.1	16.6		16.7	16.1			13.4			13.1	
Progression Factor	0.93	1.07		1.00	1.00			0.77			1.00	
Incremental Delay, d2	1.7	0.9		11.0	1.1			0.5			0.5	
Delay (s)	14.8	18.7		27.7	17.2			10.8			13.6	
Level of Service	B	B		C	B			B			B	
Approach Delay (s)		18.5			18.5			10.8			13.6	
Approach LOS		B			B			B			B	

Intersection Summary			
HCM Average Control Delay	16.5	HCM Level of Service	B
HCM Volume to Capacity ratio	0.42		
Actuated Cycle Length (s)	80.0	Sum of lost time (s)	8.0
Intersection Capacity Utilization	87.0%	ICU Level of Service	E
Analysis Period (min)	15		
c Critical Lane Group			

Movement	EBT	EBR	WBL	WBT	NBL	NBR
Lane Configurations						
Ideal Flow (vphpl)	1900	1900	1900	1900	1900	1900
Total Lost time (s)	4.0		4.0	4.0	4.0	4.0
Lane Util. Factor	0.95		1.00	0.95	1.00	1.00
Frpb, ped/bikes	0.94		1.00	1.00	1.00	1.00
Flpb, ped/bikes	1.00		1.00	1.00	1.00	1.00
Frt	0.98		1.00	1.00	1.00	0.85
Flt Protected	1.00		0.95	1.00	0.95	1.00
Satd. Flow (prot)	3255		1770	3539	1770	1583
Flt Permitted	1.00		0.95	1.00	0.95	1.00
Satd. Flow (perm)	3255		1770	3539	1770	1583
Volume (vph)	840	109	52	737	120	46
Peak-hour factor, PHF	0.97	0.97	0.97	0.97	0.97	0.97
Adj. Flow (vph)	866	112	54	760	124	47
RTOR Reduction (vph)	0	0	0	0	0	0
Lane Group Flow (vph)	978	0	54	760	124	47
Confl. Peds. (#/hr)		213	348			
Turn Type			Prot			Perm
Protected Phases	4		3	8	2	
Permitted Phases						2
Actuated Green, G (s)	57.6		5.6	67.2	9.8	9.8
Effective Green, g (s)	57.6		5.6	67.2	9.8	9.8
Actuated g/C Ratio	0.68		0.07	0.79	0.12	0.12
Clearance Time (s)	4.0		4.0	4.0	4.0	4.0
Vehicle Extension (s)	3.0		3.0	3.0	3.0	3.0
Lane Grp Cap (vph)	2206		117	2798	204	183
v/s Ratio Prot	c0.30		c0.03	0.21	c0.07	
v/s Ratio Perm						0.03
v/c Ratio	0.44		0.46	0.27	0.61	0.26
Uniform Delay, d1	6.3		38.2	2.4	35.8	34.3
Progression Factor	1.00		1.00	1.00	0.89	0.87
Incremental Delay, d2	0.6		2.9	0.2	5.0	0.7
Delay (s)	7.0		41.1	2.6	36.7	30.7
Level of Service	A		D	A	D	C
Approach Delay (s)	7.0			5.2	35.0	
Approach LOS	A			A	D	

Intersection Summary			
HCM Average Control Delay	8.7	HCM Level of Service	A
HCM Volume to Capacity ratio	0.47		
Actuated Cycle Length (s)	85.0	Sum of lost time (s)	12.0
Intersection Capacity Utilization	47.6%	ICU Level of Service	A
Analysis Period (min)	15		
c Critical Lane Group			

Movement	EBL	EBT	EBR	WBL	WBT	WBR	NBL	NBT	NBR	SBL	SBT	SBR
Lane Configurations												
Ideal Flow (vphpl)	1900	1900	1900	1900	1900	1900	1900	1900	1900	1900	1900	1900
Total Lost time (s)	4.0	4.0		4.0	4.0		4.0	4.0		4.0	4.0	
Lane Util. Factor	1.00	0.95		1.00	0.95		1.00	0.95		1.00	0.95	
Frpb, ped/bikes	1.00	0.99		1.00	0.97		1.00	0.99		1.00	0.98	
Flpb, ped/bikes	0.93	1.00		0.98	1.00		1.00	1.00		1.00	1.00	
Frt	1.00	0.98		1.00	0.98		1.00	0.99		1.00	0.97	
Flt Protected	0.95	1.00		0.95	1.00		0.95	1.00		0.95	1.00	
Satd. Flow (prot)	1644	3419		1727	3367		1770	3466		1770	3362	
Flt Permitted	0.30	1.00		0.18	1.00		0.95	1.00		0.95	1.00	
Satd. Flow (perm)	518	3419		323	3367		1770	3466		1770	3362	
Volume (vph)	128	659	99	36	472	76	186	868	82	103	618	136
Peak-hour factor, PHF	0.98	0.98	0.98	0.98	0.98	0.98	0.98	0.98	0.98	0.98	0.98	0.98
Adj. Flow (vph)	131	672	101	37	482	78	190	886	84	105	631	139
RTOR Reduction (vph)	0	16	0	0	17	0	0	8	0	0	21	0
Lane Group Flow (vph)	131	757	0	37	543	0	190	962	0	105	749	0
Confl. Peds. (#/hr)	94		86	86		94			40			111
Turn Type	Perm			Perm			Prot			Prot		
Protected Phases		4			8		5	2		1	6	
Permitted Phases	4			8								
Actuated Green, G (s)	22.0	22.0		22.0	22.0		11.5	36.6		7.9	33.0	
Effective Green, g (s)	22.5	22.5		22.5	22.5		12.0	37.1		8.4	33.5	
Actuated g/C Ratio	0.28	0.28		0.28	0.28		0.15	0.46		0.11	0.42	
Clearance Time (s)	4.5	4.5		4.5	4.5		4.5	4.5		4.5	4.5	
Vehicle Extension (s)	2.0	2.0		2.0	2.0		2.0	2.0		2.0	2.0	
Lane Grp Cap (vph)	146	962		91	947		266	1607		186	1408	
v/s Ratio Prot		0.22			0.16		c0.11	c0.28		0.06	0.22	
v/s Ratio Perm	c0.25			0.11								
v/c Ratio	0.90	0.79		0.41	0.57		0.71	0.60		0.56	0.53	
Uniform Delay, d1	27.6	26.5		23.3	24.6		32.4	15.9		34.1	17.4	
Progression Factor	1.00	1.00		1.00	1.00		1.00	1.00		0.94	1.03	
Incremental Delay, d2	44.2	4.0		1.1	0.5		7.4	1.7		2.3	1.4	
Delay (s)	71.8	30.5		24.4	25.2		39.7	17.6		34.1	19.2	
Level of Service	E	C		C	C		D	B		C	B	
Approach Delay (s)		36.5			25.1			21.2			21.0	
Approach LOS		D			C			C			C	

Intersection Summary			
HCM Average Control Delay	25.7	HCM Level of Service	C
HCM Volume to Capacity ratio	0.73		
Actuated Cycle Length (s)	80.0	Sum of lost time (s)	12.0
Intersection Capacity Utilization	72.5%	ICU Level of Service	C
Analysis Period (min)	15		

c Critical Lane Group

Movement	WBL	WBR	NBT	NBR	SBL	SBT
Lane Configurations						
Sign Control	Stop		Free			Free
Grade	0%		0%			0%
Volume (veh/h)	7	33	1070	31	15	806
Peak Hour Factor	0.90	0.90	0.90	0.90	0.90	0.90
Hourly flow rate (vph)	8	37	1189	34	17	896
Pedestrians	52		52			45
Lane Width (ft)	12.0		12.0			12.0
Walking Speed (ft/s)	4.0		4.0			4.0
Percent Blockage	4		4			4
Right turn flare (veh)						
Median type	None					
Median storage veh)						
Upstream signal (ft)			230			503
pX, platoon unblocked	0.91	0.88			0.88	
vC, conflicting volume	1791	709			1275	
vC1, stage 1 conf vol						
vC2, stage 2 conf vol						
vCu, unblocked vol	1618	539			1180	
tC, single (s)	6.8	6.9			4.1	
tC, 2 stage (s)						
tF (s)	3.5	3.3			2.2	
p0 queue free %	90	91			97	
cM capacity (veh/h)	76	396			497	

Direction, Lane #	WB 1	NB 1	NB 2	SB 1	SB 2	SB 3
Volume Total	44	793	431	17	448	448
Volume Left	8	0	0	17	0	0
Volume Right	37	0	34	0	0	0
cSH	227	1700	1700	497	1700	1700
Volume to Capacity	0.20	0.47	0.25	0.03	0.26	0.26
Queue Length 95th (ft)	18	0	0	3	0	0
Control Delay (s)	24.6	0.0	0.0	12.5	0.0	0.0
Lane LOS	C			B		
Approach Delay (s)	24.6	0.0		0.2		
Approach LOS	C					

Intersection Summary			
Average Delay	0.6		
Intersection Capacity Utilization	48.9%	ICU Level of Service	A
Analysis Period (min)	15		

Movement	EBL	EBT	EBR	WBL	WBT	WBR	NBL	NBT	NBR	SBL	SBT	SBR
Lane Configurations												
Ideal Flow (vphpl)	1900	1900	1900	1900	1900	1900	1900	1900	1900	1900	1900	1900
Total Lost time (s)		4.0		4.0	4.0			4.0		4.0	4.0	
Lane Util. Factor		0.91		1.00	0.95			1.00		1.00	1.00	
Frpb, ped/bikes		1.00		1.00	0.98			0.98		1.00	0.99	
Flpb, ped/bikes		1.00		0.97	1.00			0.99		0.97	1.00	
Frt		0.99		1.00	0.95			0.98		1.00	0.99	
Flt Protected		0.99		0.95	1.00			0.99		0.95	1.00	
Satd. Flow (prot)		4984		1719	3287			1766		1714	1832	
Flt Permitted		0.80		0.33	1.00			0.82		0.27	1.00	
Satd. Flow (perm)		3996		591	3287			1449		482	1832	
Volume (vph)	112	629	27	64	326	168	58	364	84	65	288	20
Peak-hour factor, PHF	0.98	0.98	0.98	0.98	0.98	0.98	0.98	0.98	0.98	0.98	0.98	0.98
Adj. Flow (vph)	114	642	28	65	333	171	59	371	86	66	294	20
RTOR Reduction (vph)	0	5	0	0	38	0	0	9	0	0	3	0
Lane Group Flow (vph)	0	779	0	65	466	0	0	507	0	66	311	0
Confl. Peds. (#/hr)	100		100	100		100	100		100	100		100
Turn Type	Perm			Perm			Perm			Perm		
Protected Phases		4			8			2			6	
Permitted Phases	4			8			2			6		
Actuated Green, G (s)		46.0		46.0	46.0			24.0		24.0	24.0	
Effective Green, g (s)		47.0		47.0	47.0			25.0		25.0	25.0	
Actuated g/C Ratio		0.59		0.59	0.59			0.31		0.31	0.31	
Clearance Time (s)		5.0		5.0	5.0			5.0		5.0	5.0	
Lane Grp Cap (vph)		2348		347	1931			453		151	573	
v/s Ratio Prot					0.14						0.17	
v/s Ratio Perm		c0.19		0.11				c0.35		0.14		
v/c Ratio		0.33		0.19	0.24			1.12		0.44	0.54	
Uniform Delay, d1		8.5		7.6	7.9			27.5		21.9	22.8	
Progression Factor		1.00		1.37	1.44			1.00		0.75	0.75	
Incremental Delay, d2		0.4		1.2	0.3			79.0		8.7	3.6	
Delay (s)		8.8		11.6	11.7			106.5		25.1	20.6	
Level of Service		A		B	B			F		C	C	
Approach Delay (s)		8.8			11.7			106.5			21.4	
Approach LOS		A			B			F			C	

Intersection Summary			
HCM Average Control Delay	34.1	HCM Level of Service	C
HCM Volume to Capacity ratio	0.61		
Actuated Cycle Length (s)	80.0	Sum of lost time (s)	8.0
Intersection Capacity Utilization	138.5%	ICU Level of Service	H
Analysis Period (min)	15		
c Critical Lane Group			

Movement	EBL	EBT	EBR	WBL	WBT	WBR	NBL	NBT	NBR	SBL	SBT	SBR
Lane Configurations												
Ideal Flow (vphpl)	1900	1900	1900	1900	1900	1900	1900	1900	1900	1900	1900	1900
Total Lost time (s)		4.0			4.0		4.0	4.0		4.0	4.0	
Lane Util. Factor		0.91			0.91		1.00	1.00		1.00	1.00	
Frpb, ped/bikes		0.99			0.99		1.00	0.97		1.00	0.98	
Flpb, ped/bikes		1.00			0.99		0.91	1.00		0.94	1.00	
Frt		0.99			0.98		1.00	0.96		1.00	0.98	
Flt Protected		1.00			0.99		0.95	1.00		0.95	1.00	
Satd. Flow (prot)		4969			4882		1605	1733		1658	1799	
Flt Permitted		0.88			0.80		0.63	1.00		0.36	1.00	
Satd. Flow (perm)		4397			3937		1057	1733		628	1799	
Volume (vph)	39	569	40	68	404	64	41	210	72	56	121	17
Peak-hour factor, PHF	0.95	0.95	0.95	0.95	0.95	0.95	0.95	0.95	0.95	0.95	0.95	0.95
Adj. Flow (vph)	41	599	42	72	425	67	43	221	76	59	127	18
RTOR Reduction (vph)	0	9	0	0	21	0	0	16	0	0	7	0
Lane Group Flow (vph)	0	673	0	0	543	0	43	281	0	59	138	0
Confl. Peds. (#/hr)	100		100	100		100	100		100	100		100
Turn Type	Perm			Perm			Perm			Perm		
Protected Phases		4			8			2			6	
Permitted Phases	4			8			2			6		
Actuated Green, G (s)		51.5			51.5		20.5	20.5		20.5	20.5	
Effective Green, g (s)		51.5			51.5		20.5	20.5		20.5	20.5	
Actuated g/C Ratio		0.64			0.64		0.26	0.26		0.26	0.26	
Clearance Time (s)		4.0			4.0		4.0	4.0		4.0	4.0	
Lane Grp Cap (vph)		2831			2534		271	444		161	461	
v/s Ratio Prot								c0.16			0.08	
v/s Ratio Perm		c0.15			0.14		0.04			0.09		
v/c Ratio		0.24			0.21		0.16	0.63		0.37	0.30	
Uniform Delay, d1		6.0			5.9		23.1	26.4		24.4	24.0	
Progression Factor		1.25			0.90		1.00	1.00		1.21	1.23	
Incremental Delay, d2		0.2			0.2		1.2	6.7		6.1	1.6	
Delay (s)		7.7			5.5		24.3	33.2		35.6	31.1	
Level of Service		A			A		C	C		D	C	
Approach Delay (s)		7.7			5.5			32.0			32.4	
Approach LOS		A			A			C			C	

Intersection Summary			
HCM Average Control Delay	14.4	HCM Level of Service	B
HCM Volume to Capacity ratio	0.35		
Actuated Cycle Length (s)	80.0	Sum of lost time (s)	8.0
Intersection Capacity Utilization	87.0%	ICU Level of Service	E
Analysis Period (min)	15		
c Critical Lane Group			

Movement	EBL	EBT	EBR	WBL	WBT	WBR	NBL	NBT	NBR	SBL	SBT	SBR
Lane Configurations												
Ideal Flow (vphpl)	1900	1900	1900	1900	1900	1900	1900	1900	1900	1900	1900	1900
Total Lost time (s)		4.0			4.0			4.0			4.0	
Lane Util. Factor		0.91			0.91			0.95			0.95	
Frpb, ped/bikes		1.00			1.00			0.99			1.00	
Flpb, ped/bikes		1.00			1.00			1.00			1.00	
Frt		0.99			0.96			0.96			0.98	
Flt Protected		1.00			1.00			0.99			0.99	
Satd. Flow (prot)		5019			4819			3363			3377	
Flt Permitted		0.83			0.85			0.86			0.73	
Satd. Flow (perm)		4206			4116			2900			2507	
Volume (vph)	61	621	34	48	422	195	39	181	72	121	212	66
Peak-hour factor, PHF	0.99	0.99	0.99	0.99	0.99	0.99	0.99	0.99	0.99	0.99	0.99	0.99
Adj. Flow (vph)	62	627	34	48	426	197	39	183	73	122	214	67
RTOR Reduction (vph)	0	7	0	0	70	0	0	40	0	0	21	0
Lane Group Flow (vph)	0	716	0	0	601	0	0	255	0	0	382	0
Confl. Peds. (#/hr)	9		17	17		9	12		10	10		12
Turn Type	Perm			Perm			Perm			Perm		
Protected Phases		4			8			2			6	
Permitted Phases	4			8			2			6		
Actuated Green, G (s)		50.0			50.0			19.0			19.0	
Effective Green, g (s)		51.5			51.5			20.5			20.5	
Actuated g/C Ratio		0.64			0.64			0.26			0.26	
Clearance Time (s)		5.5			5.5			5.5			5.5	
Lane Grp Cap (vph)		2708			2650			743			642	
v/s Ratio Prot												
v/s Ratio Perm		c0.17			0.15			0.09			c0.15	
v/c Ratio		0.26			0.23			0.34			0.60	
Uniform Delay, d1		6.1			5.9			24.3			26.1	
Progression Factor		1.49			1.00			1.00			0.73	
Incremental Delay, d2		0.2			0.2			1.3			4.0	
Delay (s)		9.3			6.1			25.5			23.2	
Level of Service		A			A			C			C	
Approach Delay (s)		9.3			6.1			25.5			23.2	
Approach LOS		A			A			C			C	

Intersection Summary			
HCM Average Control Delay	13.3	HCM Level of Service	B
HCM Volume to Capacity ratio	0.36		
Actuated Cycle Length (s)	80.0	Sum of lost time (s)	8.0
Intersection Capacity Utilization	94.1%	ICU Level of Service	F
Analysis Period (min)	15		
c Critical Lane Group			

Movement	EBL	EBT	EBR	WBL	WBT	WBR	NBL	NBT	NBR	SBL	SBT	SBR
Lane Configurations												
Ideal Flow (vphpl)	1900	1900	1900	1900	1900	1900	1900	1900	1900	1900	1900	1900
Total Lost time (s)		4.0			4.0			4.0			4.0	
Lane Util. Factor		0.91			0.91			1.00			1.00	
Frpb, ped/bikes		1.00			0.99			1.00			0.95	
Flpb, ped/bikes		1.00			1.00			1.00			1.00	
Frt		1.00			0.98			0.93			0.92	
Flt Protected		1.00			1.00			0.98			0.98	
Satd. Flow (prot)		5061			4930			1695			1597	
Flt Permitted		0.83			0.92			0.85			0.86	
Satd. Flow (perm)		4206			4550			1474			1403	
Volume (vph)	80	763	0	10	475	57	10	0	10	128	0	193
Peak-hour factor, PHF	0.96	0.96	0.92	0.92	0.96	0.96	0.92	0.92	0.92	0.96	0.92	0.96
Adj. Flow (vph)	83	795	0	11	495	59	11	0	11	133	0	201
RTOR Reduction (vph)	0	0	0	0	0	0	0	8	0	0	0	0
Lane Group Flow (vph)	0	878	0	0	565	0	0	14	0	0	334	0
Confl. Peds. (#/hr)						79						79
Turn Type	Perm			Perm			Perm			Perm		
Protected Phases		4			8			2			6	
Permitted Phases	4			8			2			6		
Actuated Green, G (s)		52.4			52.4			24.6			24.6	
Effective Green, g (s)		52.4			52.4			24.6			24.6	
Actuated g/C Ratio		0.62			0.62			0.29			0.29	
Clearance Time (s)		4.0			4.0			4.0			4.0	
Vehicle Extension (s)		3.0			3.0			3.0			3.0	
Lane Grp Cap (vph)		2593			2805			427			406	
v/s Ratio Prot												
v/s Ratio Perm		c0.21			0.12			0.01			c0.24	
v/c Ratio		0.34			0.20			0.03			0.82	
Uniform Delay, d1		7.9			7.1			21.7			28.2	
Progression Factor		1.00			1.00			1.00			1.00	
Incremental Delay, d2		0.4			0.2			0.0			12.5	
Delay (s)		8.3			7.3			21.7			40.6	
Level of Service		A			A			C			D	
Approach Delay (s)		8.3			7.3			21.7			40.6	
Approach LOS		A			A			C			D	

Intersection Summary			
HCM Average Control Delay	14.1	HCM Level of Service	B
HCM Volume to Capacity ratio	0.49		
Actuated Cycle Length (s)	85.0	Sum of lost time (s)	8.0
Intersection Capacity Utilization	64.9%	ICU Level of Service	C
Analysis Period (min)	15		
c Critical Lane Group			

Movement	EBL	EBT	EBR	WBL	WBT	WBR	NBL	NBT	NBR	SBL	SBT	SBR
Lane Configurations												
Ideal Flow (vphpl)	1900	1900	1900	1900	1900	1900	1900	1900	1900	1900	1900	1900
Total Lost time (s)		4.0			4.0		4.0	4.0		4.0	4.0	
Lane Util. Factor		0.91			0.91		1.00	0.95		1.00	0.95	
Frpb, ped/bikes		1.00			0.99		1.00	0.99		1.00	1.00	
Flpb, ped/bikes		1.00			1.00		0.98	1.00		0.97	1.00	
Frt		0.99			0.95		1.00	0.98		1.00	0.99	
Flt Protected		0.99			1.00		0.95	1.00		0.95	1.00	
Satd. Flow (prot)		4925			4748		1740	3426		1725	3484	
Flt Permitted		0.67			0.69		0.36	1.00		0.26	1.00	
Satd. Flow (perm)		3325			3269		666	3426		480	3484	
Volume (vph)	224	594	81	61	358	195	100	737	98	134	567	46
Peak-hour factor, PHF	0.90	0.90	0.90	0.90	0.90	0.90	0.90	0.90	0.90	0.90	0.90	0.90
Adj. Flow (vph)	249	660	90	68	398	217	111	819	109	149	630	51
RTOR Reduction (vph)	0	12	0	0	14	0	0	5	0	0	3	0
Lane Group Flow (vph)	0	987	0	0	669	0	111	923	0	149	678	0
Confl. Peds. (#/hr)	26		19			26	39		92	92		39
Turn Type	Perm			pm+pt			Perm			Perm		
Protected Phases		4		3	8			2			6	
Permitted Phases	4			8			2			6		
Actuated Green, G (s)		26.5			26.5		66.0	66.0		66.0	66.0	
Effective Green, g (s)		28.0			28.0		67.0	67.0		67.0	67.0	
Actuated g/C Ratio		0.27			0.27		0.65	0.65		0.65	0.65	
Clearance Time (s)		5.5			5.5		5.0	5.0		5.0	5.0	
Vehicle Extension (s)		2.0			2.0		2.0	2.0		2.0	2.0	
Lane Grp Cap (vph)		904			889		433	2229		312	2266	
v/s Ratio Prot								0.27			0.19	
v/s Ratio Perm		c0.30			0.20		0.17			c0.31		
v/c Ratio		1.23dl			0.88dl		0.26	0.41		0.48	0.30	
Uniform Delay, d1		37.5			34.3		7.6	8.6		9.1	7.8	
Progression Factor		1.00			1.00		1.00	1.00		1.00	1.00	
Incremental Delay, d2		58.3			3.2		1.4	0.6		5.2	0.3	
Delay (s)		95.8			37.6		9.0	9.2		14.3	8.1	
Level of Service		F			D		A	A		B	A	
Approach Delay (s)		95.8			37.6			9.2			9.3	
Approach LOS		F			D			A			A	

Intersection Summary			
HCM Average Control Delay	39.0	HCM Level of Service	D
HCM Volume to Capacity ratio	0.66		
Actuated Cycle Length (s)	103.0	Sum of lost time (s)	8.0
Intersection Capacity Utilization	80.2%	ICU Level of Service	D
Analysis Period (min)	15		

dl Defacto Left Lane. Recode with 1 though lane as a left lane.
c Critical Lane Group

Movement	EBL	EBT	EBR	WBL	WBT	WBR	NBL	NBT	NBR	SBL	SBT	SBR
Lane Configurations												
Ideal Flow (vphpl)	1900	1900	1900	1900	1900	1900	1900	1900	1900	1900	1900	1900
Total Lost time (s)		4.0			4.0			4.0	4.0		4.0	
Lane Util. Factor		0.91			0.91			1.00	1.00		1.00	
Frpb, ped/bikes		1.00			1.00			1.00	0.89		0.94	
Flpb, ped/bikes		1.00			1.00			0.97	1.00		0.98	
Frt		0.99			0.99			1.00	0.85		0.93	
Flt Protected		1.00			0.99			0.98	1.00		0.99	
Satd. Flow (prot)		5022			4982			1777	1406		1583	
Flt Permitted		0.89			0.77			0.86	1.00		0.92	
Satd. Flow (perm)		4498			3868			1561	1406		1466	
Volume (vph)	36	771	30	82	530	28	53	92	191	33	33	68
Peak-hour factor, PHF	0.99	0.99	0.99	0.99	0.99	0.99	0.99	0.99	0.99	0.99	0.99	0.99
Adj. Flow (vph)	36	779	30	83	535	28	54	93	193	33	33	69
RTOR Reduction (vph)	0	5	0	0	6	0	0	0	93	0	47	0
Lane Group Flow (vph)	0	840	0	0	640	0	0	147	100	0	88	0
Confl. Peds. (#/hr)	100		100	100		100	100		100	100		100
Turn Type	Perm			Perm			Perm		Perm	Perm		
Protected Phases		4			8			2			6	
Permitted Phases	4			8			2		2	6		
Actuated Green, G (s)		49.5			49.5			24.5	24.5		24.5	
Effective Green, g (s)		48.5			48.5			23.5	23.5		23.5	
Actuated g/C Ratio		0.61			0.61			0.29	0.29		0.29	
Clearance Time (s)		3.0			3.0			3.0	3.0		3.0	
Lane Grp Cap (vph)		2727			2345			459	413		431	
v/s Ratio Prot												
v/s Ratio Perm		c0.19			0.17			c0.09	0.07		0.06	
v/c Ratio		0.31			0.27			0.32	0.24		0.20	
Uniform Delay, d1		7.6			7.4			22.0	21.5		21.2	
Progression Factor		1.00			1.00			1.00	1.00		1.00	
Incremental Delay, d2		0.3			0.3			1.8	1.4		1.1	
Delay (s)		7.9			7.7			23.9	22.9		22.3	
Level of Service		A			A			C	C		C	
Approach Delay (s)		7.9			7.7			23.3			22.3	
Approach LOS		A			A			C			C	

Intersection Summary			
HCM Average Control Delay	11.5	HCM Level of Service	B
HCM Volume to Capacity ratio	0.31		
Actuated Cycle Length (s)	80.0	Sum of lost time (s)	8.0
Intersection Capacity Utilization	96.6%	ICU Level of Service	F
Analysis Period (min)	15		

c Critical Lane Group

Movement	EBL	EBT	EBR	WBL	WBT	WBR	NBL	NBT	NBR	SBL	SBT	SBR
Lane Configurations												
Ideal Flow (vphpl)	1900	1900	1900	1900	1900	1900	1900	1900	1900	1900	1900	1900
Total Lost time (s)	4.0	4.0		4.0	4.0		4.0	4.0		4.0	4.0	
Lane Util. Factor	1.00	0.91		1.00	0.91		1.00	0.91		1.00	0.91	
Frpb, ped/bikes	1.00	0.99		1.00	0.99		1.00	0.99		1.00	0.99	
Flpb, ped/bikes	1.00	1.00		1.00	1.00		1.00	1.00		1.00	1.00	
Frt	1.00	0.98		1.00	0.95		1.00	0.98		1.00	0.98	
Flt Protected	0.95	1.00		0.95	1.00		0.95	1.00		0.95	1.00	
Satd. Flow (prot)	1770	4940		1770	4742		1770	4932		1770	4933	
Flt Permitted	0.95	1.00		0.95	1.00		0.95	1.00		0.95	1.00	
Satd. Flow (perm)	1770	4940		1770	4742		1770	4932		1770	4933	
Volume (vph)	187	689	84	81	376	210	167	653	106	307	377	63
Peak-hour factor, PHF	0.91	0.91	0.91	0.91	0.91	0.91	0.91	0.91	0.91	0.91	0.91	0.91
Adj. Flow (vph)	205	757	92	89	413	231	184	718	116	337	414	69
RTOR Reduction (vph)	0	15	0	0	100	0	0	22	0	0	23	0
Lane Group Flow (vph)	205	834	0	89	544	0	184	812	0	337	460	0
Confl. Peds. (#/hr)			81			22			50			43
Turn Type	Prot			Prot			Prot			Prot		
Protected Phases	3	4		3	4		1	2		1	2	
Permitted Phases												
Actuated Green, G (s)	11.0	24.1		11.0	24.1		20.9	26.0		20.9	26.0	
Effective Green, g (s)	11.0	25.1		11.0	25.1		20.9	27.0		20.9	27.0	
Actuated g/C Ratio	0.11	0.25		0.11	0.25		0.21	0.27		0.21	0.27	
Clearance Time (s)	4.0	5.0		4.0	5.0		4.0	5.0		4.0	5.0	
Vehicle Extension (s)	2.0	2.0		2.0	2.0		2.0	2.0		2.0	2.0	
Lane Grp Cap (vph)	195	1240		195	1190		370	1332		370	1332	
v/s Ratio Prot	c0.12	c0.17		0.05	0.11		0.10	c0.16		c0.19	0.09	
v/s Ratio Perm												
v/c Ratio	1.05	0.67		0.46	0.46		0.50	0.61		0.91	0.35	
Uniform Delay, d1	44.5	33.7		41.7	31.7		34.9	31.9		38.6	29.4	
Progression Factor	1.00	1.00		1.00	1.00		1.00	1.00		1.00	1.00	
Incremental Delay, d2	78.6	2.9		0.6	1.3		0.4	2.1		25.5	0.7	
Delay (s)	123.1	36.7		42.3	33.0		35.3	34.0		64.1	30.1	
Level of Service	F	D		D	C		D	C		E	C	
Approach Delay (s)		53.5			34.1			34.2			44.1	
Approach LOS		D			C			C			D	

Intersection Summary			
HCM Average Control Delay	42.0	HCM Level of Service	D
HCM Volume to Capacity ratio	0.76		
Actuated Cycle Length (s)	100.0	Sum of lost time (s)	16.0
Intersection Capacity Utilization	81.5%	ICU Level of Service	D
Analysis Period (min)	15		

c Critical Lane Group

Movement	EBL	EBT	EBR	WBL	WBT	WBR	NBL	NBT	NBR	SBL	SBT	SBR
Lane Configurations												
Ideal Flow (vphpl)	1900	1900	1900	1900	1900	1900	1900	1900	1900	1900	1900	1900
Total Lost time (s)		4.0			4.0		4.0	4.0		4.0	4.0	
Lane Util. Factor		1.00			1.00		1.00	0.95		1.00	0.95	
Frpb, ped/bikes		0.94			0.97		1.00	0.99		1.00	0.99	
Flpb, ped/bikes		0.96			0.97		0.95	1.00		0.93	1.00	
Frt		0.95			0.96		1.00	0.99		1.00	0.99	
Flt Protected		0.98			0.99		0.95	1.00		0.95	1.00	
Satd. Flow (prot)		1563			1657		1688	3468		1645	3454	
Flt Permitted		0.71			0.84		0.30	1.00		0.41	1.00	
Satd. Flow (perm)		1132			1418		538	3468		709	3454	
Volume (vph)	97	33	65	42	59	38	40	546	35	32	763	59
Peak-hour factor, PHF	0.94	0.94	0.94	0.94	0.94	0.94	0.94	0.94	0.94	0.94	0.94	0.94
Adj. Flow (vph)	103	35	69	45	63	40	43	581	37	34	812	63
RTOR Reduction (vph)	0	24	0	0	18	0	0	4	0	0	5	0
Lane Group Flow (vph)	0	183	0	0	130	0	43	614	0	34	870	0
Confl. Peds. (#/hr)	100		100	100		100	100		100	100		100
Turn Type	Perm			Perm			Perm			Perm		
Protected Phases		4			4			2			6	
Permitted Phases	4			4			2			6		
Actuated Green, G (s)		16.1			16.1		61.9	61.9		61.9	61.9	
Effective Green, g (s)		15.6			15.6		61.4	61.4		61.4	61.4	
Actuated g/C Ratio		0.18			0.18		0.72	0.72		0.72	0.72	
Clearance Time (s)		3.5			3.5		3.5	3.5		3.5	3.5	
Vehicle Extension (s)		2.0			2.0		2.0	2.0		2.0	2.0	
Lane Grp Cap (vph)		208			260		389	2505		512	2495	
v/s Ratio Prot								0.18			c0.25	
v/s Ratio Perm		c0.16			0.09		0.08			0.05		
v/c Ratio		0.88			0.50		0.11	0.25		0.07	0.35	
Uniform Delay, d1		33.8			31.2		3.6	4.0		3.4	4.4	
Progression Factor		1.00			1.00		0.99	0.89		1.00	1.00	
Incremental Delay, d2		30.5			0.6		0.5	0.2		0.2	0.4	
Delay (s)		64.3			31.7		4.1	3.8		3.7	4.8	
Level of Service		E			C		A	A		A	A	
Approach Delay (s)		64.3			31.7			3.8			4.7	
Approach LOS		E			C			A			A	

Intersection Summary			
HCM Average Control Delay	12.9	HCM Level of Service	B
HCM Volume to Capacity ratio	0.46		
Actuated Cycle Length (s)	85.0	Sum of lost time (s)	8.0
Intersection Capacity Utilization	57.6%	ICU Level of Service	B
Analysis Period (min)	15		

c Critical Lane Group

Movement	EBL	EBT	EBR	WBL	WBT	WBR	NBL	NBT	NBR	SBL	SBT	SBR
Lane Configurations												
Ideal Flow (vphpl)	1900	1900	1900	1900	1900	1900	1900	1900	1900	1900	1900	1900
Total Lost time (s)	4.0	4.0		4.0	4.0		4.0	4.0		4.0	4.0	
Lane Util. Factor	1.00	0.95		1.00	0.95		1.00	0.95		1.00	0.95	
Frpb, ped/bikes	1.00	0.97		1.00	0.95		1.00	0.99		1.00	0.93	
Flpb, ped/bikes	1.00	1.00		1.00	1.00		0.95	1.00		0.96	1.00	
Frt	1.00	0.96		1.00	0.97		1.00	0.99		1.00	0.94	
Flt Protected	0.95	1.00		0.95	1.00		0.95	1.00		0.95	1.00	
Satd. Flow (prot)	1770	3308		1770	3258		1690	3490		1696	3117	
Flt Permitted	0.95	1.00		0.95	1.00		0.29	1.00		0.42	1.00	
Satd. Flow (perm)	1770	3308		1770	3258		522	3490		742	3117	
Volume (vph)	127	316	100	56	383	112	113	504	29	105	480	294
Peak-hour factor, PHF	0.98	0.98	0.98	0.98	0.98	0.98	0.98	0.98	0.98	0.98	0.98	0.98
Adj. Flow (vph)	130	322	102	57	391	114	115	514	30	107	490	300
RTOR Reduction (vph)	0	36	0	0	34	0	0	4	0	0	95	0
Lane Group Flow (vph)	130	388	0	57	471	0	115	540	0	107	695	0
Confl. Peds. (#/hr)			100			100	100		100	100		100
Turn Type	Prot			Prot			Perm			Perm		
Protected Phases	7	4		3	8			2			6	
Permitted Phases							2			6		
Actuated Green, G (s)	9.2	22.0		5.1	17.9		44.4	44.4		44.4	44.4	
Effective Green, g (s)	9.7	21.5		5.6	17.4		45.9	45.9		45.9	45.9	
Actuated g/C Ratio	0.11	0.25		0.07	0.20		0.54	0.54		0.54	0.54	
Clearance Time (s)	4.5	3.5		4.5	3.5		5.5	5.5		5.5	5.5	
Vehicle Extension (s)	2.0	2.0		2.0	2.0		2.0	2.0		2.0	2.0	
Lane Grp Cap (vph)	202	837		117	667		282	1885		401	1683	
v/s Ratio Prot	c0.07	0.12		0.03	c0.14			0.15			c0.22	
v/s Ratio Perm							0.22			0.14		
v/c Ratio	0.64	0.46		0.49	0.71		0.41	0.29		0.27	0.41	
Uniform Delay, d1	36.0	26.9		38.3	31.4		11.5	10.6		10.5	11.6	
Progression Factor	1.00	1.00		1.00	1.00		1.00	1.00		1.18	1.33	
Incremental Delay, d2	5.2	0.1		1.2	2.8		4.3	0.4		1.5	0.7	
Delay (s)	41.2	27.0		39.5	34.2		15.9	11.0		13.9	16.1	
Level of Service	D	C		D	C		B	B		B	B	
Approach Delay (s)		30.3			34.7			11.9			15.8	
Approach LOS		C			C			B			B	

Intersection Summary			
HCM Average Control Delay	21.8	HCM Level of Service	C
HCM Volume to Capacity ratio	0.51		
Actuated Cycle Length (s)	85.0	Sum of lost time (s)	12.0
Intersection Capacity Utilization	69.8%	ICU Level of Service	C
Analysis Period (min)	15		

c Critical Lane Group

Movement	EBL	EBR	NBL	NBT	SBT	SBR
Lane Configurations						
Ideal Flow (vphpl)	1900	1900	1900	1900	1900	1900
Total Lost time (s)	4.0		4.0	4.0	4.0	
Lane Util. Factor	1.00		1.00	0.95	0.95	
Frpb, ped/bikes	0.91		1.00	1.00	0.94	
Flpb, ped/bikes	1.00		1.00	1.00	1.00	
Frt	0.91		1.00	1.00	0.98	
Flt Protected	0.98		0.95	1.00	1.00	
Satd. Flow (prot)	1521		1770	3539	3250	
Flt Permitted	0.98		0.95	1.00	1.00	
Satd. Flow (perm)	1521		1770	3539	3250	
Volume (vph)	42	92	89	1069	615	118
Peak-hour factor, PHF	0.96	0.96	0.96	0.96	0.96	0.96
Adj. Flow (vph)	44	96	93	1114	641	123
RTOR Reduction (vph)	87	0	0	0	11	0
Lane Group Flow (vph)	53	0	93	1114	753	0
Confl. Peds. (#/hr)	100	100	100			100
Turn Type			Prot			
Protected Phases	2		3	8	4	
Permitted Phases						
Actuated Green, G (s)	8.4		8.4	68.6	56.2	
Effective Green, g (s)	8.4		8.4	68.6	56.2	
Actuated g/C Ratio	0.10		0.10	0.81	0.66	
Clearance Time (s)	4.0		4.0	4.0	4.0	
Vehicle Extension (s)	3.0		3.0	3.0	3.0	
Lane Grp Cap (vph)	150		175	2856	2149	
v/s Ratio Prot	c0.04		c0.05	c0.31	0.23	
v/s Ratio Perm						
v/c Ratio	0.36		0.53	0.39	0.35	
Uniform Delay, d1	35.8		36.4	2.3	6.4	
Progression Factor	1.00		1.00	1.00	1.00	
Incremental Delay, d2	1.5		3.1	0.4	0.5	
Delay (s)	37.2		39.5	2.7	6.8	
Level of Service	D		D	A	A	
Approach Delay (s)	37.2			5.5	6.8	
Approach LOS	D			A	A	

Intersection Summary			
HCM Average Control Delay	8.1	HCM Level of Service	A
HCM Volume to Capacity ratio	0.39		
Actuated Cycle Length (s)	85.0	Sum of lost time (s)	8.0
Intersection Capacity Utilization	54.8%	ICU Level of Service	A
Analysis Period (min)	15		

c Critical Lane Group

APPENDIX E:
YEAR 2015 NO PROJCT CONDITIONS INTERSECTION LEVEL OF SERVICE CALCULATION WORKSHEETS

HCM Signalized Intersection Capacity Analysis
1: 52nd St. & Shattuck Ave.

2015 AM
1/11/2008

Movement	EBL	EBT	EBR	WBL	WBT	WBR	NBL	NBT	NBR	SBL	SBT	SBR
Lane Configurations												
Ideal Flow (vphpl)	1900	1900	1900	1900	1900	1900	1900	1900	1900	1900	1900	1900
Lane Width	12	12	12	12	12	12	16	16	16	16	16	16
Total Lost time (s)	4.0	4.0		4.0	4.0		2.0	2.0		2.0	2.0	
Lane Util. Factor	1.00	0.91		1.00	0.91		1.00	1.00		1.00	1.00	
Frpb, ped/bikes	1.00	0.99		1.00	0.99		1.00	0.99		1.00	0.98	
Flpb, ped/bikes	1.00	1.00		1.00	1.00		1.00	1.00		0.99	1.00	
Frt	1.00	0.97		1.00	0.98		1.00	0.97		1.00	0.94	
Flt Protected	0.95	1.00		0.95	1.00		0.95	1.00		0.95	1.00	
Satd. Flow (prot)	1770	4910		1770	4953		2006	2041		1984	1955	
Flt Permitted	0.95	1.00		0.95	1.00		0.10	1.00		0.46	1.00	
Satd. Flow (perm)	1770	4910		1770	4953		201	2041		954	1955	
Volume (vph)	300	950	200	90	1330	200	200	280	60	160	410	270
Peak-hour factor, PHF	0.95	0.95	0.95	0.95	0.95	0.95	0.95	0.95	0.95	0.95	0.95	0.95
Adj. Flow (vph)	316	1000	211	95	1400	211	211	295	63	168	432	284
RTOR Reduction (vph)	0	25	0	0	16	0	0	7	0	0	20	0
Lane Group Flow (vph)	316	1186	0	95	1595	0	211	351	0	168	696	0
Confl. Peds. (#/hr)			10	10		10	10		10	10		10
Turn Type	Prot			Prot			pm pt			Perm		
Protected Phases	7	4		3	8		5	2			6	
Permitted Phases							2			6		
Actuated Green, G (s)	17.0	49.4		11.6	44.0		48.5	48.5		39.5	39.5	
Effective Green, g (s)	17.0	49.4		11.6	44.0		49.0	49.0		40.0	40.0	
Actuated g/C Ratio	0.14	0.41		0.10	0.37		0.41	0.41		0.33	0.33	
Clearance Time (s)	4.0	4.0		4.0	4.0		4.0	2.5		2.5	2.5	
Vehicle Extension (s)	3.0	3.0		3.0	3.0		3.0	3.0		3.0	3.0	
Lane Grp Cap (vph)	251	2021		171	1816		187	833		318	652	
v/s Ratio Prot	c0.18	0.24		0.05	c0.32		c0.07	0.17			c0.36	
v/s Ratio Perm							0.39			0.18		
v/c Ratio	1.26	0.59		0.56	0.88		1.13	0.42		0.53	1.07	
Uniform Delay, d1	51.5	27.4		51.7	35.5		58.7	25.4		32.4	40.0	
Progression Factor	1.00	1.00		1.00	1.00		1.00	1.00		1.00	1.00	
Incremental Delay, d2	144.6	1.3		3.9	6.4		104.5	0.3		1.6	54.6	
Delay (s)	196.1	28.6		55.6	41.9		163.2	25.7		34.0	94.6	
Level of Service	F	C		E	D		F	C		C	F	
Approach Delay (s)		63.3			42.7			76.7			83.1	
Approach LOS		E			D			E			F	

Intersection Summary			
HCM Average Control Delay	61.1	HCM Level of Service	E
HCM Volume to Capacity ratio	1.01		
Actuated Cycle Length (s)	120.0	Sum of lost time (s)	12.0
Intersection Capacity Utilization	109.8%	ICU Level of Service	H
Analysis Period (min)	15		
c Critical Lane Group			

HCM Signalized Intersection Capacity Analysis
2: 52nd St. & Telegraph Ave.

2015 AM
1/11/2008

Movement	EBL	EBT	EBR	WBL	WBT	WBR	NBL	NBT	NBR	SBL	SBT	SBR
Lane Configurations												
Ideal Flow (vphpl)	1900	1900	1900	1900	1900	1900	1900	1900	1900	1900	1900	1900
Total Lost time (s)		4.0		4.0	4.0			4.0		4.0	4.0	
Lane Util. Factor		1.00		0.95	0.95			0.95		1.00	0.95	
Frpb, ped/bikes		1.00		1.00	0.99			0.99		1.00	0.96	
Flpb, ped/bikes		1.00		1.00	1.00			1.00		1.00	1.00	
Frt		0.95		1.00	0.91			0.98		1.00	0.96	
Flt Protected		0.98		0.95	1.00			1.00		0.95	1.00	
Satd. Flow (prot)		1748		1681	1596			3421		1770	3266	
Flt Permitted		0.48		0.74	1.00			0.93		0.95	1.00	
Satd. Flow (perm)		846		1302	1596			3197		1770	3266	
Volume (vph)	10	10	10	170	110	160	10	1140	230	100	1140	450
Peak-hour factor, PHF	0.95	0.95	0.95	0.95	0.95	0.95	0.95	0.95	0.95	0.95	0.95	0.95
Adj. Flow (vph)	11	11	11	179	116	168	11	1200	242	105	1200	474
RTOR Reduction (vph)	0	10	0	0	68	0	0	13	0	0	33	0
Lane Group Flow (vph)	0	23	0	179	216	0	0	1440	0	105	1641	0
Confl. Peds. (#/hr)	4					4	44		12	12		44
Turn Type	Perm			Perm			Perm			Prot		
Protected Phases		7			8			2		1	6	
Permitted Phases	7			8			2					
Actuated Green, G (s)		5.1		16.0	16.0			43.2		7.7	55.4	
Effective Green, g (s)		5.6		16.5	16.5			43.7		8.2	55.9	
Actuated g/C Ratio		0.06		0.18	0.18			0.49		0.09	0.62	
Clearance Time (s)		4.5		4.5	4.5			4.5		4.5	4.5	
Vehicle Extension (s)		2.0		2.0	2.0			2.0		2.0	2.0	
Lane Grp Cap (vph)		53		239	293			1552		161	2029	
v/s Ratio Prot										0.06	c0.50	
v/s Ratio Perm		c0.03		c0.14	0.14			c0.45				
v/c Ratio		0.43		0.75	0.74			0.93		0.65	0.81	
Uniform Delay, d1		40.7		34.8	34.7			21.7		39.5	13.0	
Progression Factor		1.00		1.00	1.00			1.03		1.00	1.00	
Incremental Delay, d2		2.0		10.7	8.1			4.7		7.0	3.6	
Delay (s)		42.7		45.5	42.8			27.1		46.5	16.6	
Level of Service		D		D	D			C		D	B	
Approach Delay (s)		42.7			43.8			27.1			18.4	
Approach LOS		D			D			C			B	

Intersection Summary			
HCM Average Control Delay	25.1	HCM Level of Service	C
HCM Volume to Capacity ratio	0.85		
Actuated Cycle Length (s)	90.0	Sum of lost time (s)	16.0
Intersection Capacity Utilization	107.3%	ICU Level of Service	G
Analysis Period (min)	15		
c Critical Lane Group			

Movement	EBL	EBT	EBR	WBL	WBT	WBR	NBL	NBT	NBR	SBL	SBT	SBR
Lane Configurations												
Ideal Flow (vphpl)	1900	1900	1900	1900	1900	1900	1900	1900	1900	1900	1900	1900
Total Lost time (s)	4.0	4.0		4.0	4.0		4.0	4.0		4.0	4.0	
Lane Util. Factor	0.97	0.95		1.00	0.95		1.00	0.95		1.00	0.95	
Frpb, ped/bikes	1.00	0.99		1.00	0.99		1.00	0.99		1.00	0.98	
Flpb, ped/bikes	1.00	1.00		1.00	1.00		1.00	1.00		1.00	1.00	
Frt	1.00	0.98		1.00	0.95		1.00	0.98		1.00	0.97	
Flt Protected	0.95	1.00		0.95	1.00		0.95	1.00		0.95	1.00	
Satd. Flow (prot)	3433	3438		1770	3356		1770	3431		1770	3393	
Flt Permitted	0.95	1.00		0.95	1.00		0.95	1.00		0.95	1.00	
Satd. Flow (perm)	3433	3438		1770	3356		1770	3431		1770	3393	
Volume (vph)	460	590	90	120	700	310	110	640	120	280	870	180
Peak-hour factor, PHF	0.96	0.96	0.96	0.96	0.96	0.96	0.96	0.96	0.96	0.96	0.96	0.96
Adj. Flow (vph)	479	615	94	125	729	323	115	667	125	292	906	188
RTOR Reduction (vph)	0	13	0	0	56	0	0	17	0	0	19	0
Lane Group Flow (vph)	479	696	0	125	996	0	115	775	0	292	1075	0
Confl. Peds. (#/hr)	6		24	24		6			28			36
Turn Type	Prot			Prot			Prot			Prot		
Protected Phases	7	4		3	8		5	2		1	6	
Permitted Phases												
Actuated Green, G (s)	13.0	28.9		9.6	25.5		8.1	23.5		11.0	26.4	
Effective Green, g (s)	12.5	29.9		9.1	26.5		7.6	24.5		10.5	27.4	
Actuated g/C Ratio	0.14	0.33		0.10	0.29		0.08	0.27		0.12	0.30	
Clearance Time (s)	3.5	5.0		3.5	5.0		3.5	5.0		3.5	5.0	
Vehicle Extension (s)	2.0	2.0		2.0	2.0		2.0	2.0		2.0	2.0	
Lane Grp Cap (vph)	477	1142		179	988		149	934		207	1033	
v/s Ratio Prot	c0.14	c0.20		0.07	c0.30		0.06	0.23		c0.17	c0.32	
v/s Ratio Perm												
v/c Ratio	1.00	0.61		0.70	1.01		0.77	0.83		1.41	1.04	
Uniform Delay, d1	38.8	25.2		39.1	31.8		40.4	30.8		39.8	31.3	
Progression Factor	1.00	1.00		1.00	1.00		1.00	1.00		1.14	0.87	
Incremental Delay, d2	42.2	0.6		9.2	30.7		19.9	8.4		201.2	33.2	
Delay (s)	81.0	25.8		48.3	62.4		60.2	39.2		246.7	60.5	
Level of Service	F	C		D	E		E	D		F	E	
Approach Delay (s)		48.1			60.9			41.9			99.7	
Approach LOS		D			E			D			F	

Intersection Summary			
HCM Average Control Delay	65.5	HCM Level of Service	E
HCM Volume to Capacity ratio	1.13		
Actuated Cycle Length (s)	90.0	Sum of lost time (s)	20.0
Intersection Capacity Utilization	93.4%	ICU Level of Service	F
Analysis Period (min)	15		

c Critical Lane Group

Movement	EBL	EBT	EBR	WBL	WBT	WBR	NBL	NBT	NBR	SBL	SBT	SBR
Lane Configurations												
Ideal Flow (vphpl)	1900	1900	1900	1900	1900	1900	1900	1900	1900	1900	1900	1900
Total Lost time (s)		4.0						4.0		4.0	4.0	
Lane Util. Factor		1.00						0.95		0.97	0.95	
Frt		0.86						0.93		1.00	0.98	
Flt Protected		1.00						1.00		0.95	1.00	
Satd. Flow (prot)		1611						3292		3433	3474	
Flt Permitted		1.00						0.94		0.95	1.00	
Satd. Flow (perm)		1611						3100		3433	3474	
Volume (vph)	0	0	10	0	0	0	10	340	300	1600	430	60
Peak-hour factor, PHF	0.95	0.95	0.95	0.95	0.95	0.95	0.95	0.95	0.95	0.95	0.95	0.95
Adj. Flow (vph)	0	0	11	0	0	0	11	358	316	1684	453	63
RTOR Reduction (vph)	0	11	0	0	0	0	0	26	0	0	0	0
Lane Group Flow (vph)	0	0	0	0	0	0	0	659	0	1684	516	0
Turn Type										Prot		
Protected Phases								2		1	6	
Permitted Phases												
Actuated Green, G (s)		0.0						8.0		29.0	45.0	
Effective Green, g (s)		0.0						8.0		29.0	45.0	
Actuated g/C Ratio		0.00						0.18		0.64	1.00	
Clearance Time (s)								4.0		4.0	2.0	
Lane Grp Cap (vph)		0						551		2212	3474	
v/s Ratio Prot										c0.49	0.15	
v/s Ratio Perm								c0.21				
v/c Ratio		0.00						9.88dr		0.76	0.15	
Uniform Delay, d1		22.5						18.5		5.6	0.0	
Progression Factor		1.00						0.78		1.00	1.00	
Incremental Delay, d2		0.0						103.8		2.5	0.1	
Delay (s)		22.5						118.3		8.1	0.1	
Level of Service		C						F		A	A	
Approach Delay (s)		22.5			0.0			118.3			6.2	
Approach LOS		C			A			F			A	

Intersection Summary			
HCM Average Control Delay	32.8	HCM Level of Service	C
HCM Volume to Capacity ratio	0.86		
Actuated Cycle Length (s)	45.0	Sum of lost time (s)	8.0
Intersection Capacity Utilization	78.3%	ICU Level of Service	D
Analysis Period (min)	15		

dr Defacto Right Lane. Recode with 1 though lane as a right lane.
c Critical Lane Group

Movement	EBL	EBT	EBR	WBL	WBT	WBR	NBL	NBT	NBR	SBL	SBT	SBR
Lane Configurations												
Ideal Flow (vphpl)	1900	1900	1900	1900	1900	1900	1900	1900	1900	1900	1900	1900
Total Lost time (s)		4.0			4.0			4.0			4.0	
Lane Util. Factor		1.00			1.00			0.95			0.95	
Frpb, ped/bikes		0.97			0.96			0.98			0.99	
Flpb, ped/bikes		0.98			0.97			1.00			1.00	
Frt		0.98			0.94			0.98			0.99	
Flt Protected		0.98			0.99			1.00			1.00	
Satd. Flow (prot)		1695			1605			3393			3471	
Flt Permitted		0.83			0.87			0.91			0.88	
Satd. Flow (perm)		1438			1419			3083			3070	
Volume (vph)	70	80	30	60	60	90	30	470	80	50	580	30
Peak-hour factor, PHF	0.95	0.95	0.95	0.95	0.95	0.95	0.95	0.95	0.95	0.95	0.95	0.95
Adj. Flow (vph)	74	84	32	63	63	95	32	495	84	53	611	32
RTOR Reduction (vph)	0	16	0	0	60	0	0	28	0	0	8	0
Lane Group Flow (vph)	0	174	0	0	161	0	0	583	0	0	688	0
Confl. Peds. (#/hr)	100		100	100		100	100		100	100		100
Turn Type	Perm			Perm			Perm			Perm		
Protected Phases		4			8			2			6	
Permitted Phases	4			8			2			6		
Actuated Green, G (s)		15.0			15.0			22.0			22.0	
Effective Green, g (s)		15.0			15.0			22.0			22.0	
Actuated g/C Ratio		0.33			0.33			0.49			0.49	
Clearance Time (s)		4.0			4.0			4.0			4.0	
Lane Grp Cap (vph)		479			473			1507			1501	
v/s Ratio Prot												
v/s Ratio Perm		c0.12			0.11			0.19			c0.22	
v/c Ratio		0.36			0.34			0.39			0.46	
Uniform Delay, d1		11.4			11.3			7.2			7.6	
Progression Factor		1.00			1.00			1.00			1.00	
Incremental Delay, d2		2.1			2.0			0.8			1.0	
Delay (s)		13.5			13.2			8.0			8.6	
Level of Service		B			B			A			A	
Approach Delay (s)		13.5			13.2			8.0			8.6	
Approach LOS		B			B			A			A	

Intersection Summary			
HCM Average Control Delay	9.5	HCM Level of Service	A
HCM Volume to Capacity ratio	0.42		
Actuated Cycle Length (s)	45.0	Sum of lost time (s)	8.0
Intersection Capacity Utilization	63.8%	ICU Level of Service	B
Analysis Period (min)	15		
c Critical Lane Group			

Movement	EBL	EBT	EBR	WBL	WBT	WBR	NBL	NBT	NBR	SBL	SBT	SBR
Lane Configurations												
Ideal Flow (vphpl)	1900	1900	1900	1900	1900	1900	1900	1900	1900	1900	1900	1900
Total Lost time (s)		4.0			4.0			4.0			4.0	
Lane Util. Factor		1.00			1.00			0.95			0.91	
Frpb, ped/bikes		0.95			0.95			0.98			0.98	
Flpb, ped/bikes		0.97			0.98			1.00			1.00	
Frt		0.96			0.96			0.99			0.99	
Flt Protected		0.98			0.99			1.00			1.00	
Satd. Flow (prot)		1626			1650			3443			4928	
Flt Permitted		0.79			0.83			0.84			0.82	
Satd. Flow (perm)		1302			1389			2893			4054	
Volume (vph)	70	80	70	40	70	50	30	1000	60	70	1530	100
Peak-hour factor, PHF	0.95	0.95	0.95	0.95	0.95	0.95	0.95	0.95	0.95	0.95	0.95	0.95
Adj. Flow (vph)	74	84	74	42	74	53	32	1053	63	74	1611	105
RTOR Reduction (vph)	0	6	0	0	26	0	0	3	0	0	5	0
Lane Group Flow (vph)	0	226	0	0	143	0	0	1145	0	0	1785	0
Confl. Peds. (#/hr)	100		100	100		100	100		100	100		100
Turn Type	Perm			Perm			Perm			Perm		
Protected Phases		4			4			2			6	
Permitted Phases	4			4			2			6		
Actuated Green, G (s)		16.6			16.6			59.4			59.4	
Effective Green, g (s)		17.1			17.1			59.9			59.9	
Actuated g/C Ratio		0.20			0.20			0.70			0.70	
Clearance Time (s)		4.5			4.5			4.5			4.5	
Vehicle Extension (s)		2.0			2.0			2.0			2.0	
Lane Grp Cap (vph)		262			279			2039			2857	
v/s Ratio Prot												
v/s Ratio Perm		c0.17			0.10			0.40			c0.44	
v/c Ratio		0.86			0.51			0.56			0.62	
Uniform Delay, d1		32.8			30.2			6.1			6.6	
Progression Factor		1.00			1.00			1.00			1.00	
Incremental Delay, d2		23.2			0.7			1.1			1.0	
Delay (s)		56.0			30.9			7.3			7.7	
Level of Service		E			C			A			A	
Approach Delay (s)		56.0			30.9			7.3			7.7	
Approach LOS		E			C			A			A	

Intersection Summary			
HCM Average Control Delay	12.1	HCM Level of Service	B
HCM Volume to Capacity ratio	0.68		
Actuated Cycle Length (s)	85.0	Sum of lost time (s)	8.0
Intersection Capacity Utilization	101.9%	ICU Level of Service	G
Analysis Period (min)	15		
c Critical Lane Group			

Movement	EBL	EBT	EBR	WBL	WBT	WBR	NBL	NBT	NBR	SBL	SBT	SBR
Lane Configurations												
Ideal Flow (vphpl)	1900	1900	1900	1900	1900	1900	1900	1900	1900	1900	1900	1900
Total Lost time (s)	4.0	4.0		4.0	4.0		4.0	4.0		4.0	4.0	
Lane Util. Factor	1.00	0.95		1.00	0.95		1.00	1.00		1.00	1.00	
Frpb, ped/bikes	1.00	1.00		1.00	0.99		1.00	0.99		1.00	1.00	
Flpb, ped/bikes	0.99	1.00		0.99	1.00		1.00	1.00		0.98	1.00	
Frt	1.00	0.97		1.00	0.99		1.00	0.98		1.00	0.99	
Flt Protected	0.95	1.00		0.95	1.00		0.95	1.00		0.95	1.00	
Satd. Flow (prot)	1746	3430		1759	3464		1767	1817		1736	1841	
Flt Permitted	0.17	1.00		0.37	1.00		0.44	1.00		0.60	1.00	
Satd. Flow (perm)	320	3430		691	3464		810	1817		1092	1841	
Volume (vph)	30	370	80	70	670	70	90	200	30	80	400	30
Peak-hour factor, PHF	0.95	0.95	0.95	0.95	0.95	0.95	0.95	0.95	0.95	0.95	0.95	0.95
Adj. Flow (vph)	32	389	84	74	705	74	95	211	32	84	421	32
RTOR Reduction (vph)	0	23	0	0	10	0	0	7	0	0	3	0
Lane Group Flow (vph)	32	450	0	74	769	0	95	236	0	84	450	0
Confl. Peds. (#/hr)	30		12	12		30	6		54	54		6
Turn Type	Perm			Perm			Perm			Perm		
Protected Phases		4			8			2			6	
Permitted Phases	4			8			2			6		
Actuated Green, G (s)	24.0	24.0		24.0	24.0		49.5	49.5		49.5	49.5	
Effective Green, g (s)	23.0	23.0		23.0	23.0		49.0	49.0		49.0	49.0	
Actuated g/C Ratio	0.29	0.29		0.29	0.29		0.61	0.61		0.61	0.61	
Clearance Time (s)	3.0	3.0		3.0	3.0		3.5	3.5		3.5	3.5	
Lane Grp Cap (vph)	92	986		199	996		496	1113		669	1128	
v/s Ratio Prot		0.13			c0.22			0.13			c0.24	
v/s Ratio Perm	0.10			0.11			0.12			0.08		
v/c Ratio	0.35	0.46		0.37	0.77		0.19	0.21		0.13	0.40	
Uniform Delay, d1	22.6	23.4		22.7	26.1		6.8	6.9		6.5	7.9	
Progression Factor	1.00	1.00		0.88	0.92		1.00	1.00		1.00	1.00	
Incremental Delay, d2	10.1	1.5		4.9	5.4		0.9	0.4		0.4	1.1	
Delay (s)	32.7	24.9		24.9	29.4		7.7	7.3		6.9	9.0	
Level of Service	C	C		C	C		A	A		A	A	
Approach Delay (s)		25.4			29.0			7.4			8.7	
Approach LOS		C			C			A			A	

Intersection Summary			
HCM Average Control Delay	20.0	HCM Level of Service	C
HCM Volume to Capacity ratio	0.52		
Actuated Cycle Length (s)	80.0	Sum of lost time (s)	8.0
Intersection Capacity Utilization	82.7%	ICU Level of Service	E
Analysis Period (min)	15		
c Critical Lane Group			

Movement	EBL	EBT	EBR	WBL	WBT	WBR	NBL	NBT	NBR	SBL	SBT	SBR
Lane Configurations												
Ideal Flow (vphpl)	1900	1900	1900	1900	1900	1900	1900	1900	1900	1900	1900	1900
Total Lost time (s)	4.0	4.0		4.0	4.0			4.0			4.0	
Lane Util. Factor	1.00	0.95		1.00	0.95			0.95			0.95	
Frpb, ped/bikes	1.00	0.99		1.00	1.00			1.00			1.00	
Flpb, ped/bikes	1.00	1.00		0.98	1.00			1.00			1.00	
Frt	1.00	0.98		1.00	0.99			0.97			0.98	
Flt Protected	0.95	1.00		0.95	1.00			0.99			0.99	
Satd. Flow (prot)	1763	3424		1739	3514			3390			3421	
Flt Permitted	0.29	1.00		0.43	1.00			0.79			0.85	
Satd. Flow (perm)	533	3424		786	3514			2719			2919	
Volume (vph)	30	400	80	50	700	30	70	170	50	60	240	50
Peak-hour factor, PHF	0.95	0.95	0.95	0.95	0.95	0.95	0.95	0.95	0.95	0.95	0.95	0.95
Adj. Flow (vph)	32	421	84	53	737	32	74	179	53	63	253	53
RTOR Reduction (vph)	0	21	0	0	4	0	0	22	0	0	17	0
Lane Group Flow (vph)	32	484	0	53	765	0	0	284	0	0	352	0
Confl. Peds. (#/hr)	18		54	54		18	4		18	18		4
Turn Type	Perm			Perm			Perm			Perm		
Protected Phases		4			8			2			6	
Permitted Phases	4			8			2			6		
Actuated Green, G (s)	38.0	38.0		38.0	38.0			32.0			32.0	
Effective Green, g (s)	39.0	39.0		39.0	39.0			33.0			33.0	
Actuated g/C Ratio	0.49	0.49		0.49	0.49			0.41			0.41	
Clearance Time (s)	5.0	5.0		5.0	5.0			5.0			5.0	
Lane Grp Cap (vph)	260	1669		383	1713			1122			1204	
v/s Ratio Prot		0.14			c0.22							
v/s Ratio Perm	0.06			0.07				0.10			c0.12	
v/c Ratio	0.12	0.29		0.14	0.45			0.25			0.29	
Uniform Delay, d1	11.2	12.2		11.3	13.4			15.4			15.7	
Progression Factor	0.97	1.04		1.41	1.52			0.64			1.00	
Incremental Delay, d2	0.9	0.4		0.7	0.8			0.5			0.6	
Delay (s)	11.7	13.1		16.6	21.2			10.4			16.3	
Level of Service	B	B		B	C			B			B	
Approach Delay (s)		13.0			20.9			10.4			16.3	
Approach LOS		B			C			B			B	

Intersection Summary			
HCM Average Control Delay	16.4	HCM Level of Service	B
HCM Volume to Capacity ratio	0.38		
Actuated Cycle Length (s)	80.0	Sum of lost time (s)	8.0
Intersection Capacity Utilization	73.3%	ICU Level of Service	D
Analysis Period (min)	15		
c Critical Lane Group			

Movement	EBL	EBT	EBR	WBL	WBT	WBR	NBL	NBT	NBR	SBL	SBT	SBR
Lane Configurations												
Ideal Flow (vphpl)	1900	1900	1900	1900	1900	1900	1900	1900	1900	1900	1900	1900
Total Lost time (s)	4.0	4.0		4.0	4.0			4.0			4.0	
Lane Util. Factor	1.00	0.95		1.00	0.95			0.95			0.95	
Frpb, ped/bikes	1.00	1.00		1.00	1.00			0.99			1.00	
Flpb, ped/bikes	1.00	1.00		0.98	1.00			1.00			1.00	
Frt	1.00	0.99		1.00	0.98			0.97			0.99	
Flt Protected	0.95	1.00		0.95	1.00			0.99			0.99	
Satd. Flow (prot)	1763	3479		1733	3472			3386			3450	
Flt Permitted	0.29	1.00		0.44	1.00			0.87			0.74	
Satd. Flow (perm)	531	3479		799	3472			2952			2585	
Volume (vph)	40	440	40	70	680	80	40	260	80	120	340	30
Peak-hour factor, PHF	0.96	0.96	0.96	0.96	0.96	0.96	0.96	0.96	0.96	0.96	0.96	0.96
Adj. Flow (vph)	42	458	42	73	708	83	42	271	83	125	354	31
RTOR Reduction (vph)	0	9	0	0	11	0	0	30	0	0	6	0
Lane Group Flow (vph)	42	491	0	73	780	0	0	366	0	0	504	0
Confl. Peds. (#/hr)	13		71	71		13	22		22	22		22
Turn Type	Perm			Perm			Perm			Perm		
Protected Phases		4			8			2			6	
Permitted Phases	4			8			2			6		
Actuated Green, G (s)	41.5	41.5		41.5	41.5			32.0			32.0	
Effective Green, g (s)	41.0	41.0		41.0	41.0			31.0			31.0	
Actuated g/C Ratio	0.51	0.51		0.51	0.51			0.39			0.39	
Clearance Time (s)	3.5	3.5		3.5	3.5			3.0			3.0	
Lane Grp Cap (vph)	272	1783		409	1779			1144			1002	
v/s Ratio Prot		0.14			c0.22							
v/s Ratio Perm	0.08			0.09				0.12			c0.19	
v/c Ratio	0.15	0.28		0.18	0.44			0.32			0.50	
Uniform Delay, d1	10.3	11.1		10.5	12.3			17.1			18.6	
Progression Factor	1.27	1.31		1.00	1.00			0.64			1.00	
Incremental Delay, d2	1.2	0.4		1.0	0.8			0.7			1.8	
Delay (s)	14.3	14.9		11.4	13.0			11.6			20.4	
Level of Service	B	B		B	B			B			C	
Approach Delay (s)		14.8			12.9			11.6			20.4	
Approach LOS		B			B			B			C	

Intersection Summary			
HCM Average Control Delay	14.8	HCM Level of Service	B
HCM Volume to Capacity ratio	0.47		
Actuated Cycle Length (s)	80.0	Sum of lost time (s)	8.0
Intersection Capacity Utilization	100.5%	ICU Level of Service	G
Analysis Period (min)	15		
c Critical Lane Group			

Movement	EBT	EBR	WBL	WBT	NBL	NBR
Lane Configurations						
Ideal Flow (vphpl)	1900	1900	1900	1900	1900	1900
Total Lost time (s)	4.0		4.0	4.0		
Lane Util. Factor	0.95		1.00	0.95		
Frpb, ped/bikes	0.97		1.00	1.00		
Flpb, ped/bikes	1.00		1.00	1.00		
Frt	0.99		1.00	1.00		
Flt Protected	1.00		0.95	1.00		
Satd. Flow (prot)	3385		1770	3539		
Flt Permitted	1.00		0.95	1.00		
Satd. Flow (perm)	3385		1770	3539		
Volume (vph)	560	60	100	810	0	0
Peak-hour factor, PHF	0.95	0.95	0.95	0.95	0.95	0.95
Adj. Flow (vph)	589	63	105	853	0	0
RTOR Reduction (vph)	13	0	0	0	0	0
Lane Group Flow (vph)	639	0	105	853	0	0
Confl. Peds. (#/hr)		146	266			
Turn Type			Prot			
Protected Phases	4		3	8		
Permitted Phases						
Actuated Green, G (s)	22.0		30.0	60.0		
Effective Green, g (s)	22.0		30.0	60.0		
Actuated g/C Ratio	0.37		0.50	1.00		
Clearance Time (s)	4.0		4.0	4.0		
Lane Grp Cap (vph)	1241		885	3539		
v/s Ratio Prot	c0.19		0.06	c0.24		
v/s Ratio Perm						
v/c Ratio	0.51		0.12	0.24		
Uniform Delay, d1	14.8		8.0	0.0		
Progression Factor	1.00		1.00	1.00		
Incremental Delay, d2	1.5		0.3	0.2		
Delay (s)	16.4		8.2	0.2		
Level of Service	B		A	A		
Approach Delay (s)	16.4			1.0	0.0	
Approach LOS	B			A	A	

Intersection Summary			
HCM Average Control Delay	7.2	HCM Level of Service	A
HCM Volume to Capacity ratio	0.35		
Actuated Cycle Length (s)	60.0	Sum of lost time (s)	4.0
Intersection Capacity Utilization	30.3%	ICU Level of Service	A
Analysis Period (min)	15		
c Critical Lane Group			

Movement	EBT	EBR	WBL	WBT	NBL	NBR
Lane Configurations						
Sign Control	Free			Free	Stop	
Grade	0%			0%	0%	
Volume (veh/h)	540	20	0	910	0	20
Peak Hour Factor	0.95	0.95	0.95	0.95	0.95	0.95
Hourly flow rate (vph)	568	21	0	958	0	21
Pedestrians				123	123	
Lane Width (ft)				12.0	12.0	
Walking Speed (ft/s)				4.0	4.0	
Percent Blockage				10	10	
Right turn flare (veh)						
Median type					None	
Median storage veh)						
Upstream signal (ft)	81			406		
pX, platoon unblocked			0.86		0.92	0.86
vC, conflicting volume			712		1181	541
vC1, stage 1 conf vol						
vC2, stage 2 conf vol						
vCu, unblocked vol			498		694	298
tC, single (s)			4.1		6.8	6.9
tC, 2 stage (s)						
tF (s)			2.2		3.5	3.3
p0 queue free %			100		100	96
cM capacity (veh/h)			817		312	482

Direction, Lane #	EB 1	EB 2	WB 1	WB 2	NB 1
Volume Total	379	211	479	479	21
Volume Left	0	0	0	0	0
Volume Right	0	21	0	0	21
cSH	1700	1700	1700	1700	482
Volume to Capacity	0.22	0.12	0.28	0.28	0.04
Queue Length 95th (ft)	0	0	0	0	3
Control Delay (s)	0.0	0.0	0.0	0.0	12.8
Lane LOS					B
Approach Delay (s)	0.0		0.0		12.8
Approach LOS					B

Intersection Summary			
Average Delay		0.2	
Intersection Capacity Utilization		45.0%	ICU Level of Service A
Analysis Period (min)		15	

Movement	EBT	EBR	WBL	WBT	NBL	NBR
Lane Configurations						
Sign Control	Free			Free	Stop	
Grade	0%			0%	0%	
Volume (veh/h)	550	10	0	910	0	60
Peak Hour Factor	0.96	0.96	0.96	0.96	0.96	0.96
Hourly flow rate (vph)	573	10	0	948	0	62
Pedestrians				123	123	
Lane Width (ft)				12.0	12.0	
Walking Speed (ft/s)				4.0	4.0	
Percent Blockage				10	10	
Right turn flare (veh)						
Median type					None	
Median storage veh)						
Upstream signal (ft)	298			189		
pX, platoon unblocked			0.88		0.92	0.88
vC, conflicting volume			706		1175	538
vC1, stage 1 conf vol						
vC2, stage 2 conf vol						
vCu, unblocked vol			531		712	340
tC, single (s)			4.1		6.8	6.9
tC, 2 stage (s)						
tF (s)			2.2		3.5	3.3
p0 queue free %			100		100	87
cM capacity (veh/h)			816		302	466

Direction, Lane #	EB 1	EB 2	WB 1	WB 2	NB 1
Volume Total	382	201	474	474	62
Volume Left	0	0	0	0	0
Volume Right	0	10	0	0	62
cSH	1700	1700	1700	1700	466
Volume to Capacity	0.22	0.12	0.28	0.28	0.13
Queue Length 95th (ft)	0	0	0	0	12
Control Delay (s)	0.0	0.0	0.0	0.0	13.9
Lane LOS					B
Approach Delay (s)	0.0		0.0		13.9
Approach LOS					B

Intersection Summary			
Average Delay		0.5	
Intersection Capacity Utilization		45.0%	ICU Level of Service A
Analysis Period (min)		15	

Movement	EBL	EBT	EBR	WBL	WBT	WBR	NBL	NBT	NBR	SBL	SBT	SBR
Lane Configurations												
Ideal Flow (vphpl)	1900	1900	1900	1900	1900	1900	1900	1900	1900	1900	1900	1900
Total Lost time (s)	4.0	4.0		4.0	4.0		4.0	4.0		4.0	4.0	
Lane Util. Factor	1.00	0.95		1.00	0.95		1.00	0.95		1.00	0.95	
Frpb, ped/bikes	1.00	0.95		1.00	0.98		1.00	0.99		1.00	0.97	
Flpb, ped/bikes	0.95	1.00		0.93	1.00		1.00	1.00		1.00	1.00	
Frt	1.00	0.96		1.00	0.98		1.00	0.99		1.00	0.96	
Flt Protected	0.95	1.00		0.95	1.00		0.95	1.00		0.95	1.00	
Satd. Flow (prot)	1681	3245		1637	3406		1770	3477		1770	3319	
Flt Permitted	0.27	1.00		0.36	1.00		0.95	1.00		0.95	1.00	
Satd. Flow (perm)	479	3245		626	3406		1770	3477		1770	3319	
Volume (vph)	140	350	120	80	520	70	110	450	30	140	900	280
Peak-hour factor, PHF	0.95	0.95	0.95	0.95	0.95	0.95	0.95	0.95	0.95	0.95	0.95	0.95
Adj. Flow (vph)	147	368	126	84	547	74	116	474	32	147	947	295
RTOR Reduction (vph)	0	40	0	0	12	0	0	5	0	0	31	0
Lane Group Flow (vph)	147	454	0	84	609	0	116	501	0	147	1211	0
Confl. Peds. (#/hr)	72		137	137		72			58	58		92
Turn Type	Perm			Perm			Prot			Prot		
Protected Phases		4			8		5	2		1	6	
Permitted Phases	4			8								
Actuated Green, G (s)	25.5	25.5		25.5	25.5		8.2	35.1		10.9	37.8	
Effective Green, g (s)	26.0	26.0		26.0	26.0		8.7	35.6		11.4	38.3	
Actuated g/C Ratio	0.31	0.31		0.31	0.31		0.10	0.42		0.13	0.45	
Clearance Time (s)	4.5	4.5		4.5	4.5		4.5	4.5		4.5	4.5	
Vehicle Extension (s)	2.0	2.0		2.0	2.0		2.0	2.0		2.0	2.0	
Lane Grp Cap (vph)	147	993		191	1042		181	1456		237	1496	
v/s Ratio Prot		0.14			0.18		0.07	0.14		c0.08	c0.36	
v/s Ratio Perm	c0.31			0.13								
v/c Ratio	1.00	0.46		0.44	0.58		0.64	0.34		0.62	0.81	
Uniform Delay, d1	29.5	23.8		23.7	24.9		36.6	16.8		34.8	20.2	
Progression Factor	1.00	1.00		1.00	1.00		0.89	1.30		1.00	1.00	
Incremental Delay, d2	74.2	0.1		0.6	0.5		5.1	0.6		3.6	4.8	
Delay (s)	103.7	23.9		24.2	25.5		37.9	22.3		38.4	25.0	
Level of Service	F	C		C	C		D	C		D	C	
Approach Delay (s)		42.2			25.3			25.2			26.4	
Approach LOS		D			C			C			C	

Intersection Summary			
HCM Average Control Delay	29.0	HCM Level of Service	C
HCM Volume to Capacity ratio	0.87		
Actuated Cycle Length (s)	85.0	Sum of lost time (s)	12.0
Intersection Capacity Utilization	79.6%	ICU Level of Service	D
Analysis Period (min)	15		

c Critical Lane Group

Movement	EBL	EBR	NBL	NBT	SBT	SBR
Lane Configurations						
Sign Control	Stop			Free	Free	
Grade	0%			0%	0%	
Volume (veh/h)	10	20	40	610	1050	30
Peak Hour Factor	0.95	0.95	0.95	0.95	0.95	0.95
Hourly flow rate (vph)	11	21	42	642	1105	32
Pedestrians	100			100	100	
Lane Width (ft)	12.0			12.0	12.0	
Walking Speed (ft/s)	4.0			4.0	4.0	
Percent Blockage	8			8	8	
Right turn flare (veh)						
Median type	None					
Median storage veh)						
Upstream signal (ft)				396	625	
pX, platoon unblocked	0.75	0.75	0.75			
vC, conflicting volume	1726	768	1237			
vC1, stage 1 conf vol						
vC2, stage 2 conf vol						
vCu, unblocked vol	1593	355	981			
tC, single (s)	6.8	6.9	4.1			
tC, 2 stage (s)						
tF (s)	3.5	3.3	2.2			
p0 queue free %	81	95	91			
cM capacity (veh/h)	57	403	480			

Direction, Lane #	EB 1	NB 1	NB 2	NB 3	SB 1	SB 2
Volume Total	32	42	321	321	737	400
Volume Left	11	42	0	0	0	0
Volume Right	21	0	0	0	0	32
cSH	133	480	1700	1700	1700	1700
Volume to Capacity	0.24	0.09	0.19	0.19	0.43	0.24
Queue Length 95th (ft)	22	7	0	0	0	0
Control Delay (s)	40.4	13.2	0.0	0.0	0.0	0.0
Lane LOS	E	B				
Approach Delay (s)	40.4	0.8			0.0	
Approach LOS	E					

Intersection Summary			
Average Delay	1.0		
Intersection Capacity Utilization	53.0%	ICU Level of Service	A
Analysis Period (min)	15		

Movement	WBL	WBR	NBT	NBR	SBL	SBT
Lane Configurations						
Sign Control	Stop		Free			Free
Grade	0%		0%			0%
Volume (veh/h)	10	30	620	10	20	1050
Peak Hour Factor	0.95	0.95	0.95	0.95	0.95	0.95
Hourly flow rate (vph)	11	32	653	11	21	1105
Pedestrians	34		33			34
Lane Width (ft)	12.0		12.0			12.0
Walking Speed (ft/s)	4.0		4.0			4.0
Percent Blockage	3		3			3
Right turn flare (veh)						
Median type	None					
Median storage veh)						
Upstream signal (ft)			230			791
pX, platoon unblocked	0.82	0.95			0.95	
vC, conflicting volume	1320	400			697	
vC1, stage 1 conf vol						
vC2, stage 2 conf vol						
vCu, unblocked vol	997	322			634	
tC, single (s)	6.8	6.9			4.1	
tC, 2 stage (s)						
tF (s)	3.5	3.3			2.2	
p0 queue free %	94	95			98	
cM capacity (veh/h)	181	606			876	

Direction, Lane #	WB 1	NB 1	NB 2	SB 1	SB 2	SB 3
Volume Total	42	435	228	21	553	553
Volume Left	11	0	0	21	0	0
Volume Right	32	0	11	0	0	0
cSH	382	1700	1700	876	1700	1700
Volume to Capacity	0.11	0.26	0.13	0.02	0.33	0.33
Queue Length 95th (ft)	9	0	0	2	0	0
Control Delay (s)	15.6	0.0	0.0	9.2	0.0	0.0
Lane LOS	C			A		
Approach Delay (s)	15.6	0.0		0.2		
Approach LOS	C					

Intersection Summary			
Average Delay	0.5		
Intersection Capacity Utilization	46.2%	ICU Level of Service	A
Analysis Period (min)	15		

Movement	EBL	EBT	EBR	WBL	WBT	WBR	NBL	NBT	NBR	SBL	SBT	SBR
Lane Configurations												
Ideal Flow (vphpl)	1900	1900	1900	1900	1900	1900	1900	1900	1900	1900	1900	1900
Total Lost time (s)		4.0		4.0	4.0			4.0		4.0	4.0	
Lane Util. Factor		0.91		1.00	0.95			1.00		1.00	1.00	
Frpb, ped/bikes		1.00		1.00	1.00			0.99		1.00	0.99	
Flpb, ped/bikes		1.00		0.99	1.00			1.00		0.98	1.00	
Frt		0.99		1.00	0.98			0.98		1.00	0.98	
Flt Protected		1.00		0.95	1.00			0.99		0.95	1.00	
Satd. Flow (prot)		4993		1758	3468			1774		1729	1814	
Flt Permitted		0.83		0.42	1.00			0.55		0.41	1.00	
Satd. Flow (perm)		4178		777	3468			984		738	1814	
Volume (vph)	50	460	40	60	610	80	70	200	60	200	310	50
Peak-hour factor, PHF	0.95	0.95	0.95	0.95	0.95	0.95	0.95	0.95	0.95	0.95	0.95	0.95
Adj. Flow (vph)	53	484	42	63	642	84	74	211	63	211	326	53
RTOR Reduction (vph)	0	10	0	0	12	0	0	9	0	0	7	0
Lane Group Flow (vph)	0	569	0	63	714	0	0	339	0	211	372	0
Confl. Peds. (#/hr)	24		18	18		24	24		48	48		24
Turn Type	Perm			Perm			Perm			Perm		
Protected Phases		4			8			2			6	
Permitted Phases	4			8			2			6		
Actuated Green, G (s)		51.0		51.0	51.0			24.0		24.0	24.0	
Effective Green, g (s)		52.0		52.0	52.0			25.0		25.0	25.0	
Actuated g/C Ratio		0.61		0.61	0.61			0.29		0.29	0.29	
Clearance Time (s)		5.0		5.0	5.0			5.0		5.0	5.0	
Lane Grp Cap (vph)		2556		475	2122			289		217	534	
v/s Ratio Prot					c0.21						0.21	
v/s Ratio Perm		0.14		0.08				c0.34		0.29		
v/c Ratio		0.22		0.13	0.34			1.17		0.97	0.70	
Uniform Delay, d1		7.4		7.0	8.1			30.0		29.7	26.6	
Progression Factor		1.00		1.00	1.00			1.00		1.00	1.00	
Incremental Delay, d2		0.2		0.6	0.4			108.0		54.3	7.3	
Delay (s)		7.6		7.6	8.5			138.0		84.0	34.0	
Level of Service		A		A	A			F		F	C	
Approach Delay (s)		7.6			8.4			138.0			51.9	
Approach LOS		A			A			F			D	

Intersection Summary			
HCM Average Control Delay	38.9	HCM Level of Service	D
HCM Volume to Capacity ratio	0.61		
Actuated Cycle Length (s)	85.0	Sum of lost time (s)	8.0
Intersection Capacity Utilization	99.9%	ICU Level of Service	F
Analysis Period (min)	15		
c Critical Lane Group			

Movement	EBL	EBT	EBR	WBL	WBT	WBR	NBL	NBT	NBR	SBL	SBT	SBR
Lane Configurations												
Ideal Flow (vphpl)	1900	1900	1900	1900	1900	1900	1900	1900	1900	1900	1900	1900
Total Lost time (s)		4.0			4.0		4.0	4.0		4.0	4.0	
Lane Util. Factor		0.91			0.91		1.00	1.00		1.00	1.00	
Frpb, ped/bikes		1.00			1.00		1.00	1.00		1.00	1.00	
Flpb, ped/bikes		1.00			1.00		0.99	1.00		1.00	1.00	
Frt		1.00			0.98		1.00	0.96		1.00	0.98	
Flt Protected		1.00			1.00		0.95	1.00		0.95	1.00	
Satd. Flow (prot)		5046			4978		1757	1787		1770	1827	
Flt Permitted		0.88			0.85		0.34	1.00		0.40	1.00	
Satd. Flow (perm)		4467			4231		637	1787		742	1827	
Volume (vph)	30	690	20	50	650	90	50	190	70	90	260	30
Peak-hour factor, PHF	0.95	0.95	0.95	0.95	0.95	0.95	0.95	0.95	0.95	0.95	0.95	0.95
Adj. Flow (vph)	32	726	21	53	684	95	53	200	74	95	274	32
RTOR Reduction (vph)	0	4	0	0	20	0	0	16	0	0	5	0
Lane Group Flow (vph)	0	775	0	0	812	0	53	258	0	95	301	0
Confl. Peds. (#/hr)			18	18			12					18
Turn Type	Perm			Perm			Perm			Perm		
Protected Phases		4			8			2			6	
Permitted Phases	4			8			2			6		
Actuated Green, G (s)		50.0			50.0		19.0	19.0		19.0	19.0	
Effective Green, g (s)		51.5			51.5		20.5	20.5		20.5	20.5	
Actuated g/C Ratio		0.64			0.64		0.26	0.26		0.26	0.26	
Clearance Time (s)		5.5			5.5		5.5	5.5		5.5	5.5	
Lane Grp Cap (vph)		2876			2724		163	458		190	468	
v/s Ratio Prot								0.14			c0.16	
v/s Ratio Perm		0.17			c0.19		0.08			0.13		
v/c Ratio		0.27			0.30		0.33	0.56		0.50	0.64	
Uniform Delay, d1		6.1			6.3		24.1	25.9		25.4	26.5	
Progression Factor		1.00			0.67		1.00	1.00		1.22	1.24	
Incremental Delay, d2		0.2			0.3		5.2	4.9		8.9	6.5	
Delay (s)		6.4			4.5		29.4	30.8		39.9	39.3	
Level of Service		A			A		C	C		D	D	
Approach Delay (s)		6.4			4.5			30.6			39.4	
Approach LOS		A			A			C			D	

Intersection Summary			
HCM Average Control Delay	14.7	HCM Level of Service	B
HCM Volume to Capacity ratio	0.40		
Actuated Cycle Length (s)	80.0	Sum of lost time (s)	8.0
Intersection Capacity Utilization	62.6%	ICU Level of Service	B
Analysis Period (min)	15		
c Critical Lane Group			

Movement	EBL	EBT	EBR	WBL	WBT	WBR	NBL	NBT	NBR	SBL	SBT	SBR
Lane Configurations												
Ideal Flow (vphpl)	1900	1900	1900	1900	1900	1900	1900	1900	1900	1900	1900	1900
Total Lost time (s)		4.0			4.0			4.0			4.0	
Lane Util. Factor		0.91			0.91			0.95			0.95	
Frpb, ped/bikes		1.00			1.00			0.99			1.00	
Flpb, ped/bikes		1.00			1.00			1.00			1.00	
Frt		0.99			0.97			0.97			0.99	
Flt Protected		1.00			1.00			0.99			0.99	
Satd. Flow (prot)		5027			4919			3403			3458	
Flt Permitted		0.83			0.83			0.86			0.79	
Satd. Flow (perm)		4168			4082			2939			2774	
Volume (vph)	50	770	40	60	750	170	30	160	40	100	300	20
Peak-hour factor, PHF	0.95	0.95	0.95	0.95	0.95	0.95	0.95	0.95	0.95	0.95	0.95	0.95
Adj. Flow (vph)	53	811	42	63	789	179	32	168	42	105	316	21
RTOR Reduction (vph)	0	6	0	0	41	0	0	22	0	0	4	0
Lane Group Flow (vph)	0	900	0	0	990	0	0	220	0	0	438	0
Confl. Peds. (#/hr)	17		19	19		17	12		16	16		12
Turn Type	Perm			Perm			Perm			Perm		
Protected Phases		4			8			2			6	
Permitted Phases	4			8			2			6		
Actuated Green, G (s)		50.0			50.0			19.0			19.0	
Effective Green, g (s)		51.5			51.5			20.5			20.5	
Actuated g/C Ratio		0.64			0.64			0.26			0.26	
Clearance Time (s)		5.5			5.5			5.5			5.5	
Lane Grp Cap (vph)		2683			2628			753			711	
v/s Ratio Prot												
v/s Ratio Perm		0.22			c0.24			0.07			c0.16	
v/c Ratio		0.34			0.38			0.29			0.62	
Uniform Delay, d1		6.5			6.7			23.9			26.3	
Progression Factor		0.75			1.00			1.00			0.34	
Incremental Delay, d2		0.3			0.4			1.0			3.8	
Delay (s)		5.2			7.1			24.9			12.8	
Level of Service		A			A			C			B	
Approach Delay (s)		5.2			7.1			24.9			12.8	
Approach LOS		A			A			C			B	

Intersection Summary			
HCM Average Control Delay	9.1	HCM Level of Service	A
HCM Volume to Capacity ratio	0.44		
Actuated Cycle Length (s)	80.0	Sum of lost time (s)	8.0
Intersection Capacity Utilization	102.5%	ICU Level of Service	G
Analysis Period (min)	15		
c Critical Lane Group			

Movement	EBL	EBT	WBT	WBR	SBL	SBR
Lane Configurations						
Sign Control		Free	Free		Stop	
Grade		0%	0%		0%	
Volume (veh/h)	0	920	830	30	0	150
Peak Hour Factor	0.95	0.95	0.95	0.95	0.95	0.95
Hourly flow rate (vph)	0	968	874	32	0	158
Pedestrians		98			98	
Lane Width (ft)		12.0			12.0	
Walking Speed (ft/s)		4.0			4.0	
Percent Blockage		8			8	
Right turn flare (veh)						
Median type					None	
Median storage veh)						
Upstream signal (ft)		698	473			
pX, platoon unblocked	0.94				0.94	0.94
vC, conflicting volume	1003				1294	487
vC1, stage 1 conf vol						
vC2, stage 2 conf vol						
vCu, unblocked vol	885				1193	338
tC, single (s)	4.1				6.8	6.9
tC, 2 stage (s)						
tF (s)	2.2				3.5	3.3
p0 queue free %	100				100	70
cM capacity (veh/h)	659				156	524

Direction, Lane #	EB 1	EB 2	EB 3	WB 1	WB 2	WB 3	WB 4	SB 1
Volume Total	323	323	323	291	291	291	32	158
Volume Left	0	0	0	0	0	0	0	0
Volume Right	0	0	0	0	0	0	32	158
cSH	1700	1700	1700	1700	1700	1700	1700	524
Volume to Capacity	0.19	0.19	0.19	0.17	0.17	0.17	0.02	0.30
Queue Length 95th (ft)	0	0	0	0	0	0	0	32
Control Delay (s)	0.0	0.0	0.0	0.0	0.0	0.0	0.0	14.8
Lane LOS								B
Approach Delay (s)	0.0			0.0				14.8
Approach LOS								B

Intersection Summary			
Average Delay	1.2		
Intersection Capacity Utilization	37.9%	ICU Level of Service	A
Analysis Period (min)	15		

Movement	EBL	EBT	EBR	WBL	WBT	WBR	NBL	NBT	NBR	SBL	SBT	SBR
Lane Configurations												
Ideal Flow (vphpl)	1900	1900	1900	1900	1900	1900	1900	1900	1900	1900	1900	1900
Total Lost time (s)		4.0			4.0		4.0	4.0		4.0	4.0	
Lane Util. Factor		0.91			0.91		1.00	0.95		1.00	0.95	
Frpb, ped/bikes		1.00			0.99		1.00	0.99		1.00	0.99	
Flpb, ped/bikes		1.00			1.00		0.99	1.00		0.98	1.00	
Frt		0.98			0.97		1.00	0.97		1.00	0.98	
Flt Protected		1.00			0.99		0.95	1.00		0.95	1.00	
Satd. Flow (prot)		4967			4853		1758	3413		1741	3447	
Flt Permitted		0.72			0.69		0.27	1.00		0.47	1.00	
Satd. Flow (perm)		3577			3355		507	3413		860	3447	
Volume (vph)	80	750	100	110	700	200	50	350	80	280	680	110
Peak-hour factor, PHF	0.95	0.95	0.95	0.95	0.95	0.95	0.95	0.95	0.95	0.95	0.95	0.95
Adj. Flow (vph)	84	789	105	116	737	211	53	368	84	295	716	116
RTOR Reduction (vph)	0	21	0	0	78	0	0	16	0	0	10	0
Lane Group Flow (vph)	0	957	0	0	986	0	53	436	0	295	822	0
Confl. Peds. (#/hr)	40		9			40	25		31	31		25
Turn Type	Perm			Prot			Perm			Perm		
Protected Phases		4		3	8			2			6	
Permitted Phases	4						2			6		
Actuated Green, G (s)		29.9			29.9		44.6	44.6		44.6	44.6	
Effective Green, g (s)		31.4			31.4		45.6	45.6		45.6	45.6	
Actuated g/C Ratio		0.37			0.37		0.54	0.54		0.54	0.54	
Clearance Time (s)		5.5			5.5		5.0	5.0		5.0	5.0	
Vehicle Extension (s)		2.0			2.0		2.0	2.0		2.0	2.0	
Lane Grp Cap (vph)		1321			1239		272	1831		461	1849	
v/s Ratio Prot								0.13			0.24	
v/s Ratio Perm		0.27			c0.29		0.10			c0.34		
v/c Ratio		0.72			1.72dl		0.19	0.24		0.64	0.44	
Uniform Delay, d1		23.1			23.9		10.2	10.5		13.9	12.0	
Progression Factor		1.00			1.00		1.40	1.39		1.24	1.20	
Incremental Delay, d2		1.7			3.4		1.5	0.3		4.7	0.5	
Delay (s)		24.8			27.3		15.8	14.8		21.9	14.9	
Level of Service		C			C		B	B		C	B	
Approach Delay (s)		24.8			27.3			14.9			16.7	
Approach LOS		C			C			B			B	

Intersection Summary			
HCM Average Control Delay	21.7	HCM Level of Service	C
HCM Volume to Capacity ratio	0.70		
Actuated Cycle Length (s)	85.0	Sum of lost time (s)	8.0
Intersection Capacity Utilization	89.2%	ICU Level of Service	E
Analysis Period (min)	15		

dl Defacto Left Lane. Recode with 1 though lane as a left lane.
dr Defacto Right Lane. Recode with 1 though lane as a right lane.
c Critical Lane Group

Movement	EBL	EBT	EBR	WBL	WBT	WBR	NBL	NBT	NBR	SBL	SBT	SBR
Lane Configurations												
Ideal Flow (vphpl)	1900	1900	1900	1900	1900	1900	1900	1900	1900	1900	1900	1900
Total Lost time (s)		4.0			4.0			4.0	4.0		4.0	
Lane Util. Factor		0.91			0.91			1.00	1.00		1.00	
Frpb, ped/bikes		1.00			0.99			1.00	0.88		0.97	
Flpb, ped/bikes		1.00			1.00			0.97	1.00		0.95	
Frt		1.00			0.99			1.00	0.85		0.96	
Flt Protected		1.00			1.00			0.98	1.00		0.97	
Satd. Flow (prot)		5042			4983			1770	1395		1606	
Flt Permitted		0.88			0.88			0.88	1.00		0.83	
Satd. Flow (perm)		4452			4375			1592	1395		1360	
Volume (vph)	30	1080	30	30	980	80	20	30	20	80	30	40
Peak-hour factor, PHF	0.95	0.95	0.95	0.95	0.95	0.95	0.95	0.95	0.95	0.95	0.95	0.95
Adj. Flow (vph)	32	1137	32	32	1032	84	21	32	21	84	32	42
RTOR Reduction (vph)	0	4	0	0	11	0	0	0	15	0	16	0
Lane Group Flow (vph)	0	1197	0	0	1137	0	0	53	6	0	142	0
Confl. Peds. (#/hr)	100		100	100		100	100		100	100		100
Turn Type	Perm			Perm			Perm		Perm	Perm		
Protected Phases		4			8			2			6	
Permitted Phases	4			8			2		2	6		
Actuated Green, G (s)		48.0			48.0			23.0	23.0		23.0	
Effective Green, g (s)		48.5			48.5			23.5	23.5		23.5	
Actuated g/C Ratio		0.61			0.61			0.29	0.29		0.29	
Clearance Time (s)		4.5			4.5			4.5	4.5		4.5	
Lane Grp Cap (vph)		2699			2652			468	410		400	
v/s Ratio Prot												
v/s Ratio Perm		c0.27			0.26			0.03	0.00		c0.10	
v/c Ratio		0.44			0.43			0.11	0.02		0.35	
Uniform Delay, d1		8.5			8.4			20.6	20.0		22.3	
Progression Factor		1.00			1.00			1.00	1.00		1.00	
Incremental Delay, d2		0.5			0.5			0.5	0.1		2.4	
Delay (s)		9.0			8.9			21.1	20.1		24.7	
Level of Service		A			A			C	C		C	
Approach Delay (s)		9.0			8.9			20.8			24.7	
Approach LOS		A			A			C			C	

Intersection Summary			
HCM Average Control Delay	10.3	HCM Level of Service	B
HCM Volume to Capacity ratio	0.41		
Actuated Cycle Length (s)	80.0	Sum of lost time (s)	8.0
Intersection Capacity Utilization	81.7%	ICU Level of Service	D
Analysis Period (min)	15		
c Critical Lane Group			

Movement	EBL	EBT	EBR	WBL	WBT	WBR	NBL	NBT	NBR	SBL	SBT	SBR
Lane Configurations												
Ideal Flow (vphpl)	1900	1900	1900	1900	1900	1900	1900	1900	1900	1900	1900	1900
Total Lost time (s)	4.0	4.0		4.0	4.0		4.0	4.0	4.0	4.0	4.0	4.0
Lane Util. Factor	1.00	0.91		1.00	0.91		1.00	0.95	1.00	1.00	0.95	1.00
Frpb, ped/bikes	1.00	0.99		1.00	0.99		1.00	1.00	0.95	1.00	1.00	0.96
Flpb, ped/bikes	1.00	1.00		1.00	1.00		1.00	1.00	1.00	1.00	1.00	1.00
Frt	1.00	0.98		1.00	0.96		1.00	1.00	0.85	1.00	1.00	0.85
Flt Protected	0.95	1.00		0.95	1.00		0.95	1.00	1.00	0.95	1.00	1.00
Satd. Flow (prot)	1770	4908		1770	4817		1770	3539	1511	1770	3539	1523
Flt Permitted	0.95	1.00		0.95	1.00		0.95	1.00	1.00	0.95	1.00	1.00
Satd. Flow (perm)	1770	4908		1770	4817		1770	3539	1511	1770	3539	1523
Volume (vph)	160	890	140	150	750	280	110	300	110	310	1150	150
Peak-hour factor, PHF	0.95	0.95	0.95	0.95	0.95	0.95	0.95	0.95	0.95	0.95	0.95	0.95
Adj. Flow (vph)	168	937	147	158	789	295	116	316	116	326	1211	158
RTOR Reduction (vph)	0	17	0	0	56	0	0	0	51	0	0	33
Lane Group Flow (vph)	168	1067	0	158	1028	0	116	316	65	326	1211	125
Confl. Peds. (#/hr)			66			23			38			26
Turn Type	Prot			Prot			Prot		pm ov	Prot		pm ov
Protected Phases	7	4		3	8		5	2	3	1	6	7
Permitted Phases									2			6
Actuated Green, G (s)	12.0	34.0		13.6	35.6		10.4	31.4	45.0	25.0	46.0	58.0
Effective Green, g (s)	11.0	35.0		12.6	36.6		9.4	32.4	45.0	24.0	47.0	58.0
Actuated g/C Ratio	0.09	0.29		0.10	0.31		0.08	0.27	0.38	0.20	0.39	0.48
Clearance Time (s)	3.0	5.0		3.0	5.0		3.0	5.0	3.0	3.0	5.0	3.0
Vehicle Extension (s)	2.0	2.0		2.0	2.0		2.0	2.0	2.0	2.0	2.0	2.0
Lane Grp Cap (vph)	162	1432		186	1469		139	956	617	354	1386	787
v/s Ratio Prot	c0.09	c0.22		0.09	0.21		0.07	0.09	0.01	c0.18	c0.34	0.01
v/s Ratio Perm									0.03			0.07
v/c Ratio	1.04	0.75		0.85	0.70		0.83	0.33	0.11	0.92	0.87	0.16
Uniform Delay, d1	54.5	38.5		52.8	36.8		54.5	35.1	24.4	47.1	33.8	17.3
Progression Factor	1.00	1.00		1.00	1.00		1.00	1.00	1.00	1.00	1.00	1.00
Incremental Delay, d2	80.8	3.6		27.6	2.8		31.8	0.9	0.0	28.3	7.9	0.0
Delay (s)	135.3	42.0		80.4	39.6		86.3	36.0	24.4	75.3	41.6	17.4
Level of Service	F	D		F	D		F	D	C	E	D	B
Approach Delay (s)		54.5			44.8			44.2			45.9	
Approach LOS		D			D			D			D	

Intersection Summary			
HCM Average Control Delay	47.7	HCM Level of Service	D
HCM Volume to Capacity ratio	0.83		
Actuated Cycle Length (s)	120.0	Sum of lost time (s)	12.0
Intersection Capacity Utilization	82.4%	ICU Level of Service	E
Analysis Period (min)	15		
c Critical Lane Group			

Movement	EBL	EBT	EBR	WBL	WBT	WBR	NBL	NBT	NBR	SBL	SBT	SBR
Lane Configurations												
Ideal Flow (vphpl)	1900	1900	1900	1900	1900	1900	1900	1900	1900	1900	1900	1900
Total Lost time (s)		4.0			4.0		4.0	4.0		4.0	4.0	
Lane Util. Factor		1.00			1.00		1.00	0.95		1.00	0.95	
Frpb, ped/bikes		0.93			0.96		1.00	0.99		1.00	0.99	
Flpb, ped/bikes		0.98			0.96		0.94	1.00		0.92	1.00	
Frt		0.95			0.95		1.00	0.99		1.00	0.99	
Flt Protected		0.98			0.99		0.95	1.00		0.95	1.00	
Satd. Flow (prot)		1578			1610		1658	3453		1635	3468	
Flt Permitted		0.74			0.85		0.38	1.00		0.43	1.00	
Satd. Flow (perm)		1189			1395		664	3453		746	3468	
Volume (vph)	40	30	40	50	60	60	60	510	40	30	620	40
Peak-hour factor, PHF	0.95	0.95	0.95	0.95	0.95	0.95	0.95	0.95	0.95	0.95	0.95	0.95
Adj. Flow (vph)	42	32	42	53	63	63	63	537	42	32	653	42
RTOR Reduction (vph)	0	28	0	0	27	0	0	4	0	0	4	0
Lane Group Flow (vph)	0	88	0	0	152	0	63	575	0	32	691	0
Confl. Peds. (#/hr)	100		100	100		100	100		100	100		100
Turn Type	Perm			Perm			Perm			Perm		
Protected Phases		4			4			2			6	
Permitted Phases	4			4			2			6		
Actuated Green, G (s)		12.6			12.6		65.4	65.4		65.4	65.4	
Effective Green, g (s)		12.1			12.1		64.9	64.9		64.9	64.9	
Actuated g/C Ratio		0.14			0.14		0.76	0.76		0.76	0.76	
Clearance Time (s)		3.5			3.5		3.5	3.5		3.5	3.5	
Vehicle Extension (s)		2.0			2.0		2.0	2.0		2.0	2.0	
Lane Grp Cap (vph)		169			199		507	2636		570	2648	
v/s Ratio Prot								0.17			c0.20	
v/s Ratio Perm		0.07			c0.11		0.09			0.04		
v/c Ratio		0.52			0.76		0.12	0.22		0.06	0.26	
Uniform Delay, d1		33.8			35.1		2.6	2.9		2.5	3.0	
Progression Factor		1.00			1.00		1.00	1.00		0.30	0.27	
Incremental Delay, d2		1.1			14.3		0.5	0.2		0.2	0.2	
Delay (s)		34.9			49.3		3.1	3.0		0.9	1.0	
Level of Service		C			D		A	A		A	A	
Approach Delay (s)		34.9			49.3			3.1			1.0	
Approach LOS		C			D			A			A	

Intersection Summary			
HCM Average Control Delay	9.4	HCM Level of Service	A
HCM Volume to Capacity ratio	0.34		
Actuated Cycle Length (s)	85.0	Sum of lost time (s)	8.0
Intersection Capacity Utilization	54.8%	ICU Level of Service	A
Analysis Period (min)	15		

c Critical Lane Group

Movement	EBL	EBT	EBR	WBL	WBT	WBR	NBL	NBT	NBR	SBL	SBT	SBR
Lane Configurations												
Ideal Flow (vphpl)	1900	1900	1900	1900	1900	1900	1900	1900	1900	1900	1900	1900
Total Lost time (s)	4.0	4.0		4.0	4.0		4.0	4.0		4.0	4.0	
Lane Util. Factor	1.00	0.95		1.00	0.95		1.00	0.95		1.00	0.95	
Frpb, ped/bikes	1.00	0.97		1.00	0.95		1.00	0.99		1.00	0.95	
Flpb, ped/bikes	1.00	1.00		1.00	1.00		0.95	1.00		0.95	1.00	
Frt	1.00	0.97		1.00	0.96		1.00	0.98		1.00	0.96	
Flt Protected	0.95	1.00		0.95	1.00		0.95	1.00		0.95	1.00	
Satd. Flow (prot)	1770	3347		1770	3235		1688	3443		1675	3212	
Flt Permitted	0.95	1.00		0.95	1.00		0.28	1.00		0.50	1.00	
Satd. Flow (perm)	1770	3347		1770	3235		503	3443		879	3212	
Volume (vph)	260	400	100	70	370	120	70	330	40	80	510	210
Peak-hour factor, PHF	0.95	0.95	0.95	0.95	0.95	0.95	0.95	0.95	0.95	0.95	0.95	0.95
Adj. Flow (vph)	274	421	105	74	389	126	74	347	42	84	537	221
RTOR Reduction (vph)	0	24	0	0	40	0	0	9	0	0	44	0
Lane Group Flow (vph)	274	502	0	74	475	0	74	380	0	84	714	0
Confl. Peds. (#/hr)			100			100	100		100	100		100
Turn Type	Prot			Prot			Perm			Perm		
Protected Phases	7	4		3	8			2			6	
Permitted Phases							2			6		
Actuated Green, G (s)	16.1	26.4		6.8	17.1		38.3	38.3		38.3	38.3	
Effective Green, g (s)	16.6	25.9		7.3	16.6		39.8	39.8		39.8	39.8	
Actuated g/C Ratio	0.20	0.30		0.09	0.20		0.47	0.47		0.47	0.47	
Clearance Time (s)	4.5	3.5		4.5	3.5		5.5	5.5		5.5	5.5	
Vehicle Extension (s)	2.0	2.0		2.0	2.0		2.0	2.0		2.0	2.0	
Lane Grp Cap (vph)	346	1020		152	632		236	1612		412	1504	
v/s Ratio Prot	c0.15	0.15		0.04	c0.15			0.11			c0.22	
v/s Ratio Perm							0.15			0.10		
v/c Ratio	0.79	0.49		0.49	0.75		0.31	0.24		0.20	0.47	
Uniform Delay, d1	32.6	24.2		37.1	32.3		14.1	13.5		13.3	15.5	
Progression Factor	1.00	1.00		1.00	1.00		1.00	1.00		1.00	1.00	
Incremental Delay, d2	11.0	0.1		0.9	4.5		3.4	0.3		1.1	1.1	
Delay (s)	43.5	24.3		38.0	36.7		17.5	13.9		14.4	16.5	
Level of Service	D	C		D	D		B	B		B	B	
Approach Delay (s)		30.9			36.9			14.4			16.3	
Approach LOS		C			D			B			B	

Intersection Summary			
HCM Average Control Delay	24.8	HCM Level of Service	C
HCM Volume to Capacity ratio	0.61		
Actuated Cycle Length (s)	85.0	Sum of lost time (s)	12.0
Intersection Capacity Utilization	72.9%	ICU Level of Service	C
Analysis Period (min)	15		

c Critical Lane Group

HCM Signalized Intersection Capacity Analysis
1: 52nd St. & Shattuck Ave.

2015 PM
1/11/2008

Movement	EBL	EBT	EBR	WBL	WBT	WBR	NBL	NBT	NBR	SBL	SBT	SBR
Lane Configurations												
Ideal Flow (vphpl)	1900	1900	1900	1900	1900	1900	1900	1900	1900	1900	1900	1900
Lane Width	12	12	12	12	12	12	16	16	16	16	16	16
Total Lost time (s)	4.0	4.0		4.0	4.0		2.0	2.0		2.0	2.0	
Lane Util. Factor	1.00	0.91		1.00	0.91		1.00	1.00		1.00	1.00	
Frpb, ped/bikes	1.00	0.99		1.00	1.00		1.00	0.98		1.00	0.98	
Flpb, ped/bikes	1.00	1.00		1.00	1.00		1.00	1.00		0.98	1.00	
Frt	1.00	0.98		1.00	0.98		1.00	0.96		1.00	0.93	
Flt Protected	0.95	1.00		0.95	1.00		0.95	1.00		0.95	1.00	
Satd. Flow (prot)	1770	4933		1770	4968		2006	1993		1958	1915	
Flt Permitted	0.95	1.00		0.95	1.00		0.12	1.00		0.55	1.00	
Satd. Flow (perm)	1770	4933		1770	4968		264	1993		1138	1915	
Volume (vph)	340	1230	170	90	1020	150	170	240	90	140	270	270
Peak-hour factor, PHF	0.95	0.95	0.95	0.95	0.95	0.95	0.95	0.95	0.95	0.95	0.95	0.95
Adj. Flow (vph)	358	1295	179	95	1074	158	179	253	95	147	284	284
RTOR Reduction (vph)	0	17	0	0	19	0	0	14	0	0	37	0
Lane Group Flow (vph)	358	1457	0	95	1213	0	179	334	0	147	531	0
Confl. Peds. (#/hr)			32	32		4	12		24	24		12
Parking (#/hr)												0
Turn Type	Prot			Prot			pm pt			Perm		
Protected Phases	7	4		3	8		5	2			6	
Permitted Phases							2			6		
Actuated Green, G (s)	20.0	39.2		7.8	27.0		42.5	42.5		29.5	29.5	
Effective Green, g (s)	20.0	39.2		7.8	27.0		43.0	43.0		30.0	30.0	
Actuated g/C Ratio	0.20	0.39		0.08	0.27		0.43	0.43		0.30	0.30	
Clearance Time (s)	4.0	4.0		4.0	4.0		4.0	2.5		2.5	2.5	
Vehicle Extension (s)	3.0	3.0		3.0	3.0		3.0	3.0		3.0	3.0	
Lane Grp Cap (vph)	354	1934		138	1341		305	857		341	575	
v/s Ratio Prot	c0.20	0.30		0.05	c0.24		c0.06	0.17			c0.28	
v/s Ratio Perm							0.19			0.13		
v/c Ratio	1.01	0.75		0.69	0.90		0.59	0.39		0.43	0.92	
Uniform Delay, d1	40.0	26.2		44.9	35.3		43.5	19.5		28.1	33.9	
Progression Factor	1.00	1.00		1.00	1.00		1.00	1.00		1.00	1.00	
Incremental Delay, d2	50.7	2.8		13.4	10.3		2.9	0.3		0.9	20.6	
Delay (s)	90.7	29.0		58.3	45.5		46.4	19.8		29.0	54.5	
Level of Service	F	C		E	D		D	B		C	D	
Approach Delay (s)		41.1			46.4			28.8			49.2	
Approach LOS		D			D			C			D	

Intersection Summary			
HCM Average Control Delay	42.5	HCM Level of Service	D
HCM Volume to Capacity ratio	0.89		
Actuated Cycle Length (s)	100.0	Sum of lost time (s)	12.0
Intersection Capacity Utilization	96.0%	ICU Level of Service	F
Analysis Period (min)	15		

c Critical Lane Group

HCM Signalized Intersection Capacity Analysis
2: 52nd St. & Telegraph Ave.

2015 PM
1/11/2008

Movement	EBL	EBT	EBR	WBL	WBT	WBR	NBL	NBT	NBR	SBL	SBT	SBR
Lane Configurations												
Ideal Flow (vphpl)	1900	1900	1900	1900	1900	1900	1900	1900	1900	1900	1900	1900
Total Lost time (s)		4.0		4.0	4.0			4.0		4.0	4.0	
Lane Util. Factor		1.00		0.95	0.95			0.95		1.00	0.95	
Frpb, ped/bikes		1.00		1.00	0.97			0.98		1.00	0.95	
Flpb, ped/bikes		0.99		1.00	1.00			1.00		1.00	1.00	
Frt		0.93		1.00	0.92			0.96		1.00	0.95	
Flt Protected		0.99		0.95	1.00			1.00		0.95	1.00	
Satd. Flow (prot)		1705		1681	1578			3315		1770	3188	
Flt Permitted		0.36		0.73	1.00			0.94		0.95	1.00	
Satd. Flow (perm)		619		1290	1578			3128		1770	3188	
Volume (vph)	10	10	20	110	110	120	10	1120	480	120	800	410
Peak-hour factor, PHF	0.95	0.95	0.95	0.95	0.95	0.95	0.95	0.95	0.95	0.95	0.95	0.95
Adj. Flow (vph)	11	11	21	116	116	126	11	1179	505	126	842	432
RTOR Reduction (vph)	0	20	0	0	43	0	0	39	0	0	53	0
Lane Group Flow (vph)	0	23	0	116	199	0	0	1656	0	126	1221	0
Confl. Peds. (#/hr)	36					36	48		16	16		48
Turn Type	Perm			Perm			Perm			Prot		
Protected Phases		7			8			2		1	6	
Permitted Phases	7			8			2					
Actuated Green, G (s)		6.5		16.0	16.0			48.7		10.8	64.0	
Effective Green, g (s)		7.0		16.5	16.5			49.2		11.3	64.5	
Actuated g/C Ratio		0.07		0.16	0.16			0.49		0.11	0.64	
Clearance Time (s)		4.5		4.5	4.5			4.5		4.5	4.5	
Vehicle Extension (s)		2.0		2.0	2.0			2.0		2.0	2.0	
Lane Grp Cap (vph)		43		213	260			1539		200	2056	
v/s Ratio Prot										0.07	c0.38	
v/s Ratio Perm		c0.04		0.09	0.13			c0.53				
v/c Ratio		0.55		0.54	0.77			1.08		0.63	0.59	
Uniform Delay, d1		45.0		38.3	39.9			25.4		42.4	10.2	
Progression Factor		1.00		1.00	1.00			0.60		1.00	1.00	
Incremental Delay, d2		7.4		1.5	11.5			37.9		4.7	1.3	
Delay (s)		52.3		39.8	51.4			53.2		47.0	11.5	
Level of Service		D		D	D			D		D	B	
Approach Delay (s)		52.3			47.7			53.2			14.7	
Approach LOS		D			D			D			B	

Intersection Summary			
HCM Average Control Delay	37.2	HCM Level of Service	D
HCM Volume to Capacity ratio	0.92		
Actuated Cycle Length (s)	100.0	Sum of lost time (s)	16.0
Intersection Capacity Utilization	110.5%	ICU Level of Service	H
Analysis Period (min)	15		

c Critical Lane Group

Movement	EBL	EBT	EBR	WBL	WBT	WBR	NBL	NBT	NBR	SBL	SBT	SBR
Lane Configurations												
Ideal Flow (vphpl)	1900	1900	1900	1900	1900	1900	1900	1900	1900	1900	1900	1900
Total Lost time (s)	4.0	4.0		4.0	4.0		4.0	4.0		4.0	4.0	
Lane Util. Factor	0.97	0.95		1.00	0.95		1.00	0.95		1.00	0.95	
Frpb, ped/bikes	1.00	0.99		1.00	0.99		1.00	0.98		1.00	0.98	
Flpb, ped/bikes	1.00	1.00		1.00	1.00		1.00	1.00		1.00	1.00	
Frt	1.00	0.99		1.00	0.95		1.00	0.97		1.00	0.99	
Flt Protected	0.95	1.00		0.95	1.00		0.95	1.00		0.95	1.00	
Satd. Flow (prot)	3433	3458		1770	3308		1770	3359		1770	3410	
Flt Permitted	0.95	1.00		0.95	1.00		0.95	1.00		0.95	1.00	
Satd. Flow (perm)	3433	3458		1770	3308		1770	3359		1770	3410	
Volume (vph)	460	880	80	120	510	290	90	880	260	220	660	60
Peak-hour factor, PHF	0.95	0.95	0.95	0.95	0.95	0.95	0.95	0.95	0.95	0.95	0.95	0.95
Adj. Flow (vph)	484	926	84	126	537	305	95	926	274	232	695	63
RTOR Reduction (vph)	0	6	0	0	79	0	0	27	0	0	7	0
Lane Group Flow (vph)	484	1004	0	126	763	0	95	1173	0	232	751	0
Confl. Peds. (#/hr)	15		48	48		15	123		48	48		123
Turn Type	Prot			Prot			Prot			Prot		
Protected Phases	7	4		3	8		5	2		1	6	
Permitted Phases												
Actuated Green, G (s)	15.7	28.3		10.0	22.6		5.0	32.7		12.0	39.7	
Effective Green, g (s)	15.2	29.3		9.5	23.6		4.5	33.7		11.5	40.7	
Actuated g/C Ratio	0.15	0.29		0.10	0.24		0.04	0.34		0.12	0.41	
Clearance Time (s)	3.5	5.0		3.5	5.0		3.5	5.0		3.5	5.0	
Vehicle Extension (s)	2.0	2.0		2.0	2.0		2.0	2.0		2.0	2.0	
Lane Grp Cap (vph)	522	1013		168	781		80	1132		204	1388	
v/s Ratio Prot	c0.14	c0.29		0.07	0.23		0.05	c0.35		c0.13	0.22	
v/s Ratio Perm												
v/c Ratio	0.93	0.99		0.75	0.98		1.19	1.04		1.14	0.54	
Uniform Delay, d1	41.9	35.2		44.1	37.9		47.8	33.1		44.2	22.6	
Progression Factor	1.00	1.00		1.00	1.00		1.00	1.00		1.22	0.74	
Incremental Delay, d2	22.3	25.9		15.3	26.1		159.7	36.5		98.9	1.2	
Delay (s)	64.2	61.1		59.4	64.0		207.4	69.7		153.0	18.0	
Level of Service	E	E		E	E		F	E		F	B	
Approach Delay (s)		62.1			63.4			79.8			49.6	
Approach LOS		E			E			E			D	

Intersection Summary			
HCM Average Control Delay	64.6	HCM Level of Service	E
HCM Volume to Capacity ratio	1.00		
Actuated Cycle Length (s)	100.0	Sum of lost time (s)	12.0
Intersection Capacity Utilization	96.1%	ICU Level of Service	F
Analysis Period (min)	15		

c Critical Lane Group

Movement	EBL	EBT	EBR	WBL	WBT	WBR	NBL	NBT	NBR	SBL	SBT	SBR
Lane Configurations												
Ideal Flow (vphpl)	1900	1900	1900	1900	1900	1900	1900	1900	1900	1900	1900	1900
Total Lost time (s)		4.0						4.0		4.0	4.0	
Lane Util. Factor		1.00						0.95		0.97	0.95	
Frt		0.86						0.94		1.00	0.98	
Flt Protected		1.00						1.00		0.95	1.00	
Satd. Flow (prot)		1611						3325		3433	3451	
Flt Permitted		1.00						0.95		0.95	1.00	
Satd. Flow (perm)		1611						3151		3433	3451	
Volume (vph)	0	0	10	0	0	0	10	410	280	1500	300	60
Peak-hour factor, PHF	0.95	0.95	0.95	0.95	0.95	0.95	0.95	0.95	0.95	0.95	0.95	0.95
Adj. Flow (vph)	0	0	11	0	0	0	11	432	295	1579	316	63
RTOR Reduction (vph)	0	11	0	0	0	0	0	20	0	0	0	0
Lane Group Flow (vph)	0	0	0	0	0	0	0	718	0	1579	379	0
Turn Type							Perm			Prot		
Protected Phases								2		1	6	
Permitted Phases							2					
Actuated Green, G (s)		0.0						13.0		29.0	50.0	
Effective Green, g (s)		0.0						13.0		29.0	50.0	
Actuated g/C Ratio		0.00						0.26		0.58	1.00	
Clearance Time (s)								4.0		4.0	2.0	
Lane Grp Cap (vph)		0						819		1991	3451	
v/s Ratio Prot										c0.46	0.11	
v/s Ratio Perm								c0.23				
v/c Ratio		0.00						0.88		0.79	0.11	
Uniform Delay, d1		25.0						17.7		8.2	0.0	
Progression Factor		1.00						0.75		1.00	1.00	
Incremental Delay, d2		0.0						12.1		3.3	0.1	
Delay (s)		25.0						25.3		11.5	0.1	
Level of Service		C						C		B	A	
Approach Delay (s)		25.0			0.0			25.3			9.3	
Approach LOS		C			A			C			A	

Intersection Summary			
HCM Average Control Delay	13.7	HCM Level of Service	B
HCM Volume to Capacity ratio	0.82		
Actuated Cycle Length (s)	50.0	Sum of lost time (s)	8.0
Intersection Capacity Utilization	76.7%	ICU Level of Service	D
Analysis Period (min)	15		

c Critical Lane Group

Movement	EBL	EBT	EBR	WBL	WBT	WBR	NBL	NBT	NBR	SBL	SBT	SBR
Lane Configurations												
Ideal Flow (vphpl)	1900	1900	1900	1900	1900	1900	1900	1900	1900	1900	1900	1900
Total Lost time (s)		4.0			4.0			4.0			4.0	
Lane Util. Factor		1.00			1.00			0.95			0.95	
Frpb, ped/bikes		0.97			0.97			0.99			0.99	
Flpb, ped/bikes		0.98			0.97			1.00			0.99	
Frt		0.97			0.96			0.98			0.99	
Flt Protected		0.99			0.99			1.00			0.99	
Satd. Flow (prot)		1698			1658			3406			3439	
Flt Permitted		0.88			0.92			0.93			0.82	
Satd. Flow (perm)		1519			1540			3173			2855	
Volume (vph)	30	50	20	50	100	70	30	540	80	50	270	20
Peak-hour factor, PHF	0.95	0.95	0.95	0.95	0.95	0.95	0.95	0.95	0.95	0.95	0.95	0.95
Adj. Flow (vph)	32	53	21	53	105	74	32	568	84	53	284	21
RTOR Reduction (vph)	0	14	0	0	34	0	0	22	0	0	9	0
Lane Group Flow (vph)	0	92	0	0	198	0	0	662	0	0	349	0
Confl. Peds. (#/hr)	100		100	100		100	100		100	100		100
Turn Type	Perm			Perm			Perm			Perm		
Protected Phases		4			8			2			6	
Permitted Phases	4			8			2			6		
Actuated Green, G (s)		17.0			17.0			25.0			25.0	
Effective Green, g (s)		17.0			17.0			25.0			25.0	
Actuated g/C Ratio		0.34			0.34			0.50			0.50	
Clearance Time (s)		4.0			4.0			4.0			4.0	
Lane Grp Cap (vph)		516			524			1587			1428	
v/s Ratio Prot												
v/s Ratio Perm		0.06			c0.13			c0.21			0.12	
v/c Ratio		0.18			0.38			0.42			0.24	
Uniform Delay, d1		11.6			12.5			7.9			7.1	
Progression Factor		1.00			1.00			1.00			1.00	
Incremental Delay, d2		0.8			2.1			0.8			0.4	
Delay (s)		12.4			14.6			8.7			7.5	
Level of Service		B			B			A			A	
Approach Delay (s)		12.4			14.6			8.7			7.5	
Approach LOS		B			B			A			A	

Intersection Summary			
HCM Average Control Delay	9.7	HCM Level of Service	A
HCM Volume to Capacity ratio	0.40		
Actuated Cycle Length (s)	50.0	Sum of lost time (s)	8.0
Intersection Capacity Utilization	68.5%	ICU Level of Service	C
Analysis Period (min)	15		
c Critical Lane Group			

Movement	EBL	EBT	EBR	WBL	WBT	WBR	NBL	NBT	NBR	SBL	SBT	SBR
Lane Configurations												
Ideal Flow (vphpl)	1900	1900	1900	1900	1900	1900	1900	1900	1900	1900	1900	1900
Total Lost time (s)		4.0			4.0			4.0			4.0	
Lane Util. Factor		1.00			1.00			0.95			0.91	
Frpb, ped/bikes		0.95			0.97			0.99			0.98	
Flpb, ped/bikes		0.97			0.98			1.00			1.00	
Frt		0.95			0.97			0.99			0.99	
Flt Protected		0.98			0.99			1.00			1.00	
Satd. Flow (prot)		1618			1681			3467			4923	
Flt Permitted		0.80			0.83			0.87			0.85	
Satd. Flow (perm)		1318			1420			3023			4195	
Volume (vph)	60	60	60	30	60	30	50	1480	60	30	930	70
Peak-hour factor, PHF	0.95	0.95	0.95	0.95	0.95	0.95	0.95	0.95	0.95	0.95	0.95	0.95
Adj. Flow (vph)	63	63	63	32	63	32	53	1558	63	32	979	74
RTOR Reduction (vph)	0	32	0	0	5	0	0	2	0	0	5	0
Lane Group Flow (vph)	0	157	0	0	122	0	0	1672	0	0	1080	0
Confl. Peds. (#/hr)	100		100	100		100	100		100	100		100
Turn Type	Perm			Perm			Perm			Perm		
Protected Phases		4			4			2			6	
Permitted Phases	4			4			2			6		
Actuated Green, G (s)		11.9			11.9			59.1			59.1	
Effective Green, g (s)		12.4			12.4			59.6			59.6	
Actuated g/C Ratio		0.16			0.16			0.75			0.75	
Clearance Time (s)		4.5			4.5			4.5			4.5	
Vehicle Extension (s)		2.0			2.0			2.0			2.0	
Lane Grp Cap (vph)		204			220			2252			3125	
v/s Ratio Prot												
v/s Ratio Perm		c0.12			0.09			c0.55			0.26	
v/c Ratio		0.77			0.55			0.74			0.35	
Uniform Delay, d1		32.4			31.2			5.8			3.5	
Progression Factor		1.00			1.00			1.00			1.00	
Incremental Delay, d2		14.4			1.7			2.3			0.3	
Delay (s)		46.9			33.0			8.1			3.8	
Level of Service		D			C			A			A	
Approach Delay (s)		46.9			33.0			8.1			3.8	
Approach LOS		D			C			A			A	

Intersection Summary			
HCM Average Control Delay	10.0	HCM Level of Service	A
HCM Volume to Capacity ratio	0.75		
Actuated Cycle Length (s)	80.0	Sum of lost time (s)	8.0
Intersection Capacity Utilization	102.6%	ICU Level of Service	G
Analysis Period (min)	15		
c Critical Lane Group			

Movement	EBL	EBT	EBR	WBL	WBT	WBR	NBL	NBT	NBR	SBL	SBT	SBR
Lane Configurations												
Ideal Flow (vphpl)	1900	1900	1900	1900	1900	1900	1900	1900	1900	1900	1900	1900
Total Lost time (s)	4.0	4.0		4.0	4.0		4.0	4.0		4.0	4.0	
Lane Util. Factor	1.00	0.95		1.00	0.95		1.00	1.00		1.00	1.00	
Frpb, ped/bikes	1.00	1.00		1.00	0.99		1.00	1.00		1.00	1.00	
Flpb, ped/bikes	0.99	1.00		1.00	1.00		0.98	1.00		1.00	1.00	
Frt	1.00	0.99		1.00	0.98		1.00	0.98		1.00	0.98	
Flt Protected	0.95	1.00		0.95	1.00		0.95	1.00		0.95	1.00	
Satd. Flow (prot)	1761	3486		1766	3440		1738	1821		1764	1817	
Flt Permitted	0.29	1.00		0.17	1.00		0.57	1.00		0.37	1.00	
Satd. Flow (perm)	534	3486		309	3440		1050	1821		678	1817	
Volume (vph)	40	820	80	50	560	100	130	390	60	100	200	30
Peak-hour factor, PHF	0.95	0.95	0.95	0.95	0.95	0.95	0.95	0.95	0.95	0.95	0.95	0.95
Adj. Flow (vph)	42	863	84	53	589	105	137	411	63	105	211	32
RTOR Reduction (vph)	0	9	0	0	18	0	0	7	0	0	7	0
Lane Group Flow (vph)	42	938	0	53	676	0	137	467	0	105	236	0
Confl. Peds. (#/hr)	12		12	12		12	42		12	12		42
Turn Type	Perm			Perm			Perm			Perm		
Protected Phases		4			8			2			6	
Permitted Phases	4			8			2			6		
Actuated Green, G (s)	33.0	33.0		33.0	33.0		40.5	40.5		40.5	40.5	
Effective Green, g (s)	32.0	32.0		32.0	32.0		40.0	40.0		40.0	40.0	
Actuated g/C Ratio	0.40	0.40		0.40	0.40		0.50	0.50		0.50	0.50	
Clearance Time (s)	3.0	3.0		3.0	3.0		3.5	3.5		3.5	3.5	
Lane Grp Cap (vph)	214	1394		124	1376		525	911		339	909	
v/s Ratio Prot		c0.27			0.20			c0.26			0.13	
v/s Ratio Perm	0.08			0.17			0.13			0.15		
v/c Ratio	0.20	0.67		0.43	0.49		0.26	0.51		0.31	0.26	
Uniform Delay, d1	15.6	19.7		17.4	17.9		11.5	13.4		11.8	11.5	
Progression Factor	1.00	1.00		1.80	1.92		1.73	1.78		1.00	1.00	
Incremental Delay, d2	2.0	2.6		8.8	1.1		0.4	0.8		2.4	0.7	
Delay (s)	17.7	22.3		40.0	35.5		20.3	24.6		14.2	12.2	
Level of Service	B	C		D	D		C	C		B	B	
Approach Delay (s)		22.1			35.8			23.7			12.8	
Approach LOS		C			D			C			B	

Intersection Summary			
HCM Average Control Delay	25.1	HCM Level of Service	C
HCM Volume to Capacity ratio	0.58		
Actuated Cycle Length (s)	80.0	Sum of lost time (s)	8.0
Intersection Capacity Utilization	82.2%	ICU Level of Service	E
Analysis Period (min)	15		
c Critical Lane Group			

Movement	EBL	EBT	EBR	WBL	WBT	WBR	NBL	NBT	NBR	SBL	SBT	SBR
Lane Configurations												
Ideal Flow (vphpl)	1900	1900	1900	1900	1900	1900	1900	1900	1900	1900	1900	1900
Total Lost time (s)	4.0	4.0		4.0	4.0			4.0			4.0	
Lane Util. Factor	1.00	0.95		1.00	0.95			0.95			0.95	
Frpb, ped/bikes	1.00	0.99		1.00	1.00			1.00			1.00	
Flpb, ped/bikes	0.99	1.00		0.99	1.00			1.00			1.00	
Frt	1.00	0.99		1.00	0.99			0.98			0.98	
Flt Protected	0.95	1.00		0.95	1.00			0.99			0.99	
Satd. Flow (prot)	1756	3469		1749	3489			3429			3425	
Flt Permitted	0.23	1.00		0.16	1.00			0.81			0.88	
Satd. Flow (perm)	433	3469		295	3489			2820			3034	
Volume (vph)	50	900	80	50	620	50	100	280	50	30	180	40
Peak-hour factor, PHF	0.97	0.97	0.97	0.97	0.97	0.97	0.97	0.97	0.97	0.97	0.97	0.97
Adj. Flow (vph)	52	928	82	52	639	52	103	289	52	31	186	41
RTOR Reduction (vph)	0	8	0	0	8	0	0	4	0	0	17	0
Lane Group Flow (vph)	52	1002	0	52	683	0	0	440	0	0	241	0
Confl. Peds. (#/hr)	24		78	78		24	8		6	6		8
Turn Type	Perm			Perm			Perm			Perm		
Protected Phases		4			8			2			6	
Permitted Phases	4			8			2			6		
Actuated Green, G (s)	24.0	24.0		24.0	24.0			46.0			46.0	
Effective Green, g (s)	25.0	25.0		25.0	25.0			47.0			47.0	
Actuated g/C Ratio	0.31	0.31		0.31	0.31			0.59			0.59	
Clearance Time (s)	5.0	5.0		5.0	5.0			5.0			5.0	
Lane Grp Cap (vph)	135	1084		92	1090			1657			1782	
v/s Ratio Prot		c0.29			0.20							
v/s Ratio Perm	0.12			0.18				c0.16			0.08	
v/c Ratio	0.39	0.92		0.57	0.63			0.27			0.14	
Uniform Delay, d1	21.5	26.6		23.0	23.5			8.1			7.4	
Progression Factor	0.47	0.50		0.90	0.89			1.01			1.00	
Incremental Delay, d2	6.5	11.9		20.3	2.4			0.3			0.2	
Delay (s)	16.7	25.2		40.9	23.3			8.5			7.6	
Level of Service	B	C		D	C			A			A	
Approach Delay (s)		24.7			24.5			8.5			7.6	
Approach LOS		C			C			A			A	

Intersection Summary			
HCM Average Control Delay	20.0	HCM Level of Service	C
HCM Volume to Capacity ratio	0.49		
Actuated Cycle Length (s)	80.0	Sum of lost time (s)	8.0
Intersection Capacity Utilization	71.2%	ICU Level of Service	C
Analysis Period (min)	15		
c Critical Lane Group			

Movement	EBL	EBT	EBR	WBL	WBT	WBR	NBL	NBT	NBR	SBL	SBT	SBR
Lane Configurations												
Ideal Flow (vphpl)	1900	1900	1900	1900	1900	1900	1900	1900	1900	1900	1900	1900
Total Lost time (s)	4.0	4.0		4.0	4.0			4.0			4.0	
Lane Util. Factor	1.00	0.95		1.00	0.95			0.95			0.95	
Frpb, ped/bikes	1.00	1.00		1.00	1.00			0.99			1.00	
Flpb, ped/bikes	1.00	1.00		0.99	1.00			1.00			1.00	
Frt	1.00	0.99		1.00	0.98			0.96			0.98	
Flt Protected	0.95	1.00		0.95	1.00			0.99			0.99	
Satd. Flow (prot)	1765	3504		1759	3441			3371			3426	
Flt Permitted	0.26	1.00		0.18	1.00			0.87			0.70	
Satd. Flow (perm)	488	3504		338	3441			2948			2447	
Volume (vph)	70	900	50	60	650	120	70	410	150	90	210	40
Peak-hour factor, PHF	0.99	0.99	0.99	0.99	0.99	0.99	0.99	0.99	0.99	0.99	0.99	0.99
Adj. Flow (vph)	71	909	51	61	657	121	71	414	152	91	212	40
RTOR Reduction (vph)	0	5	0	0	19	0	0	28	0	0	13	0
Lane Group Flow (vph)	71	955	0	61	759	0	0	609	0	0	330	0
Confl. Peds. (#/hr)	8		39	39		8			25	25		
Turn Type	Perm			Perm			Perm			Perm		
Protected Phases		4			8			2			6	
Permitted Phases	4			8			2			6		
Actuated Green, G (s)	35.5	35.5		35.5	35.5			38.0			38.0	
Effective Green, g (s)	35.0	35.0		35.0	35.0			37.0			37.0	
Actuated g/C Ratio	0.44	0.44		0.44	0.44			0.46			0.46	
Clearance Time (s)	3.5	3.5		3.5	3.5			3.0			3.0	
Lane Grp Cap (vph)	214	1533		148	1505			1363			1132	
v/s Ratio Prot		c0.27			0.22							
v/s Ratio Perm	0.15			0.18				c0.21			0.13	
v/c Ratio	0.33	0.62		0.41	0.50			0.45			0.29	
Uniform Delay, d1	14.8	17.4		15.4	16.2			14.6			13.4	
Progression Factor	0.94	1.04		1.00	1.00			1.51			1.00	
Incremental Delay, d2	2.1	1.0		8.3	1.2			0.9			0.7	
Delay (s)	15.9	19.0		23.7	17.4			22.9			14.0	
Level of Service	B	B		C	B			C			B	
Approach Delay (s)		18.8			17.9			22.9			14.0	
Approach LOS		B			B			C			B	

Intersection Summary			
HCM Average Control Delay	18.9	HCM Level of Service	B
HCM Volume to Capacity ratio	0.53		
Actuated Cycle Length (s)	80.0	Sum of lost time (s)	8.0
Intersection Capacity Utilization	85.2%	ICU Level of Service	E
Analysis Period (min)	15		
c Critical Lane Group			

Movement	EBT	EBR	WBL	WBT	NBL	NBR
Lane Configurations						
Ideal Flow (vphpl)	1900	1900	1900	1900	1900	1900
Total Lost time (s)	4.0		4.0	4.0		
Lane Util. Factor	0.95		1.00	0.95		
Frpb, ped/bikes	0.97		1.00	1.00		
Flpb, ped/bikes	1.00		1.00	1.00		
Frt	0.99		1.00	1.00		
Flt Protected	1.00		0.95	1.00		
Satd. Flow (prot)	3400		1770	3539		
Flt Permitted	1.00		0.95	1.00		
Satd. Flow (perm)	3400		1770	3539		
Volume (vph)	1050	80	80	820	0	0
Peak-hour factor, PHF	0.97	0.97	0.97	0.97	0.97	0.97
Adj. Flow (vph)	1082	82	82	845	0	0
RTOR Reduction (vph)	9	0	0	0	0	0
Lane Group Flow (vph)	1155	0	82	845	0	0
Confl. Peds. (#/hr)		213	348			
Turn Type			Prot			
Protected Phases	4		3	8		
Permitted Phases						
Actuated Green, G (s)	27.0		25.0	60.0		
Effective Green, g (s)	27.0		25.0	60.0		
Actuated g/C Ratio	0.45		0.42	1.00		
Clearance Time (s)	4.0		4.0	4.0		
Lane Grp Cap (vph)	1530		738	3539		
v/s Ratio Prot	c0.34		0.05	c0.24		
v/s Ratio Perm						
v/c Ratio	0.75		0.11	0.24		
Uniform Delay, d1	13.7		10.7	0.0		
Progression Factor	1.00		1.00	1.00		
Incremental Delay, d2	3.5		0.3	0.2		
Delay (s)	17.2		11.0	0.2		
Level of Service	B		B	A		
Approach Delay (s)	17.2			1.1	0.0	
Approach LOS	B			A	A	

Intersection Summary			
HCM Average Control Delay	10.1	HCM Level of Service	B
HCM Volume to Capacity ratio	0.49		
Actuated Cycle Length (s)	60.0	Sum of lost time (s)	4.0
Intersection Capacity Utilization	43.2%	ICU Level of Service	A
Analysis Period (min)	15		
c Critical Lane Group			

Movement	EBT	EBR	WBL	WBT	NBL	NBR
Lane Configurations						
Sign Control	Free			Free	Stop	
Grade	0%			0%	0%	
Volume (veh/h)	970	80	0	900	0	70
Peak Hour Factor	0.95	0.95	0.95	0.95	0.95	0.95
Hourly flow rate (vph)	1021	84	0	947	0	74
Pedestrians				109	109	
Lane Width (ft)				12.0	12.0	
Walking Speed (ft/s)				4.0	4.0	
Percent Blockage				9	9	
Right turn flare (veh)						
Median type					None	
Median storage veh)						
Upstream signal (ft)	81			406		
pX, platoon unblocked			0.72		0.77	0.72
vC, conflicting volume			1214		1646	771
vC1, stage 1 conf vol						
vC2, stage 2 conf vol						
vCu, unblocked vol			904		1117	285
tC, single (s)			4.1		6.8	6.9
tC, 2 stage (s)						
tF (s)			2.2		3.5	3.3
p0 queue free %			100		100	83
cM capacity (veh/h)			488		141	422

Direction, Lane #	EB 1	EB 2	WB 1	WB 2	NB 1
Volume Total	681	425	474	474	74
Volume Left	0	0	0	0	0
Volume Right	0	84	0	0	74
cSH	1700	1700	1700	1700	422
Volume to Capacity	0.40	0.25	0.28	0.28	0.17
Queue Length 95th (ft)	0	0	0	0	16
Control Delay (s)	0.0	0.0	0.0	0.0	15.3
Lane LOS					C
Approach Delay (s)	0.0		0.0		15.3
Approach LOS					C

Intersection Summary			
Average Delay	0.5		
Intersection Capacity Utilization	49.8%	ICU Level of Service	A
Analysis Period (min)	15		

Movement	EBT	EBR	WBL	WBT	NBL	NBR
Lane Configurations						
Sign Control	Free			Free	Stop	
Grade	0%			0%	0%	
Volume (veh/h)	1030	10	0	900	0	60
Peak Hour Factor	0.95	0.95	0.95	0.95	0.95	0.95
Hourly flow rate (vph)	1084	11	0	947	0	63
Pedestrians				109	109	
Lane Width (ft)				12.0	12.0	
Walking Speed (ft/s)				4.0	4.0	
Percent Blockage				9	9	
Right turn flare (veh)						
Median type					None	
Median storage veh)						
Upstream signal (ft)	298			189		
pX, platoon unblocked			0.74		0.80	0.74
vC, conflicting volume			1204		1672	765
vC1, stage 1 conf vol						
vC2, stage 2 conf vol						
vCu, unblocked vol			919		1103	323
tC, single (s)			4.1		6.8	6.9
tC, 2 stage (s)						
tF (s)			2.2		3.5	3.3
p0 queue free %			100		100	85
cM capacity (veh/h)			494		150	409

Direction, Lane #	EB 1	EB 2	WB 1	WB 2	NB 1
Volume Total	723	372	474	474	63
Volume Left	0	0	0	0	0
Volume Right	0	11	0	0	63
cSH	1700	1700	1700	1700	409
Volume to Capacity	0.43	0.22	0.28	0.28	0.15
Queue Length 95th (ft)	0	0	0	0	14
Control Delay (s)	0.0	0.0	0.0	0.0	15.4
Lane LOS					C
Approach Delay (s)	0.0		0.0		15.4
Approach LOS					C

Intersection Summary			
Average Delay	0.5		
Intersection Capacity Utilization	48.8%	ICU Level of Service	A
Analysis Period (min)	15		

Movement	EBL	EBT	EBR	WBL	WBT	WBR	NBL	NBT	NBR	SBL	SBT	SBR
Lane Configurations												
Ideal Flow (vphpl)	1900	1900	1900	1900	1900	1900	1900	1900	1900	1900	1900	1900
Total Lost time (s)	4.0	4.0		4.0	4.0		4.0	4.0		4.0	4.0	
Lane Util. Factor	1.00	0.95		1.00	0.95		1.00	0.95		1.00	0.95	
Frpb, ped/bikes	1.00	0.98		1.00	0.96		1.00	0.99		1.00	0.97	
Flpb, ped/bikes	0.94	1.00		0.98	1.00		1.00	1.00		1.00	1.00	
Frt	1.00	0.98		1.00	0.97		1.00	0.99		1.00	0.97	
Flt Protected	0.95	1.00		0.95	1.00		0.95	1.00		0.95	1.00	
Satd. Flow (prot)	1655	3408		1734	3313		1770	3486		1770	3313	
Flt Permitted	0.29	1.00		0.15	1.00		0.95	1.00		0.95	1.00	
Satd. Flow (perm)	513	3408		281	3313		1770	3486		1770	3313	
Volume (vph)	250	720	120	40	490	110	230	1200	80	110	600	180
Peak-hour factor, PHF	0.98	0.98	0.98	0.98	0.98	0.98	0.98	0.98	0.98	0.98	0.98	0.98
Adj. Flow (vph)	255	735	122	41	500	112	235	1224	82	112	612	184
RTOR Reduction (vph)	0	17	0	0	24	0	0	5	0	0	34	0
Lane Group Flow (vph)	255	840	0	41	588	0	235	1301	0	112	762	0
Confl. Peds. (#/hr)	94		86	86		94			40			111
Turn Type	Perm			Perm			Prot			Prot		
Protected Phases		4			8		5	2		1	6	
Permitted Phases	4			8								
Actuated Green, G (s)	25.5	25.5		25.5	25.5		12.6	32.8		8.2	28.4	
Effective Green, g (s)	26.0	26.0		26.0	26.0		13.1	33.3		8.7	28.9	
Actuated g/C Ratio	0.32	0.32		0.32	0.32		0.16	0.42		0.11	0.36	
Clearance Time (s)	4.5	4.5		4.5	4.5		4.5	4.5		4.5	4.5	
Vehicle Extension (s)	2.0	2.0		2.0	2.0		2.0	2.0		2.0	2.0	
Lane Grp Cap (vph)	167	1108		91	1077		290	1451		192	1197	
v/s Ratio Prot		0.25			0.18		c0.13	c0.37		0.06	0.23	
v/s Ratio Perm	c0.50			0.15								
v/c Ratio	1.53	0.76		0.45	0.55		0.81	0.90		0.58	0.64	
Uniform Delay, d1	27.0	24.2		21.4	22.2		32.3	21.7		33.9	21.2	
Progression Factor	1.00	1.00		1.00	1.00		1.00	1.00		1.00	1.00	
Incremental Delay, d2	265.1	2.7		1.3	0.3		14.9	9.0		2.9	2.6	
Delay (s)	292.1	26.9		22.6	22.5		47.1	30.7		36.8	23.8	
Level of Service	F	C		C	C		D	C		D	C	
Approach Delay (s)		87.7			22.5			33.2			25.4	
Approach LOS		F			C			C			C	

Intersection Summary			
HCM Average Control Delay	44.2	HCM Level of Service	D
HCM Volume to Capacity ratio	1.09		
Actuated Cycle Length (s)	80.0	Sum of lost time (s)	8.0
Intersection Capacity Utilization	87.3%	ICU Level of Service	E
Analysis Period (min)	15		

c Critical Lane Group

Movement	EBL	EBR	NBL	NBT	SBT	SBR
Lane Configurations						
Sign Control	Stop			Free	Free	
Grade	0%			0%	0%	
Volume (veh/h)	20	80	20	1460	760	20
Peak Hour Factor	0.96	0.96	0.96	0.96	0.96	0.96
Hourly flow rate (vph)	21	83	21	1521	792	21
Pedestrians	100			100	100	
Lane Width (ft)	12.0			12.0	12.0	
Walking Speed (ft/s)	4.0			4.0	4.0	
Percent Blockage	8			8	8	
Right turn flare (veh)						
Median type	None					
Median storage veh)						
Upstream signal (ft)				396	625	
pX, platoon unblocked	0.82	0.88	0.88			
vC, conflicting volume	1804	606	912			
vC1, stage 1 conf vol						
vC2, stage 2 conf vol						
vCu, unblocked vol	1327	417	765			
tC, single (s)	6.8	6.9	4.1			
tC, 2 stage (s)						
tF (s)	3.5	3.3	2.2			
p0 queue free %	79	81	97			
cM capacity (veh/h)	98	432	681			

Direction, Lane #	EB 1	NB 1	NB 2	NB 3	SB 1	SB 2
Volume Total	104	21	760	760	528	285
Volume Left	21	21	0	0	0	0
Volume Right	83	0	0	0	0	21
cSH	258	681	1700	1700	1700	1700
Volume to Capacity	0.40	0.03	0.45	0.45	0.31	0.17
Queue Length 95th (ft)	46	2	0	0	0	0
Control Delay (s)	28.2	10.5	0.0	0.0	0.0	0.0
Lane LOS	D	B				
Approach Delay (s)	28.2	0.1			0.0	
Approach LOS	D					

Intersection Summary			
Average Delay	1.3		
Intersection Capacity Utilization	60.3%	ICU Level of Service	B
Analysis Period (min)	15		

Movement	WBL	WBR	NBT	NBR	SBL	SBT
Lane Configurations						
Sign Control	Stop		Free			Free
Grade	0%		0%			0%
Volume (veh/h)	20	40	1440	30	20	820
Peak Hour Factor	0.95	0.95	0.95	0.95	0.95	0.95
Hourly flow rate (vph)	21	42	1516	32	21	863
Pedestrians	52		52			45
Lane Width (ft)	12.0		12.0			12.0
Walking Speed (ft/s)	4.0		4.0			4.0
Percent Blockage	4		4			4
Right turn flare (veh)						
Median type	None					
Median storage veh)						
Upstream signal (ft)			230			791
pX, platoon unblocked	0.79	0.75			0.75	
vC, conflicting volume	2109	871			1599	
vC1, stage 1 conf vol						
vC2, stage 2 conf vol						
vCu, unblocked vol	1864	499			1468	
tC, single (s)	6.8	6.9			4.1	
tC, 2 stage (s)						
tF (s)	3.5	3.3			2.2	
p0 queue free %	52	88			94	
cM capacity (veh/h)	43	358			328	

Direction, Lane #	WB 1	NB 1	NB 2	SB 1	SB 2	SB 3
Volume Total	63	1011	537	21	432	432
Volume Left	21	0	0	21	0	0
Volume Right	42	0	32	0	0	0
cSH	105	1700	1700	328	1700	1700
Volume to Capacity	0.60	0.59	0.32	0.06	0.25	0.25
Queue Length 95th (ft)	73	0	0	5	0	0
Control Delay (s)	81.3	0.0	0.0	16.7	0.0	0.0
Lane LOS	F			C		
Approach Delay (s)	81.3	0.0		0.4		
Approach LOS	F					

Intersection Summary			
Average Delay	2.2		
Intersection Capacity Utilization	59.2%	ICU Level of Service	B
Analysis Period (min)	15		

Movement	EBL	EBT	EBR	WBL	WBT	WBR	NBL	NBT	NBR	SBL	SBT	SBR
Lane Configurations												
Ideal Flow (vphpl)	1900	1900	1900	1900	1900	1900	1900	1900	1900	1900	1900	1900
Total Lost time (s)		4.0		4.0	4.0			4.0		4.0	4.0	
Lane Util. Factor		0.91		1.00	0.95			1.00		1.00	1.00	
Frpb, ped/bikes		1.00		1.00	0.99			1.00		1.00	0.99	
Flpb, ped/bikes		1.00		1.00	1.00			1.00		1.00	1.00	
Frt		0.99		1.00	0.96			0.98		1.00	0.98	
Flt Protected		0.99		0.95	1.00			0.99		0.95	1.00	
Satd. Flow (prot)		5017		1768	3395			1797		1764	1809	
Flt Permitted		0.74		0.31	1.00			0.70		0.26	1.00	
Satd. Flow (perm)		3726		569	3395			1274		486	1809	
Volume (vph)	110	680	30	90	650	200	80	370	90	70	270	50
Peak-hour factor, PHF	0.98	0.98	0.98	0.98	0.98	0.98	0.98	0.98	0.98	0.98	0.98	0.98
Adj. Flow (vph)	112	694	31	92	663	204	82	378	92	71	276	51
RTOR Reduction (vph)	0	5	0	0	36	0	0	9	0	0	8	0
Lane Group Flow (vph)	0	832	0	92	831	0	0	543	0	71	319	0
Confl. Peds. (#/hr)	24		4	4		24	24		12	12		24
Turn Type	Perm			Perm			Perm			Perm		
Protected Phases		4			8			2			6	
Permitted Phases	4			8			2			6		
Actuated Green, G (s)		46.0		46.0	46.0			24.0		24.0	24.0	
Effective Green, g (s)		47.0		47.0	47.0			25.0		25.0	25.0	
Actuated g/C Ratio		0.59		0.59	0.59			0.31		0.31	0.31	
Clearance Time (s)		5.0		5.0	5.0			5.0		5.0	5.0	
Lane Grp Cap (vph)		2189		334	1995			398		152	565	
v/s Ratio Prot					c0.24						0.18	
v/s Ratio Perm		0.22		0.16				c0.43		0.15		
v/c Ratio		0.38		0.28	0.42			1.36		0.47	0.56	
Uniform Delay, d1		8.8		8.1	9.0			27.5		22.1	23.0	
Progression Factor		1.00		1.73	1.81			1.00		0.79	0.79	
Incremental Delay, d2		0.5		1.9	0.6			179.5		9.6	3.9	
Delay (s)		9.3		16.0	16.9			207.0		27.0	21.9	
Level of Service		A		B	B			F		C	C	
Approach Delay (s)		9.3			16.8			207.0			22.8	
Approach LOS		A			B			F			C	

Intersection Summary			
HCM Average Control Delay	53.6	HCM Level of Service	D
HCM Volume to Capacity ratio	0.75		
Actuated Cycle Length (s)	80.0	Sum of lost time (s)	8.0
Intersection Capacity Utilization	139.6%	ICU Level of Service	H
Analysis Period (min)	15		
c Critical Lane Group			

Movement	EBL	EBT	EBR	WBL	WBT	WBR	NBL	NBT	NBR	SBL	SBT	SBR
Lane Configurations												
Ideal Flow (vphpl)	1900	1900	1900	1900	1900	1900	1900	1900	1900	1900	1900	1900
Total Lost time (s)		4.0			4.0		4.0	4.0		4.0	4.0	
Lane Util. Factor		0.91			0.91		1.00	1.00		1.00	1.00	
Frpb, ped/bikes		1.00			1.00		1.00	1.00		1.00	1.00	
Flpb, ped/bikes		1.00			1.00		1.00	1.00		1.00	1.00	
Frt		0.99			0.98		1.00	0.96		1.00	0.98	
Flt Protected		0.99			1.00		0.95	1.00		0.95	1.00	
Satd. Flow (prot)		5004			4946		1770	1789		1763	1829	
Flt Permitted		0.76			0.81		0.42	1.00		0.33	1.00	
Satd. Flow (perm)		3811			4041		773	1789		609	1829	
Volume (vph)	80	590	40	80	750	150	60	230	70	70	220	30
Peak-hour factor, PHF	0.95	0.95	0.95	0.95	0.95	0.95	0.95	0.95	0.95	0.95	0.95	0.95
Adj. Flow (vph)	84	621	42	84	789	158	63	242	74	74	232	32
RTOR Reduction (vph)	0	8	0	0	32	0	0	14	0	0	6	0
Lane Group Flow (vph)	0	739	0	0	999	0	63	302	0	74	258	0
Confl. Peds. (#/hr)			12	12					6	6		
Turn Type	Perm			Perm			Perm			Perm		
Protected Phases		4			8			2			6	
Permitted Phases	4			8			2			6		
Actuated Green, G (s)		51.5			51.5		20.5	20.5		20.5	20.5	
Effective Green, g (s)		51.5			51.5		20.5	20.5		20.5	20.5	
Actuated g/C Ratio		0.64			0.64		0.26	0.26		0.26	0.26	
Clearance Time (s)		4.0			4.0		4.0	4.0		4.0	4.0	
Lane Grp Cap (vph)		2453			2601		198	458		156	469	
v/s Ratio Prot								c0.17			0.14	
v/s Ratio Perm		0.19			c0.25		0.08			0.12		
v/c Ratio		0.30			0.38		0.32	0.66		0.47	0.55	
Uniform Delay, d1		6.3			6.7		24.1	26.6		25.2	25.8	
Progression Factor		1.27			1.69		1.00	1.00		1.12	1.13	
Incremental Delay, d2		0.3			0.4		4.2	7.3		9.4	4.3	
Delay (s)		8.3			11.8		28.3	33.9		37.7	33.5	
Level of Service		A			B		C	C		D	C	
Approach Delay (s)		8.3			11.8			32.9			34.4	
Approach LOS		A			B			C			C	

Intersection Summary			
HCM Average Control Delay	17.0	HCM Level of Service	B
HCM Volume to Capacity ratio	0.46		
Actuated Cycle Length (s)	80.0	Sum of lost time (s)	8.0
Intersection Capacity Utilization	79.8%	ICU Level of Service	D
Analysis Period (min)	15		
c Critical Lane Group			

Movement	EBL	EBT	EBR	WBL	WBT	WBR	NBL	NBT	NBR	SBL	SBT	SBR
Lane Configurations												
Ideal Flow (vphpl)	1900	1900	1900	1900	1900	1900	1900	1900	1900	1900	1900	1900
Total Lost time (s)		4.0			4.0			4.0			4.0	
Lane Util. Factor		0.91			0.91			0.95			0.95	
Frpb, ped/bikes		1.00			1.00			1.00			1.00	
Flpb, ped/bikes		1.00			1.00			1.00			1.00	
Frt		0.99			0.97			0.98			0.98	
Flt Protected		0.99			1.00			0.99			0.99	
Satd. Flow (prot)		5009			4893			3423			3415	
Flt Permitted		0.74			0.86			0.85			0.70	
Satd. Flow (perm)		3749			4198			2926			2414	
Volume (vph)	80	630	40	60	870	250	60	300	60	80	200	40
Peak-hour factor, PHF	0.99	0.99	0.99	0.99	0.99	0.99	0.99	0.99	0.99	0.99	0.99	0.99
Adj. Flow (vph)	81	636	40	61	879	253	61	303	61	81	202	40
RTOR Reduction (vph)	0	7	0	0	61	0	0	17	0	0	14	0
Lane Group Flow (vph)	0	750	0	0	1132	0	0	408	0	0	309	0
Confl. Peds. (#/hr)	9		17	17		9	12		10	10		12
Turn Type	Perm			Perm			Perm			Perm		
Protected Phases		4			8			2			6	
Permitted Phases	4			8			2			6		
Actuated Green, G (s)		50.0			50.0			19.0			19.0	
Effective Green, g (s)		51.5			51.5			20.5			20.5	
Actuated g/C Ratio		0.64			0.64			0.26			0.26	
Clearance Time (s)		5.5			5.5			5.5			5.5	
Lane Grp Cap (vph)		2413			2702			750			619	
v/s Ratio Prot												
v/s Ratio Perm		0.20			c0.27			c0.14			0.13	
v/c Ratio		0.31			0.42			0.54			0.50	
Uniform Delay, d1		6.3			7.0			25.7			25.4	
Progression Factor		1.48			1.00			1.00			1.28	
Incremental Delay, d2		0.3			0.5			2.8			2.8	
Delay (s)		9.7			7.4			28.5			35.2	
Level of Service		A			A			C			D	
Approach Delay (s)		9.7			7.4			28.5			35.2	
Approach LOS		A			A			C			D	

Intersection Summary			
HCM Average Control Delay	14.7	HCM Level of Service	B
HCM Volume to Capacity ratio	0.45		
Actuated Cycle Length (s)	80.0	Sum of lost time (s)	8.0
Intersection Capacity Utilization	107.3%	ICU Level of Service	G
Analysis Period (min)	15		
c Critical Lane Group			

Movement	EBL	EBT	WBT	WBR	SBL	SBR
Lane Configurations						
Sign Control		Free	Free		Stop	
Grade		0%	0%		0%	
Volume (veh/h)	0	800	950	20	0	230
Peak Hour Factor	0.96	0.96	0.96	0.96	0.96	0.96
Hourly flow rate (vph)	0	833	990	21	0	240
Pedestrians		79			79	
Lane Width (ft)		12.0			12.0	
Walking Speed (ft/s)		4.0			4.0	
Percent Blockage		7			7	
Right turn flare (veh)						
Median type					None	
Median storage veh)						
Upstream signal (ft)		698	473			
pX, platoon unblocked						
vC, conflicting volume	1089				1357	498
vC1, stage 1 conf vol						
vC2, stage 2 conf vol						
vCu, unblocked vol	1089				1357	498
tC, single (s)	4.1				6.8	6.9
tC, 2 stage (s)						
tF (s)	2.2				3.5	3.3
p0 queue free %	100				100	47
cM capacity (veh/h)	594				131	452

Direction, Lane #	EB 1	EB 2	EB 3	WB 1	WB 2	WB 3	SB 1
Volume Total	278	278	278	396	396	219	240
Volume Left	0	0	0	0	0	0	0
Volume Right	0	0	0	0	0	21	240
cSH	1700	1700	1700	1700	1700	1700	452
Volume to Capacity	0.16	0.16	0.16	0.23	0.23	0.13	0.53
Queue Length 95th (ft)	0	0	0	0	0	0	76
Control Delay (s)	0.0	0.0	0.0	0.0	0.0	0.0	21.6
Lane LOS							C
Approach Delay (s)	0.0			0.0			21.6
Approach LOS							C

Intersection Summary			
Average Delay	2.5		
Intersection Capacity Utilization	45.1%	ICU Level of Service	A
Analysis Period (min)	15		

Movement	EBL	EBT	EBR	WBL	WBT	WBR	NBL	NBT	NBR	SBL	SBT	SBR
Lane Configurations												
Ideal Flow (vphpl)	1900	1900	1900	1900	1900	1900	1900	1900	1900	1900	1900	1900
Total Lost time (s)		4.0			4.0		4.0	4.0		4.0	4.0	
Lane Util. Factor		0.91			0.91		1.00	0.95		1.00	0.95	
Frpb, ped/bikes		1.00			0.99		1.00	0.99		1.00	1.00	
Flpb, ped/bikes		1.00			1.00		0.99	1.00		0.99	1.00	
Frt		0.99			0.95		1.00	0.98		1.00	0.99	
Flt Protected		0.99			1.00		0.95	1.00		0.95	1.00	
Satd. Flow (prot)		4959			4760		1747	3449		1743	3473	
Flt Permitted		0.66			0.79		0.32	1.00		0.16	1.00	
Satd. Flow (perm)		3332			3771		595	3449		297	3473	
Volume (vph)	180	570	60	90	780	420	100	870	100	220	570	60
Peak-hour factor, PHF	0.95	0.95	0.95	0.95	0.95	0.95	0.95	0.95	0.95	0.95	0.95	0.95
Adj. Flow (vph)	189	600	63	95	821	442	105	916	105	232	600	63
RTOR Reduction (vph)	0	7	0	0	7	0	0	7	0	0	7	0
Lane Group Flow (vph)	0	845	0	0	1351	0	105	1014	0	232	656	0
Confl. Peds. (#/hr)	26		19			26	39		92	92		39
Turn Type	Perm			pm+pt			Perm			Perm		
Protected Phases		4		3	8			2			6	
Permitted Phases	4			8			2			6		
Actuated Green, G (s)		35.1			35.1		34.4	34.4		34.4	34.4	
Effective Green, g (s)		36.6			36.6		35.4	35.4		35.4	35.4	
Actuated g/C Ratio		0.46			0.46		0.44	0.44		0.44	0.44	
Clearance Time (s)		5.5			5.5		5.0	5.0		5.0	5.0	
Vehicle Extension (s)		2.0			2.0		2.0	2.0		2.0	2.0	
Lane Grp Cap (vph)		1524			1725		263	1526		131	1537	
v/s Ratio Prot								0.29			0.19	
v/s Ratio Perm		0.25			c0.36		0.18			c0.78		
v/c Ratio		1.14dl			0.78		0.40	0.66		1.77	0.43	
Uniform Delay, d1		15.8			18.3		15.1	17.6		22.3	15.3	
Progression Factor		1.00			1.00		1.00	1.00		1.00	1.00	
Incremental Delay, d2		0.2			2.2		4.5	2.3		376.1	0.9	
Delay (s)		16.0			20.6		19.6	19.9		398.4	16.2	
Level of Service		B			C		B	B		F	B	
Approach Delay (s)		16.0			20.6			19.9			115.3	
Approach LOS		B			C			B			F	

Intersection Summary			
HCM Average Control Delay	39.5	HCM Level of Service	D
HCM Volume to Capacity ratio	1.27		
Actuated Cycle Length (s)	80.0	Sum of lost time (s)	8.0
Intersection Capacity Utilization	98.0%	ICU Level of Service	F
Analysis Period (min)	15		

dl Defacto Left Lane. Recode with 1 though lane as a left lane.
c Critical Lane Group

Movement	EBL	EBT	EBR	WBL	WBT	WBR	NBL	NBT	NBR	SBL	SBT	SBR
Lane Configurations												
Ideal Flow (vphpl)	1900	1900	1900	1900	1900	1900	1900	1900	1900	1900	1900	1900
Total Lost time (s)		4.0			4.0			4.0	4.0		4.0	
Lane Util. Factor		0.91			0.91			1.00	1.00		1.00	
Frpb, ped/bikes		1.00			1.00			1.00	0.89		0.94	
Flpb, ped/bikes		1.00			1.00			0.96	1.00		0.98	
Frt		1.00			1.00			1.00	0.85		0.92	
Flt Protected		1.00			1.00			0.98	1.00		0.99	
Satd. Flow (prot)		5031			5018			1748	1406		1565	
Flt Permitted		0.84			0.78			0.82	1.00		0.92	
Satd. Flow (perm)		4236			3942			1461	1406		1457	
Volume (vph)	40	850	30	100	1160	40	90	90	200	30	30	80
Peak-hour factor, PHF	0.99	0.99	0.99	0.99	0.99	0.99	0.99	0.99	0.99	0.99	0.99	0.99
Adj. Flow (vph)	40	859	30	101	1172	40	91	91	202	30	30	81
RTOR Reduction (vph)	0	4	0	0	4	0	0	0	77	0	37	0
Lane Group Flow (vph)	0	925	0	0	1309	0	0	182	125	0	104	0
Confl. Peds. (#/hr)	100		100	100		100	100		100	100		100
Turn Type	Perm			Perm			Perm		Perm	Perm		
Protected Phases		4			8			2			6	
Permitted Phases	4			8			2		2	6		
Actuated Green, G (s)		49.5			49.5			24.5	24.5		24.5	
Effective Green, g (s)		48.5			48.5			23.5	23.5		23.5	
Actuated g/C Ratio		0.61			0.61			0.29	0.29		0.29	
Clearance Time (s)		3.0			3.0			3.0	3.0		3.0	
Lane Grp Cap (vph)		2568			2390			429	413		428	
v/s Ratio Prot												
v/s Ratio Perm		0.22			c0.33			c0.12	0.09		0.07	
v/c Ratio		0.36			0.55			0.42	0.30		0.24	
Uniform Delay, d1		7.9			9.3			22.8	21.9		21.5	
Progression Factor		1.00			1.00			1.00	1.00		1.00	
Incremental Delay, d2		0.4			0.9			3.1	1.9		1.3	
Delay (s)		8.3			10.2			25.8	23.8		22.8	
Level of Service		A			B			C	C		C	
Approach Delay (s)		8.3			10.2			24.8			22.8	
Approach LOS		A			B			C			C	

Intersection Summary			
HCM Average Control Delay	12.2	HCM Level of Service	B
HCM Volume to Capacity ratio	0.51		
Actuated Cycle Length (s)	80.0	Sum of lost time (s)	8.0
Intersection Capacity Utilization	108.2%	ICU Level of Service	G
Analysis Period (min)	15		

c Critical Lane Group

Movement	EBL	EBT	EBR	WBL	WBT	WBR	NBL	NBT	NBR	SBL	SBT	SBR
Lane Configurations												
Ideal Flow (vphpl)	1900	1900	1900	1900	1900	1900	1900	1900	1900	1900	1900	1900
Total Lost time (s)	4.0	4.0		4.0	4.0		4.0	4.0	4.0	4.0	4.0	4.0
Lane Util. Factor	1.00	0.91		1.00	0.91		1.00	0.95	1.00	1.00	0.95	1.00
Frpb, ped/bikes	1.00	0.98		1.00	0.99		1.00	1.00	0.94	1.00	1.00	0.95
Flpb, ped/bikes	1.00	1.00		1.00	1.00		1.00	1.00	1.00	1.00	1.00	1.00
Frt	1.00	0.98		1.00	0.97		1.00	1.00	0.85	1.00	1.00	0.85
Flt Protected	0.95	1.00		0.95	1.00		0.95	1.00	1.00	0.95	1.00	1.00
Satd. Flow (prot)	1770	4919		1770	4884		1770	3539	1488	1770	3539	1497
Flt Permitted	0.95	1.00		0.95	1.00		0.95	1.00	1.00	0.95	1.00	1.00
Satd. Flow (perm)	1770	4919		1770	4884		1770	3539	1488	1770	3539	1497
Volume (vph)	200	750	100	110	930	240	230	850	180	380	420	110
Peak-hour factor, PHF	0.95	0.95	0.95	0.95	0.95	0.95	0.95	0.95	0.95	0.95	0.95	0.95
Adj. Flow (vph)	211	789	105	116	979	253	242	895	189	400	442	116
RTOR Reduction (vph)	0	14	0	0	38	0	0	0	24	0	0	69
Lane Group Flow (vph)	211	880	0	116	1194	0	242	895	165	400	442	47
Confl. Peds. (#/hr)			81			22			50			43
Turn Type	Prot			Prot			Prot		pm ov	Prot		pm ov
Protected Phases	7	4		3	8		5	2	3	1	6	7
Permitted Phases									2			6
Actuated Green, G (s)	12.0	34.0		12.0	34.0		21.0	33.0	45.0	25.0	37.0	49.0
Effective Green, g (s)	11.0	35.0		11.0	35.0		20.0	34.0	45.0	24.0	38.0	49.0
Actuated g/C Ratio	0.09	0.29		0.09	0.29		0.17	0.28	0.38	0.20	0.32	0.41
Clearance Time (s)	3.0	5.0		3.0	5.0		3.0	5.0	3.0	3.0	5.0	3.0
Vehicle Extension (s)	3.0	3.0		3.0	3.0		3.0	3.0	3.0	3.0	3.0	3.0
Lane Grp Cap (vph)	162	1435		162	1425		295	1003	608	354	1121	661
v/s Ratio Prot	c0.12	0.18		0.07	c0.24		0.14	c0.25	0.02	c0.23	c0.12	0.01
v/s Ratio Perm									0.09			0.03
v/c Ratio	1.30	0.61		0.72	0.84		0.82	0.89	0.27	1.13	0.39	0.07
Uniform Delay, d1	54.5	36.7		53.0	39.8		48.3	41.2	26.1	48.0	32.0	21.6
Progression Factor	1.00	1.00		1.00	1.00		1.00	1.00	1.00	1.00	1.00	1.00
Incremental Delay, d2	173.6	2.0		14.0	6.0		16.5	11.9	0.2	87.9	1.0	0.0
Delay (s)	228.1	38.6		67.0	45.9		64.7	53.2	26.3	135.9	33.1	21.7
Level of Service	F	D		E	D		E	D	C	F	C	C
Approach Delay (s)		74.8			47.7			51.5			74.6	
Approach LOS		E			D			D			E	

Intersection Summary			
HCM Average Control Delay	60.5	HCM Level of Service	E
HCM Volume to Capacity ratio	0.99		
Actuated Cycle Length (s)	120.0	Sum of lost time (s)	20.0
Intersection Capacity Utilization	92.7%	ICU Level of Service	F
Analysis Period (min)	15		

c Critical Lane Group

Movement	EBL	EBT	EBR	WBL	WBT	WBR	NBL	NBT	NBR	SBL	SBT	SBR
Lane Configurations												
Ideal Flow (vphpl)	1900	1900	1900	1900	1900	1900	1900	1900	1900	1900	1900	1900
Total Lost time (s)		4.0			4.0		4.0	4.0		4.0	4.0	
Lane Util. Factor		1.00			1.00		1.00	0.95		1.00	0.95	
Frpb, ped/bikes		0.94			0.96		1.00	0.99		1.00	0.99	
Flpb, ped/bikes		0.97			0.97		0.95	1.00		0.94	1.00	
Frt		0.96			0.96		1.00	0.99		1.00	0.99	
Flt Protected		0.98			0.98		0.95	1.00		0.95	1.00	
Satd. Flow (prot)		1590			1639		1689	3454		1669	3454	
Flt Permitted		0.67			0.81		0.30	1.00		0.35	1.00	
Satd. Flow (perm)		1094			1355		527	3454		616	3454	
Volume (vph)	110	50	70	60	70	60	140	650	50	40	770	60
Peak-hour factor, PHF	0.95	0.95	0.95	0.95	0.95	0.95	0.95	0.95	0.95	0.95	0.95	0.95
Adj. Flow (vph)	116	53	74	63	74	63	147	684	53	42	811	63
RTOR Reduction (vph)	0	20	0	0	21	0	0	6	0	0	6	0
Lane Group Flow (vph)	0	223	0	0	179	0	147	731	0	42	868	0
Confl. Peds. (#/hr)	100		100	100		100	100		100	100		100
Turn Type	Perm			Perm			Perm			Perm		
Protected Phases		4			4			2			6	
Permitted Phases	4			4			2			6		
Actuated Green, G (s)		19.1			19.1		58.9	58.9		58.9	58.9	
Effective Green, g (s)		18.6			18.6		58.4	58.4		58.4	58.4	
Actuated g/C Ratio		0.22			0.22		0.69	0.69		0.69	0.69	
Clearance Time (s)		3.5			3.5		3.5	3.5		3.5	3.5	
Vehicle Extension (s)		2.0			2.0		2.0	2.0		2.0	2.0	
Lane Grp Cap (vph)		239			297		362	2373		423	2373	
v/s Ratio Prot								0.21			0.25	
v/s Ratio Perm		c0.20			0.13		c0.28			0.07		
v/c Ratio		0.93			0.60		0.41	0.31		0.10	0.37	
Uniform Delay, d1		32.6			29.9		5.8	5.3		4.5	5.6	
Progression Factor		1.00			1.00		1.00	1.00		1.00	1.00	
Incremental Delay, d2		39.4			2.4		3.4	0.3		0.5	0.4	
Delay (s)		72.0			32.2		9.1	5.6		4.9	6.0	
Level of Service		E			C		A	A		A	A	
Approach Delay (s)		72.0			32.2			6.2			5.9	
Approach LOS		E			C			A			A	

Intersection Summary			
HCM Average Control Delay	15.5	HCM Level of Service	B
HCM Volume to Capacity ratio	0.53		
Actuated Cycle Length (s)	85.0	Sum of lost time (s)	8.0
Intersection Capacity Utilization	63.8%	ICU Level of Service	B
Analysis Period (min)	15		

c Critical Lane Group

Movement	EBL	EBT	EBR	WBL	WBT	WBR	NBL	NBT	NBR	SBL	SBT	SBR
Lane Configurations												
Ideal Flow (vphpl)	1900	1900	1900	1900	1900	1900	1900	1900	1900	1900	1900	1900
Total Lost time (s)	4.0	4.0		4.0	4.0		4.0	4.0		4.0	4.0	
Lane Util. Factor	1.00	0.95		1.00	0.95		1.00	0.95		1.00	0.95	
Frpb, ped/bikes	1.00	0.97		1.00	0.94		1.00	0.99		1.00	0.93	
Flpb, ped/bikes	1.00	1.00		1.00	1.00		0.96	1.00		0.97	1.00	
Frt	1.00	0.97		1.00	0.96		1.00	0.99		1.00	0.94	
Flt Protected	0.95	1.00		0.95	1.00		0.95	1.00		0.95	1.00	
Satd. Flow (prot)	1770	3340		1770	3179		1695	3474		1714	3122	
Flt Permitted	0.95	1.00		0.95	1.00		0.28	1.00		0.33	1.00	
Satd. Flow (perm)	1770	3340		1770	3179		491	3474		589	3122	
Volume (vph)	140	420	110	70	440	180	170	640	50	110	500	300
Peak-hour factor, PHF	0.98	0.98	0.98	0.98	0.98	0.98	0.98	0.98	0.98	0.98	0.98	0.98
Adj. Flow (vph)	143	429	112	71	449	184	173	653	51	112	510	306
RTOR Reduction (vph)	0	28	0	0	55	0	0	6	0	0	96	0
Lane Group Flow (vph)	143	513	0	71	578	0	173	698	0	112	720	0
Confl. Peds. (#/hr)			100			100	100		100	100		100
Turn Type	Prot			Prot			Perm			Perm		
Protected Phases	7	4		3	8			2			6	
Permitted Phases							2			6		
Actuated Green, G (s)	9.5	22.2		6.7	19.4		42.6	42.6		42.6	42.6	
Effective Green, g (s)	10.0	21.7		7.2	18.9		44.1	44.1		44.1	44.1	
Actuated g/C Ratio	0.12	0.26		0.08	0.22		0.52	0.52		0.52	0.52	
Clearance Time (s)	4.5	3.5		4.5	3.5		5.5	5.5		5.5	5.5	
Vehicle Extension (s)	2.0	2.0		2.0	2.0		2.0	2.0		2.0	2.0	
Lane Grp Cap (vph)	208	853		150	707		255	1802		306	1620	
v/s Ratio Prot	c0.08	c0.15		0.04	c0.18			0.20			0.23	
v/s Ratio Perm							c0.35			0.19		
v/c Ratio	0.69	0.60		0.47	0.82		0.68	0.39		0.37	0.44	
Uniform Delay, d1	36.0	27.8		37.1	31.4		15.2	12.3		12.1	12.8	
Progression Factor	1.00	1.00		1.00	1.00		1.00	1.00		1.00	1.00	
Incremental Delay, d2	7.3	0.8		0.9	6.9		13.6	0.6		3.4	0.9	
Delay (s)	43.3	28.7		38.0	38.3		28.8	12.9		15.5	13.7	
Level of Service	D	C		D	D		C	B		B	B	
Approach Delay (s)		31.7			38.3			16.1			13.9	
Approach LOS		C			D			B			B	

Intersection Summary			
HCM Average Control Delay	23.7	HCM Level of Service	C
HCM Volume to Capacity ratio	0.75		
Actuated Cycle Length (s)	85.0	Sum of lost time (s)	16.0
Intersection Capacity Utilization	75.8%	ICU Level of Service	D
Analysis Period (min)	15		

c Critical Lane Group

APPENDIX F:
YEAR 2015 PLUS PROJCT CONDITIONS INTERSECTION LEVEL OF SERVICE CALCULATION WORKSHEETS

Movement	EBL	EBT	EBR	WBL	WBT	WBR	NBL	NBT	NBR	SBL	SBT	SBR
Lane Configurations												
Ideal Flow (vphpl)	1900	1900	1900	1900	1900	1900	1900	1900	1900	1900	1900	1900
Lane Width	12	12	12	12	12	12	16	16	16	16	16	16
Total Lost time (s)	4.0	4.0		4.0	4.0		2.0	2.0		2.0	2.0	
Lane Util. Factor	1.00	0.91		1.00	0.91		1.00	1.00		1.00	1.00	
Frpb, ped/bikes	1.00	0.99		1.00	0.99		1.00	0.99		1.00	0.98	
Flpb, ped/bikes	1.00	1.00		1.00	1.00		1.00	1.00		0.99	1.00	
Frt	1.00	0.97		1.00	0.98		1.00	0.97		1.00	0.94	
Flt Protected	0.95	1.00		0.95	1.00		0.95	1.00		0.95	1.00	
Satd. Flow (prot)	1770	4907		1770	4953		2006	2043		1985	1956	
Flt Permitted	0.95	1.00		0.95	1.00		0.10	1.00		0.45	1.00	
Satd. Flow (perm)	1770	4907		1770	4953		201	2043		930	1956	
Volume (vph)	300	951	205	90	1330	200	200	289	60	160	415	270
Peak-hour factor, PHF	0.95	0.95	0.95	0.95	0.95	0.95	0.95	0.95	0.95	0.95	0.95	0.95
Adj. Flow (vph)	316	1001	216	95	1400	211	211	304	63	168	437	284
RTOR Reduction (vph)	0	26	0	0	16	0	0	7	0	0	19	0
Lane Group Flow (vph)	316	1191	0	95	1595	0	211	360	0	168	702	0
Confl. Peds. (#/hr)			10	10		10	10		10	10		10
Turn Type	Prot			Prot			pm+pt			Perm		
Protected Phases	7	4		3	8		5	2			6	
Permitted Phases							2			6		
Actuated Green, G (s)	17.0	49.4		11.6	44.0		48.5	48.5		39.5	39.5	
Effective Green, g (s)	17.0	49.4		11.6	44.0		49.0	49.0		40.0	40.0	
Actuated g/C Ratio	0.14	0.41		0.10	0.37		0.41	0.41		0.33	0.33	
Clearance Time (s)	4.0	4.0		4.0	4.0		4.0	2.5		2.5	2.5	
Vehicle Extension (s)	3.0	3.0		3.0	3.0		3.0	3.0		3.0	3.0	
Lane Grp Cap (vph)	251	2020		171	1816		187	834		310	652	
v/s Ratio Prot	c0.18	0.24		0.05	c0.32		c0.07	0.18			c0.36	
v/s Ratio Perm							0.39			0.18		
v/c Ratio	1.26	0.59		0.56	0.88		1.13	0.43		0.54	1.08	
Uniform Delay, d1	51.5	27.4		51.7	35.5		58.7	25.5		32.5	40.0	
Progression Factor	1.00	1.00		1.00	1.00		1.00	1.00		1.00	1.00	
Incremental Delay, d2	144.6	1.3		3.9	6.4		104.5	0.4		1.9	57.5	
Delay (s)	196.1	28.7		55.6	41.9		163.2	25.9		34.5	97.5	
Level of Service	F	C		E	D		F	C		C	F	
Approach Delay (s)		63.2			42.7			76.0			85.6	
Approach LOS		E			D			E			F	

Intersection Summary			
HCM Average Control Delay	61.6	HCM Level of Service	E
HCM Volume to Capacity ratio	1.02		
Actuated Cycle Length (s)	120.0	Sum of lost time (s)	12.0
Intersection Capacity Utilization	110.0%	ICU Level of Service	H
Analysis Period (min)	15		

c Critical Lane Group

Movement	EBL	EBT	EBR	WBL	WBT	WBR	NBL	NBT	NBR	SBL	SBT	SBR
Lane Configurations												
Ideal Flow (vphpl)	1900	1900	1900	1900	1900	1900	1900	1900	1900	1900	1900	1900
Total Lost time (s)		4.0		4.0	4.0			4.0		4.0	4.0	
Lane Util. Factor		1.00		0.95	0.95			0.95		1.00	0.95	
Frpb, ped/bikes		1.00		1.00	0.99			0.99		1.00	0.96	
Flpb, ped/bikes		1.00		1.00	1.00			1.00		1.00	1.00	
Frt		0.95		1.00	0.91			0.97		1.00	0.96	
Flt Protected		0.98		0.95	1.00			1.00		0.95	1.00	
Satd. Flow (prot)		1748		1681	1596			3420		1770	3268	
Flt Permitted		0.48		0.74	1.00			0.93		0.95	1.00	
Satd. Flow (perm)		846		1302	1596			3197		1770	3268	
Volume (vph)	10	10	10	174	110	160	10	1158	236	100	1149	450
Peak-hour factor, PHF	0.95	0.95	0.95	0.95	0.95	0.95	0.95	0.95	0.95	0.95	0.95	0.95
Adj. Flow (vph)	11	11	11	183	116	168	11	1219	248	105	1209	474
RTOR Reduction (vph)	0	10	0	0	68	0	0	14	0	0	33	0
Lane Group Flow (vph)	0	23	0	183	216	0	0	1464	0	105	1650	0
Confl. Peds. (#/hr)	4					4	44		12			44
Turn Type	Perm			Perm			Perm			Prot		
Protected Phases		7			8			2		1	6	
Permitted Phases	7			8			2					
Actuated Green, G (s)		5.1		16.2	16.2			43.0		7.7	55.2	
Effective Green, g (s)		5.6		16.7	16.7			43.5		8.2	55.7	
Actuated g/C Ratio		0.06		0.19	0.19			0.48		0.09	0.62	
Clearance Time (s)		4.5		4.5	4.5			4.5		4.5	4.5	
Vehicle Extension (s)		2.0		2.0	2.0			2.0		2.0	2.0	
Lane Grp Cap (vph)		53		242	296			1545		161	2023	
v/s Ratio Prot										0.06	c0.51	
v/s Ratio Perm		c0.03		c0.14	0.14			c0.46				
v/c Ratio		0.43		0.76	0.73			0.95		0.65	0.82	
Uniform Delay, d1		40.7		34.7	34.5			22.2		39.5	13.2	
Progression Factor		1.00		1.00	1.00			1.01		1.00	1.00	
Incremental Delay, d2		2.0		11.3	7.8			5.8		7.0	3.8	
Delay (s)		42.7		46.0	42.3			28.1		46.5	17.0	
Level of Service		D		D	D			C		D	B	
Approach Delay (s)		42.7			43.8			28.1			18.7	
Approach LOS		D			D			C			B	

Intersection Summary			
HCM Average Control Delay	25.7	HCM Level of Service	C
HCM Volume to Capacity ratio	0.87		
Actuated Cycle Length (s)	90.0	Sum of lost time (s)	16.0
Intersection Capacity Utilization	107.6%	ICU Level of Service	G
Analysis Period (min)	15		

c Critical Lane Group

Movement	EBL	EBT	EBR	WBL	WBT	WBR	NBL	NBT	NBR	SBL	SBT	SBR
Lane Configurations												
Ideal Flow (vphpl)	1900	1900	1900	1900	1900	1900	1900	1900	1900	1900	1900	1900
Total Lost time (s)	4.0	4.0		4.0	4.0		4.0	4.0		4.0	4.0	
Lane Util. Factor	0.97	0.95		1.00	0.95		1.00	0.95		1.00	0.95	
Frpb, ped/bikes	1.00	0.99		1.00	0.99		1.00	0.99		1.00	0.98	
Flpb, ped/bikes	1.00	1.00		1.00	1.00		1.00	1.00		1.00	1.00	
Frt	1.00	0.98		1.00	0.95		1.00	0.98		1.00	0.97	
Flt Protected	0.95	1.00		0.95	1.00		0.95	1.00		0.95	1.00	
Satd. Flow (prot)	3433	3437		1770	3356		1770	3418		1770	3395	
Flt Permitted	0.95	1.00		0.95	1.00		0.95	1.00		0.95	1.00	
Satd. Flow (perm)	3433	3437		1770	3356		1770	3418		1770	3395	
Volume (vph)	460	590	91	120	700	310	110	664	120	280	883	180
Peak-hour factor, PHF	0.96	0.96	0.96	0.96	0.96	0.96	0.96	0.96	0.96	0.96	0.96	0.96
Adj. Flow (vph)	479	615	95	125	729	323	115	692	125	292	920	188
RTOR Reduction (vph)	0	13	0	0	56	0	0	17	0	0	18	0
Lane Group Flow (vph)	479	697	0	125	996	0	115	800	0	292	1090	0
Confl. Peds. (#/hr)	6		24	24		6	36		28	28		36
Turn Type	Prot			Prot			Prot			Prot		
Protected Phases	7	4		3	8		5	2		1	6	
Permitted Phases												
Actuated Green, G (s)	13.0	28.9		9.6	25.5		8.1	23.5		11.0	26.4	
Effective Green, g (s)	12.5	29.9		9.1	26.5		7.6	24.5		10.5	27.4	
Actuated g/C Ratio	0.14	0.33		0.10	0.29		0.08	0.27		0.12	0.30	
Clearance Time (s)	3.5	5.0		3.5	5.0		3.5	5.0		3.5	5.0	
Vehicle Extension (s)	2.0	2.0		2.0	2.0		2.0	2.0		2.0	2.0	
Lane Grp Cap (vph)	477	1142		179	988		149	930		207	1034	
v/s Ratio Prot	c0.14	c0.20		0.07	c0.30		0.06	0.23		c0.17	c0.32	
v/s Ratio Perm												
v/c Ratio	1.00	0.61		0.70	1.01		0.77	0.86		1.41	1.05	
Uniform Delay, d1	38.8	25.2		39.1	31.8		40.4	31.1		39.8	31.3	
Progression Factor	1.00	1.00		1.00	1.00		1.00	1.00		1.14	0.88	
Incremental Delay, d2	42.2	0.7		9.2	30.7		19.9	10.3		201.0	37.4	
Delay (s)	81.0	25.8		48.3	62.4		60.2	41.4		246.5	64.9	
Level of Service	F	C		D	E		E	D		F	E	
Approach Delay (s)		48.1			60.9			43.7			102.8	
Approach LOS		D			E			D			F	

Intersection Summary			
HCM Average Control Delay	66.7	HCM Level of Service	E
HCM Volume to Capacity ratio	1.14		
Actuated Cycle Length (s)	90.0	Sum of lost time (s)	20.0
Intersection Capacity Utilization	94.0%	ICU Level of Service	F
Analysis Period (min)	15		

c Critical Lane Group

Movement	EBL	EBT	EBR	WBL	WBT	WBR	NBL	NBT	NBR	SBL	SBT	SBR
Lane Configurations												
Ideal Flow (vphpl)	1900	1900	1900	1900	1900	1900	1900	1900	1900	1900	1900	1900
Total Lost time (s)		4.0						4.0		4.0	4.0	
Lane Util. Factor		1.00						0.95		0.97	0.95	
Frt		0.86						0.93		1.00	0.98	
Flt Protected		1.00						1.00		0.95	1.00	
Satd. Flow (prot)		1611						3283		3433	3475	
Flt Permitted		1.00						0.94		0.95	1.00	
Satd. Flow (perm)		1611						3094		3433	3475	
Volume (vph)	0	0	10	0	0	0	10	346	325	1600	434	60
Peak-hour factor, PHF	0.95	0.95	0.95	0.95	0.95	0.95	0.95	0.95	0.95	0.95	0.95	0.95
Adj. Flow (vph)	0	0	11	0	0	0	11	364	342	1684	457	63
RTOR Reduction (vph)	0	11	0	0	0	0	0	26	0	0	0	0
Lane Group Flow (vph)	0	0	0	0	0	0	0	691	0	1684	520	0
Turn Type										Prot		
Protected Phases								2		1	6	
Permitted Phases												
Actuated Green, G (s)		0.0						8.0		29.0	45.0	
Effective Green, g (s)		0.0						8.0		29.0	45.0	
Actuated g/C Ratio		0.00						0.18		0.64	1.00	
Clearance Time (s)								4.0		4.0	2.0	
Lane Grp Cap (vph)		0						550		2212	3475	
v/s Ratio Prot										c0.49	0.15	
v/s Ratio Perm								c0.22				
v/c Ratio		0.00						10.69dr		0.76	0.15	
Uniform Delay, d1		22.5						18.5		5.6	0.0	
Progression Factor		1.00						0.76		1.00	1.00	
Incremental Delay, d2		0.0						128.5		2.5	0.1	
Delay (s)		22.5						142.7		8.1	0.1	
Level of Service		C						F		A	A	
Approach Delay (s)		22.5			0.0			142.7			6.2	
Approach LOS		C			A			F			A	

Intersection Summary			
HCM Average Control Delay	39.6	HCM Level of Service	D
HCM Volume to Capacity ratio	0.87		
Actuated Cycle Length (s)	45.0	Sum of lost time (s)	8.0
Intersection Capacity Utilization	79.3%	ICU Level of Service	D
Analysis Period (min)	15		

dr Defacto Right Lane. Recode with 1 though lane as a right lane.

c Critical Lane Group

Movement	EBL	EBT	EBR	WBL	WBT	WBR	NBL	NBT	NBR	SBL	SBT	SBR
Lane Configurations												
Ideal Flow (vphpl)	1900	1900	1900	1900	1900	1900	1900	1900	1900	1900	1900	1900
Total Lost time (s)		4.0			4.0			4.0			4.0	
Lane Util. Factor		1.00			1.00			0.95			0.95	
Frpb, ped/bikes		0.97			0.96			0.98			0.99	
Flpb, ped/bikes		0.98			0.97			1.00			1.00	
Frt		0.98			0.94			0.98			0.99	
Flt Protected		0.98			0.99			1.00			1.00	
Satd. Flow (prot)		1693			1605			3400			3472	
Flt Permitted		0.83			0.87			0.91			0.88	
Satd. Flow (perm)		1437			1419			3088			3060	
Volume (vph)	70	80	31	60	60	90	31	501	80	50	584	30
Peak-hour factor, PHF	0.95	0.95	0.95	0.95	0.95	0.95	0.95	0.95	0.95	0.95	0.95	0.95
Adj. Flow (vph)	74	84	33	63	63	95	33	527	84	53	615	32
RTOR Reduction (vph)	0	17	0	0	60	0	0	27	0	0	8	0
Lane Group Flow (vph)	0	174	0	0	161	0	0	617	0	0	692	0
Confl. Peds. (#/hr)	100		100	100		100	100		100	100		100
Turn Type	Perm			Perm			Perm			Perm		
Protected Phases		4			8			2			6	
Permitted Phases	4			8			2			6		
Actuated Green, G (s)		15.0			15.0			22.0			22.0	
Effective Green, g (s)		15.0			15.0			22.0			22.0	
Actuated g/C Ratio		0.33			0.33			0.49			0.49	
Clearance Time (s)		4.0			4.0			4.0			4.0	
Lane Grp Cap (vph)		479			473			1510			1496	
v/s Ratio Prot												
v/s Ratio Perm		c0.12			0.11			0.20			c0.23	
v/c Ratio		0.36			0.34			0.41			0.46	
Uniform Delay, d1		11.4			11.3			7.3			7.6	
Progression Factor		1.00			1.00			1.00			1.00	
Incremental Delay, d2		2.1			2.0			0.8			1.0	
Delay (s)		13.5			13.2			8.2			8.6	
Level of Service		B			B			A			A	
Approach Delay (s)		13.5			13.2			8.2			8.6	
Approach LOS		B			B			A			A	

Intersection Summary			
HCM Average Control Delay	9.6	HCM Level of Service	A
HCM Volume to Capacity ratio	0.42		
Actuated Cycle Length (s)	45.0	Sum of lost time (s)	8.0
Intersection Capacity Utilization	63.9%	ICU Level of Service	B
Analysis Period (min)	15		
c Critical Lane Group			

Movement	EBL	EBT	EBR	WBL	WBT	WBR	NBL	NBT	NBR	SBL	SBT	SBR
Lane Configurations												
Ideal Flow (vphpl)	1900	1900	1900	1900	1900	1900	1900	1900	1900	1900	1900	1900
Total Lost time (s)		4.0			4.0			4.0			4.0	
Lane Util. Factor		1.00			1.00			0.95			0.91	
Frpb, ped/bikes		0.95			0.96			0.98			0.98	
Flpb, ped/bikes		0.97			0.98			1.00			1.00	
Frt		0.96			0.96			0.99			0.99	
Flt Protected		0.98			0.99			1.00			1.00	
Satd. Flow (prot)		1626			1650			3443			4931	
Flt Permitted		0.79			0.82			0.84			0.82	
Satd. Flow (perm)		1302			1369			2893			4042	
Volume (vph)	70	80	70	43	70	50	30	1033	62	70	1555	100
Peak-hour factor, PHF	0.95	0.95	0.95	0.95	0.95	0.95	0.95	0.95	0.95	0.95	0.95	0.95
Adj. Flow (vph)	74	84	74	45	74	53	32	1087	65	74	1637	105
RTOR Reduction (vph)	0	6	0	0	25	0	0	3	0	0	5	0
Lane Group Flow (vph)	0	226	0	0	147	0	0	1181	0	0	1811	0
Confl. Peds. (#/hr)	100		100	100		100	100		100	100		100
Turn Type	Perm			Perm			Perm			Perm		
Protected Phases		4			4			2			6	
Permitted Phases	4			4			2			6		
Actuated Green, G (s)		16.7			16.7			59.3			59.3	
Effective Green, g (s)		17.2			17.2			59.8			59.8	
Actuated g/C Ratio		0.20			0.20			0.70			0.70	
Clearance Time (s)		4.5			4.5			4.5			4.5	
Vehicle Extension (s)		2.0			2.0			2.0			2.0	
Lane Grp Cap (vph)		263			277			2035			2844	
v/s Ratio Prot												
v/s Ratio Perm		c0.17			0.11			0.41			c0.45	
v/c Ratio		0.86			0.53			0.58			0.64	
Uniform Delay, d1		32.7			30.3			6.3			6.8	
Progression Factor		1.00			1.00			0.79			1.00	
Incremental Delay, d2		23.1			1.0			1.0			1.1	
Delay (s)		55.9			31.3			6.0			7.9	
Level of Service		E			C			A			A	
Approach Delay (s)		55.9			31.3			6.0			7.9	
Approach LOS		E			C			A			A	

Intersection Summary			
HCM Average Control Delay	11.7	HCM Level of Service	B
HCM Volume to Capacity ratio	0.69		
Actuated Cycle Length (s)	85.0	Sum of lost time (s)	8.0
Intersection Capacity Utilization	103.4%	ICU Level of Service	G
Analysis Period (min)	15		
c Critical Lane Group			

Movement	EBL	EBT	EBR	WBL	WBT	WBR	NBL	NBT	NBR	SBL	SBT	SBR
Lane Configurations												
Ideal Flow (vphpl)	1900	1900	1900	1900	1900	1900	1900	1900	1900	1900	1900	1900
Total Lost time (s)	4.0	4.0		4.0	4.0		4.0	4.0		4.0	4.0	
Lane Util. Factor	1.00	0.95		1.00	0.95		1.00	1.00		1.00	1.00	
Frpb, ped/bikes	1.00	1.00		1.00	0.99		1.00	0.99		1.00	1.00	
Flpb, ped/bikes	0.99	1.00		0.99	1.00		1.00	1.00		0.98	1.00	
Frt	1.00	0.97		1.00	0.99		1.00	0.98		1.00	0.99	
Flt Protected	0.95	1.00		0.95	1.00		0.95	1.00		0.95	1.00	
Satd. Flow (prot)	1748	3432		1759	3463		1767	1813		1736	1841	
Flt Permitted	0.17	1.00		0.37	1.00		0.44	1.00		0.59	1.00	
Satd. Flow (perm)	320	3432		676	3463		810	1813		1086	1841	
Volume (vph)	30	379	80	73	687	74	90	201	33	83	400	30
Peak-hour factor, PHF	0.95	0.95	0.95	0.95	0.95	0.95	0.95	0.95	0.95	0.95	0.95	0.95
Adj. Flow (vph)	32	399	84	77	723	78	95	212	35	87	421	32
RTOR Reduction (vph)	0	22	0	0	10	0	0	7	0	0	3	0
Lane Group Flow (vph)	32	461	0	77	791	0	95	240	0	87	450	0
Confl. Peds. (#/hr)	30		12	12		30	6		54	54		6
Turn Type	Perm			Perm			Perm			Perm		
Protected Phases		4			8			2			6	
Permitted Phases	4			8			2			6		
Actuated Green, G (s)	24.0	24.0		24.0	24.0		49.5	49.5		49.5	49.5	
Effective Green, g (s)	23.0	23.0		23.0	23.0		49.0	49.0		49.0	49.0	
Actuated g/C Ratio	0.29	0.29		0.29	0.29		0.61	0.61		0.61	0.61	
Clearance Time (s)	3.0	3.0		3.0	3.0		3.5	3.5		3.5	3.5	
Lane Grp Cap (vph)	92	987		194	996		496	1110		665	1128	
v/s Ratio Prot		0.13			c0.23			0.13			c0.24	
v/s Ratio Perm	0.10			0.11			0.12			0.08		
v/c Ratio	0.35	0.47		0.40	0.79		0.19	0.22		0.13	0.40	
Uniform Delay, d1	22.6	23.5		22.9	26.3		6.8	6.9		6.5	7.9	
Progression Factor	1.00	1.00		0.87	0.91		1.00	1.00		1.00	1.00	
Incremental Delay, d2	10.1	1.6		5.5	6.0		0.9	0.4		0.4	1.1	
Delay (s)	32.7	25.0		25.5	30.0		7.7	7.4		6.9	9.0	
Level of Service	C	C		C	C		A	A		A	A	
Approach Delay (s)		25.5			29.6			7.4			8.7	
Approach LOS		C			C			A			A	

Intersection Summary			
HCM Average Control Delay	20.4	HCM Level of Service	C
HCM Volume to Capacity ratio	0.53		
Actuated Cycle Length (s)	80.0	Sum of lost time (s)	8.0
Intersection Capacity Utilization	83.3%	ICU Level of Service	E
Analysis Period (min)	15		
c Critical Lane Group			

Movement	EBL	EBT	EBR	WBL	WBT	WBR	NBL	NBT	NBR	SBL	SBT	SBR
Lane Configurations												
Ideal Flow (vphpl)	1900	1900	1900	1900	1900	1900	1900	1900	1900	1900	1900	1900
Total Lost time (s)	4.0	4.0		4.0	4.0			4.0			4.0	
Lane Util. Factor	1.00	0.95		1.00	0.95			0.95			0.95	
Frpb, ped/bikes	1.00	0.99		1.00	1.00			1.00			1.00	
Flpb, ped/bikes	1.00	1.00		0.98	1.00			1.00			1.00	
Frt	1.00	0.98		1.00	0.99			0.97			0.98	
Flt Protected	0.95	1.00		0.95	1.00			0.99			0.99	
Satd. Flow (prot)	1763	3427		1740	3513			3385			3421	
Flt Permitted	0.27	1.00		0.42	1.00			0.79			0.84	
Satd. Flow (perm)	510	3427		768	3513			2717			2899	
Volume (vph)	30	415	80	64	724	32	70	171	54	63	240	50
Peak-hour factor, PHF	0.95	0.95	0.95	0.95	0.95	0.95	0.95	0.95	0.95	0.95	0.95	0.95
Adj. Flow (vph)	32	437	84	67	762	34	74	180	57	66	253	53
RTOR Reduction (vph)	0	20	0	0	4	0	0	24	0	0	16	0
Lane Group Flow (vph)	32	501	0	67	792	0	0	287	0	0	356	0
Confl. Peds. (#/hr)	18		54	54		18	4		18	18		4
Turn Type	Perm			Perm			Perm			Perm		
Protected Phases		4			8			2			6	
Permitted Phases	4			8			2			6		
Actuated Green, G (s)	38.0	38.0		38.0	38.0			32.0			32.0	
Effective Green, g (s)	39.0	39.0		39.0	39.0			33.0			33.0	
Actuated g/C Ratio	0.49	0.49		0.49	0.49			0.41			0.41	
Clearance Time (s)	5.0	5.0		5.0	5.0			5.0			5.0	
Lane Grp Cap (vph)	249	1671		374	1713			1121			1196	
v/s Ratio Prot		0.15			c0.23							
v/s Ratio Perm	0.06			0.09				0.11			c0.12	
v/c Ratio	0.13	0.30		0.18	0.46			0.26			0.30	
Uniform Delay, d1	11.2	12.3		11.5	13.6			15.4			15.7	
Progression Factor	0.96	1.03		1.39	1.49			0.64			1.00	
Incremental Delay, d2	1.0	0.4		0.9	0.8			0.5			0.6	
Delay (s)	11.8	13.1		16.9	21.0			10.4			16.4	
Level of Service	B	B		B	C			B			B	
Approach Delay (s)		13.1			20.7			10.4			16.4	
Approach LOS		B			C			B			B	

Intersection Summary			
HCM Average Control Delay	16.4	HCM Level of Service	B
HCM Volume to Capacity ratio	0.39		
Actuated Cycle Length (s)	80.0	Sum of lost time (s)	8.0
Intersection Capacity Utilization	73.5%	ICU Level of Service	D
Analysis Period (min)	15		
c Critical Lane Group			

Movement	EBL	EBT	EBR	WBL	WBT	WBR	NBL	NBT	NBR	SBL	SBT	SBR
Lane Configurations												
Ideal Flow (vphpl)	1900	1900	1900	1900	1900	1900	1900	1900	1900	1900	1900	1900
Total Lost time (s)	4.0	4.0		4.0	4.0			4.0			4.0	
Lane Util. Factor	1.00	0.95		1.00	0.95			0.95			0.95	
Frpb, ped/bikes	1.00	0.99		1.00	0.99			0.99			1.00	
Flpb, ped/bikes	1.00	1.00		0.98	1.00			1.00			1.00	
Frt	1.00	0.98		1.00	0.98			0.97			0.99	
Flt Protected	0.95	1.00		0.95	1.00			0.99			0.99	
Satd. Flow (prot)	1764	3452		1735	3438			3381			3451	
Flt Permitted	0.24	1.00		0.42	1.00			0.86			0.76	
Satd. Flow (perm)	452	3452		774	3438			2939			2642	
Volume (vph)	40	442	61	105	721	134	39	238	77	119	346	30
Peak-hour factor, PHF	0.96	0.96	0.96	0.96	0.96	0.96	0.96	0.96	0.96	0.96	0.96	0.96
Adj. Flow (vph)	42	460	64	109	751	140	41	248	80	124	360	31
RTOR Reduction (vph)	0	14	0	0	19	0	0	32	0	0	6	0
Lane Group Flow (vph)	42	510	0	109	872	0	0	337	0	0	509	0
Confl. Peds. (#/hr)	13		71	71		13	22		22	22		22
Turn Type	Perm			Perm			Perm			Perm		
Protected Phases		4			8			2			6	
Permitted Phases	4			8			2			6		
Actuated Green, G (s)	41.5	41.5		41.5	41.5			32.0			32.0	
Effective Green, g (s)	41.0	41.0		41.0	41.0			31.0			31.0	
Actuated g/C Ratio	0.51	0.51		0.51	0.51			0.39			0.39	
Clearance Time (s)	3.5	3.5		3.5	3.5			3.0			3.0	
Lane Grp Cap (vph)	232	1769		397	1762			1139			1024	
v/s Ratio Prot		0.15			c0.25							
v/s Ratio Perm	0.09			0.14				0.11			c0.19	
v/c Ratio	0.18	0.29		0.27	0.49			0.30			0.50	
Uniform Delay, d1	10.5	11.2		11.1	12.7			17.0			18.6	
Progression Factor	1.28	1.31		1.00	1.00			0.65			1.00	
Incremental Delay, d2	1.7	0.4		1.7	1.0			0.6			1.7	
Delay (s)	15.1	15.0		12.8	13.7			11.6			20.3	
Level of Service	B	B		B	B			B			C	
Approach Delay (s)		15.0			13.6			11.6			20.3	
Approach LOS		B			B			B			C	

Intersection Summary			
HCM Average Control Delay	15.1	HCM Level of Service	B
HCM Volume to Capacity ratio	0.50		
Actuated Cycle Length (s)	80.0	Sum of lost time (s)	8.0
Intersection Capacity Utilization	102.5%	ICU Level of Service	G
Analysis Period (min)	15		
c Critical Lane Group			

Movement	EBT	EBR	WBL	WBT	NBL	NBR
Lane Configurations						
Ideal Flow (vphpl)	1900	1900	1900	1900	1900	1900
Total Lost time (s)	4.0		4.0	4.0	4.0	
Lane Util. Factor	0.95		1.00	0.95	1.00	
Frpb, ped/bikes	0.92		1.00	1.00	1.00	
Flpb, ped/bikes	1.00		1.00	1.00	1.00	
Frt	0.98		1.00	1.00	0.97	
Flt Protected	1.00		0.95	1.00	0.96	
Satd. Flow (prot)	3196		1770	3539	1734	
Flt Permitted	1.00		0.95	1.00	0.96	
Satd. Flow (perm)	3196		1770	3539	1734	
Volume (vph)	543	95	72	839	121	41
Peak-hour factor, PHF	0.95	0.95	0.95	0.95	0.95	0.95
Adj. Flow (vph)	572	100	76	883	127	43
RTOR Reduction (vph)	0	0	0	0	0	0
Lane Group Flow (vph)	672	0	76	883	170	0
Confl. Peds. (#/hr)		146	266			
Turn Type			Prot			
Protected Phases	4		3	8	2	
Permitted Phases						
Actuated Green, G (s)	52.8		7.8	64.6	12.4	
Effective Green, g (s)	52.8		7.8	64.6	12.4	
Actuated g/C Ratio	0.62		0.09	0.76	0.15	
Clearance Time (s)	4.0		4.0	4.0	4.0	
Vehicle Extension (s)	3.0		3.0	3.0	3.0	
Lane Grp Cap (vph)	1985		162	2690	253	
v/s Ratio Prot	0.21		c0.04	c0.25	c0.10	
v/s Ratio Perm						
v/c Ratio	0.34		0.47	0.33	0.67	
Uniform Delay, d1	7.7		36.6	3.3	34.4	
Progression Factor	1.00		1.03	0.73	0.71	
Incremental Delay, d2	0.5		1.6	0.2	6.7	
Delay (s)	8.2		39.2	2.6	31.0	
Level of Service	A		D	A	C	
Approach Delay (s)	8.2			5.5	31.0	
Approach LOS	A			A	C	

Intersection Summary			
HCM Average Control Delay	8.9	HCM Level of Service	A
HCM Volume to Capacity ratio	0.39		
Actuated Cycle Length (s)	85.0	Sum of lost time (s)	8.0
Intersection Capacity Utilization	42.3%	ICU Level of Service	A
Analysis Period (min)	15		
c Critical Lane Group			

Movement	EBL	EBT	EBR	WBL	WBT	WBR	NBL	NBT	NBR	SBL	SBT	SBR
Lane Configurations												
Ideal Flow (vphpl)	1900	1900	1900	1900	1900	1900	1900	1900	1900	1900	1900	1900
Total Lost time (s)	4.0	4.0		4.0	4.0		4.0	4.0		4.0	4.0	
Lane Util. Factor	1.00	0.95		1.00	0.95		1.00	0.95		1.00	0.95	
Frpb, ped/bikes	1.00	0.96		1.00	0.98		1.00	0.99		1.00	0.97	
Flpb, ped/bikes	0.95	1.00		0.92	1.00		1.00	1.00		1.00	1.00	
Frt	1.00	0.96		1.00	0.98		1.00	0.99		1.00	0.97	
Flt Protected	0.95	1.00		0.95	1.00		0.95	1.00		0.95	1.00	
Satd. Flow (prot)	1683	3268		1635	3407		1770	3451		1770	3339	
Flt Permitted	0.26	1.00		0.36	1.00		0.95	1.00		0.95	1.00	
Satd. Flow (perm)	453	3268		627	3407		1770	3451		1770	3339	
Volume (vph)	126	351	107	90	526	70	125	499	49	140	948	260
Peak-hour factor, PHF	0.95	0.95	0.95	0.95	0.95	0.95	0.95	0.95	0.95	0.95	0.95	0.95
Adj. Flow (vph)	133	369	113	95	554	74	132	525	52	147	998	274
RTOR Reduction (vph)	0	35	0	0	13	0	0	8	0	0	26	0
Lane Group Flow (vph)	133	447	0	95	615	0	132	569	0	147	1246	0
Confl. Peds. (#/hr)	72		137	137		72			58	58		92
Turn Type	Perm			Perm			Prot			Prot		
Protected Phases		4			8		5	2		1	6	
Permitted Phases	4			8								
Actuated Green, G (s)	24.4	24.4		24.4	24.4		10.3	36.6		10.5	36.8	
Effective Green, g (s)	24.9	24.9		24.9	24.9		10.8	37.1		11.0	37.3	
Actuated g/C Ratio	0.29	0.29		0.29	0.29		0.13	0.44		0.13	0.44	
Clearance Time (s)	4.5	4.5		4.5	4.5		4.5	4.5		4.5	4.5	
Vehicle Extension (s)	2.0	2.0		2.0	2.0		2.0	2.0		2.0	2.0	
Lane Grp Cap (vph)	133	957		184	998		225	1506		229	1465	
v/s Ratio Prot		0.14			0.18		0.07	0.16		c0.08	c0.37	
v/s Ratio Perm	c0.29			0.15								
v/c Ratio	1.00	0.47		0.52	0.62		0.59	0.38		0.64	0.85	
Uniform Delay, d1	30.1	24.6		25.0	25.9		35.0	16.2		35.1	21.4	
Progression Factor	0.74	0.68		1.00	1.00		0.73	1.51		1.28	0.72	
Incremental Delay, d2	76.5	0.1		1.0	0.8		2.5	0.7		3.4	4.9	
Delay (s)	98.7	16.8		26.1	26.7		28.0	25.1		48.6	20.2	
Level of Service	F	B		C	C		C	C		D	C	
Approach Delay (s)		34.5			26.6			25.6			23.2	
Approach LOS		C			C			C			C	

Intersection Summary			
HCM Average Control Delay	26.4	HCM Level of Service	C
HCM Volume to Capacity ratio	0.83		
Actuated Cycle Length (s)	85.0	Sum of lost time (s)	8.0
Intersection Capacity Utilization	80.3%	ICU Level of Service	D
Analysis Period (min)	15		

c Critical Lane Group

Movement	WBL	WBR	NBT	NBR	SBL	SBT
Lane Configurations						
Sign Control	Stop		Free			Free
Grade	0%		0%			0%
Volume (veh/h)	10	31	659	10	20	1119
Peak Hour Factor	0.95	0.95	0.95	0.95	0.95	0.95
Hourly flow rate (vph)	11	33	694	11	21	1178
Pedestrians	34		33			34
Lane Width (ft)	12.0		12.0			12.0
Walking Speed (ft/s)	4.0		4.0			4.0
Percent Blockage	3		3			3
Right turn flare (veh)						
Median type	None					
Median storage veh)						
Upstream signal (ft)			230			471
pX, platoon unblocked	0.87	0.95			0.95	
vC, conflicting volume	1397	420			738	
vC1, stage 1 conf vol						
vC2, stage 2 conf vol						
vCu, unblocked vol	1140	340			674	
tC, single (s)	6.8	6.9			4.1	
tC, 2 stage (s)						
tF (s)	3.5	3.3			2.2	
p0 queue free %	93	94			98	
cM capacity (veh/h)	156	589			844	

Direction, Lane #	WB 1	NB 1	NB 2	SB 1	SB 2	SB 3
Volume Total	43	462	242	21	589	589
Volume Left	11	0	0	21	0	0
Volume Right	33	0	11	0	0	0
cSH	351	1700	1700	844	1700	1700
Volume to Capacity	0.12	0.27	0.14	0.02	0.35	0.35
Queue Length 95th (ft)	10	0	0	2	0	0
Control Delay (s)	16.7	0.0	0.0	9.4	0.0	0.0
Lane LOS	C			A		
Approach Delay (s)	16.7	0.0		0.2		
Approach LOS	C					

Intersection Summary			
Average Delay	0.5		
Intersection Capacity Utilization	48.2%	ICU Level of Service	A
Analysis Period (min)	15		

Movement	EBL	EBT	EBR	WBL	WBT	WBR	NBL	NBT	NBR	SBL	SBT	SBR
Lane Configurations												
Ideal Flow (vphpl)	1900	1900	1900	1900	1900	1900	1900	1900	1900	1900	1900	1900
Total Lost time (s)		4.0		4.0	4.0			4.0		4.0	4.0	
Lane Util. Factor		0.91		1.00	0.95			1.00		1.00	1.00	
Frpb, ped/bikes		1.00		1.00	1.00			0.99		1.00	0.99	
Flpb, ped/bikes		1.00		0.99	1.00			1.00		0.98	1.00	
Frt		0.99		1.00	0.98			0.98		1.00	0.98	
Flt Protected		1.00		0.95	1.00			0.99		0.95	1.00	
Satd. Flow (prot)		4994		1758	3469			1774		1729	1815	
Flt Permitted		0.83		0.41	1.00			0.54		0.40	1.00	
Satd. Flow (perm)		4175		768	3469			975		732	1815	
Volume (vph)	50	469	40	61	624	81	70	203	60	200	313	50
Peak-hour factor, PHF	0.95	0.95	0.95	0.95	0.95	0.95	0.95	0.95	0.95	0.95	0.95	0.95
Adj. Flow (vph)	53	494	42	64	657	85	74	214	63	211	329	53
RTOR Reduction (vph)	0	10	0	0	12	0	0	9	0	0	7	0
Lane Group Flow (vph)	0	579	0	64	730	0	0	342	0	211	375	0
Confl. Peds. (#/hr)	24		18	18		24	24		48	48		24
Turn Type	Perm			Perm			Perm			Perm		
Protected Phases		4			8			2			6	
Permitted Phases	4			8			2			6		
Actuated Green, G (s)		51.0		51.0	51.0			24.0		24.0	24.0	
Effective Green, g (s)		52.0		52.0	52.0			25.0		25.0	25.0	
Actuated g/C Ratio		0.61		0.61	0.61			0.29		0.29	0.29	
Clearance Time (s)		5.0		5.0	5.0			5.0		5.0	5.0	
Lane Grp Cap (vph)		2554		470	2122			287		215	534	
v/s Ratio Prot					c0.21						0.21	
v/s Ratio Perm		0.14		0.08				c0.35		0.29		
v/c Ratio		0.23		0.14	0.34			1.19		0.98	0.70	
Uniform Delay, d1		7.4		7.0	8.1			30.0		29.8	26.7	
Progression Factor		1.00		1.00	1.00			1.00		1.00	1.00	
Incremental Delay, d2		0.2		0.6	0.4			115.2		56.8	7.5	
Delay (s)		7.6		7.6	8.6			145.2		86.5	34.2	
Level of Service		A		A	A			F		F	C	
Approach Delay (s)		7.6			8.5			145.2			52.8	
Approach LOS		A			A			F			D	

Intersection Summary			
HCM Average Control Delay	40.0	HCM Level of Service	D
HCM Volume to Capacity ratio	0.62		
Actuated Cycle Length (s)	85.0	Sum of lost time (s)	8.0
Intersection Capacity Utilization	100.7%	ICU Level of Service	G
Analysis Period (min)	15		
c Critical Lane Group			

Movement	EBL	EBT	EBR	WBL	WBT	WBR	NBL	NBT	NBR	SBL	SBT	SBR
Lane Configurations												
Ideal Flow (vphpl)	1900	1900	1900	1900	1900	1900	1900	1900	1900	1900	1900	1900
Total Lost time (s)		4.0			4.0		4.0	4.0		4.0	4.0	
Lane Util. Factor		0.91			0.91		1.00	1.00		1.00	1.00	
Frpb, ped/bikes		1.00			1.00		1.00	0.99		1.00	1.00	
Flpb, ped/bikes		1.00			1.00		0.99	1.00		0.99	1.00	
Frt		1.00			0.98		1.00	0.96		1.00	0.98	
Flt Protected		1.00			1.00		0.95	1.00		0.95	1.00	
Satd. Flow (prot)		5046			4979		1757	1770		1749	1830	
Flt Permitted		0.88			0.85		0.32	1.00		0.39	1.00	
Satd. Flow (perm)		4463			4224		595	1770		711	1830	
Volume (vph)	30	699	20	51	667	91	50	194	73	90	274	30
Peak-hour factor, PHF	0.95	0.95	0.95	0.95	0.95	0.95	0.95	0.95	0.95	0.95	0.95	0.95
Adj. Flow (vph)	32	736	21	54	702	96	53	204	77	95	288	32
RTOR Reduction (vph)	0	4	0	0	20	0	0	17	0	0	5	0
Lane Group Flow (vph)	0	785	0	0	832	0	53	264	0	95	315	0
Confl. Peds. (#/hr)			18	18			12		18	18		12
Turn Type	Perm			Perm			Perm			Perm		
Protected Phases		4			8			2			6	
Permitted Phases	4			8			2			6		
Actuated Green, G (s)		50.0			50.0		19.0	19.0		19.0	19.0	
Effective Green, g (s)		51.5			51.5		20.5	20.5		20.5	20.5	
Actuated g/C Ratio		0.64			0.64		0.26	0.26		0.26	0.26	
Clearance Time (s)		5.5			5.5		5.5	5.5		5.5	5.5	
Lane Grp Cap (vph)		2873			2719		152	454		182	469	
v/s Ratio Prot								0.15			c0.17	
v/s Ratio Perm		0.18			c0.20		0.09			0.13		
v/c Ratio		0.27			0.31		0.35	0.58		0.52	0.67	
Uniform Delay, d1		6.2			6.3		24.3	26.0		25.5	26.7	
Progression Factor		1.00			0.67		1.00	1.00		1.19	1.21	
Incremental Delay, d2		0.2			0.3		6.2	5.4		10.1	7.3	
Delay (s)		6.4			4.5		30.5	31.4		40.5	39.6	
Level of Service		A			A		C	C		D	D	
Approach Delay (s)		6.4			4.5			31.2			39.8	
Approach LOS		A			A			C			D	

Intersection Summary			
HCM Average Control Delay	15.0	HCM Level of Service	B
HCM Volume to Capacity ratio	0.41		
Actuated Cycle Length (s)	80.0	Sum of lost time (s)	8.0
Intersection Capacity Utilization	64.0%	ICU Level of Service	C
Analysis Period (min)	15		
c Critical Lane Group			

Movement	EBL	EBT	EBR	WBL	WBT	WBR	NBL	NBT	NBR	SBL	SBT	SBR
Lane Configurations												
Ideal Flow (vphpl)	1900	1900	1900	1900	1900	1900	1900	1900	1900	1900	1900	1900
Total Lost time (s)		4.0			4.0			4.0			4.0	
Lane Util. Factor		0.91			0.91			0.95			0.95	
Frpb, ped/bikes		1.00			1.00			0.99			1.00	
Flpb, ped/bikes		1.00			1.00			1.00			1.00	
Frt		0.99			0.98			0.97			0.99	
Flt Protected		1.00			1.00			0.99			0.99	
Satd. Flow (prot)		5026			4944			3399			3426	
Flt Permitted		0.82			0.83			0.84			0.78	
Satd. Flow (perm)		4152			4101			2857			2691	
Volume (vph)	54	779	40	58	744	136	30	164	44	127	311	44
Peak-hour factor, PHF	0.95	0.95	0.95	0.95	0.95	0.95	0.95	0.95	0.95	0.95	0.95	0.95
Adj. Flow (vph)	57	820	42	61	783	143	32	173	46	134	327	46
RTOR Reduction (vph)	0	6	0	0	29	0	0	24	0	0	10	0
Lane Group Flow (vph)	0	913	0	0	958	0	0	227	0	0	497	0
Confl. Peds. (#/hr)	17		19	19		17	12		16	16		12
Turn Type	Perm			Perm			Perm			Perm		
Protected Phases		4			8			2			6	
Permitted Phases	4			8			2			6		
Actuated Green, G (s)		50.0			50.0			19.0			19.0	
Effective Green, g (s)		51.5			51.5			20.5			20.5	
Actuated g/C Ratio		0.64			0.64			0.26			0.26	
Clearance Time (s)		5.5			5.5			5.5			5.5	
Lane Grp Cap (vph)		2673			2640			732			690	
v/s Ratio Prot												
v/s Ratio Perm		0.22			c0.23			0.08			c0.18	
v/c Ratio		0.34			0.36			0.31			0.72	
Uniform Delay, d1		6.5			6.6			24.0			27.1	
Progression Factor		0.75			1.00			1.00			0.48	
Incremental Delay, d2		0.3			0.4			1.1			6.2	
Delay (s)		5.2			7.0			25.1			19.3	
Level of Service		A			A			C			B	
Approach Delay (s)		5.2			7.0			25.1			19.3	
Approach LOS		A			A			C			B	

Intersection Summary			
HCM Average Control Delay	10.4	HCM Level of Service	B
HCM Volume to Capacity ratio	0.46		
Actuated Cycle Length (s)	80.0	Sum of lost time (s)	8.0
Intersection Capacity Utilization	100.3%	ICU Level of Service	G
Analysis Period (min)	15		
c Critical Lane Group			

Movement	EBL	EBT	EBR	WBL	WBT	WBR	NBL	NBT	NBR	SBL	SBT	SBR
Lane Configurations												
Ideal Flow (vphpl)	1900	1900	1900	1900	1900	1900	1900	1900	1900	1900	1900	1900
Total Lost time (s)		4.0			4.0			4.0			4.0	
Lane Util. Factor		0.91			0.91			1.00			1.00	
Frpb, ped/bikes		1.00			0.97			1.00			0.94	
Flpb, ped/bikes		1.00			1.00			1.00			1.00	
Frt		1.00			0.98			0.93			0.92	
Flt Protected		1.00			1.00			0.98			0.98	
Satd. Flow (prot)		5069			4868			1695			1589	
Flt Permitted		0.88			0.93			0.87			0.86	
Satd. Flow (perm)		4471			4517			1510			1404	
Volume (vph)	31	928	10	10	865	98	10	0	10	54	0	73
Peak-hour factor, PHF	0.95	0.95	0.95	0.95	0.95	0.95	0.95	0.95	0.95	0.95	0.95	0.95
Adj. Flow (vph)	33	977	11	11	911	103	11	0	11	57	0	77
RTOR Reduction (vph)	0	1	0	0	0	0	0	9	0	0	0	0
Lane Group Flow (vph)	0	1020	0	0	1025	0	0	13	0	0	134	0
Confl. Peds. (#/hr)						98						98
Turn Type	Perm			Perm			Perm			Perm		
Protected Phases		4			8			2			6	
Permitted Phases	4			8			2			6		
Actuated Green, G (s)		62.1			62.1			14.9			14.9	
Effective Green, g (s)		62.1			62.1			14.9			14.9	
Actuated g/C Ratio		0.73			0.73			0.18			0.18	
Clearance Time (s)		4.0			4.0			4.0			4.0	
Vehicle Extension (s)		3.0			3.0			3.0			3.0	
Lane Grp Cap (vph)		3266			3300			265			246	
v/s Ratio Prot												
v/s Ratio Perm		c0.23			0.23			0.01			c0.10	
v/c Ratio		0.31			0.31			0.05			0.54	
Uniform Delay, d1		4.0			4.0			29.2			32.0	
Progression Factor		1.00			1.55			1.00			0.98	
Incremental Delay, d2		0.3			0.2			0.1			2.3	
Delay (s)		4.2			6.4			29.2			33.6	
Level of Service		A			A			C			C	
Approach Delay (s)		4.2			6.4			29.2			33.6	
Approach LOS		A			A			C			C	

Intersection Summary			
HCM Average Control Delay	7.3	HCM Level of Service	A
HCM Volume to Capacity ratio	0.36		
Actuated Cycle Length (s)	85.0	Sum of lost time (s)	8.0
Intersection Capacity Utilization	71.2%	ICU Level of Service	C
Analysis Period (min)	15		
c Critical Lane Group			

Movement	EBL	EBT	EBR	WBL	WBT	WBR	NBL	NBT	NBR	SBL	SBT	SBR
Lane Configurations												
Ideal Flow (vphpl)	1900	1900	1900	1900	1900	1900	1900	1900	1900	1900	1900	1900
Total Lost time (s)		4.0			4.0		4.0	4.0		4.0	4.0	
Lane Util. Factor		0.91			0.91		1.00	0.95		1.00	0.95	
Frpb, ped/bikes		1.00			0.99		1.00	0.99		1.00	0.99	
Flpb, ped/bikes		1.00			1.00		0.99	1.00		0.98	1.00	
Frt		0.98			0.97		1.00	0.97		1.00	0.97	
Flt Protected		0.99			0.99		0.95	1.00		0.95	1.00	
Satd. Flow (prot)		4954			4866		1760	3415		1741	3408	
Flt Permitted		0.66			0.68		0.23	1.00		0.46	1.00	
Satd. Flow (perm)		3272			3323		431	3415		852	3408	
Volume (vph)	127	758	107	110	717	189	70	355	80	284	709	176
Peak-hour factor, PHF	0.95	0.95	0.95	0.95	0.95	0.95	0.95	0.95	0.95	0.95	0.95	0.95
Adj. Flow (vph)	134	798	113	116	755	199	74	374	84	299	746	185
RTOR Reduction (vph)	0	21	0	0	67	0	0	15	0	0	17	0
Lane Group Flow (vph)	0	1024	0	0	1003	0	74	443	0	299	914	0
Confl. Peds. (#/hr)	40		9			40	25		31	31		25
Turn Type	Perm			pm+pt			Perm			Perm		
Protected Phases		4		3	8			2			6	
Permitted Phases	4			8			2			6		
Actuated Green, G (s)		30.4			30.4		44.1	44.1		44.1	44.1	
Effective Green, g (s)		31.9			31.9		45.1	45.1		45.1	45.1	
Actuated g/C Ratio		0.38			0.38		0.53	0.53		0.53	0.53	
Clearance Time (s)		5.5			5.5		5.0	5.0		5.0	5.0	
Vehicle Extension (s)		2.0			2.0		2.0	2.0		2.0	2.0	
Lane Grp Cap (vph)		1228			1247		229	1812		452	1808	
v/s Ratio Prot								0.13			0.27	
v/s Ratio Perm		c0.31			0.30		0.17			c0.35		
v/c Ratio		0.83			0.80		0.32	0.24		0.66	0.51	
Uniform Delay, d1		24.1			23.8		11.3	10.8		14.4	12.8	
Progression Factor		1.42			1.00		1.41	1.38		1.12	1.16	
Incremental Delay, d2		4.6			3.6		3.6	0.3		6.6	0.9	
Delay (s)		39.0			27.4		19.5	15.1		22.7	15.7	
Level of Service		D			C		B	B		C	B	
Approach Delay (s)		39.0			27.4			15.7			17.4	
Approach LOS		D			C			B			B	

Intersection Summary			
HCM Average Control Delay	25.8	HCM Level of Service	C
HCM Volume to Capacity ratio	0.73		
Actuated Cycle Length (s)	85.0	Sum of lost time (s)	8.0
Intersection Capacity Utilization	90.5%	ICU Level of Service	E
Analysis Period (min)	15		

c Critical Lane Group

Movement	EBL	EBT	EBR	WBL	WBT	WBR	NBL	NBT	NBR	SBL	SBT	SBR
Lane Configurations												
Ideal Flow (vphpl)	1900	1900	1900	1900	1900	1900	1900	1900	1900	1900	1900	1900
Total Lost time (s)		4.0			4.0			4.0	4.0		4.0	
Lane Util. Factor		0.91			0.91			1.00	1.00		1.00	
Frpb, ped/bikes		1.00			0.99			1.00	0.88		0.97	
Flpb, ped/bikes		1.00			1.00			0.97	1.00		0.95	
Frt		1.00			0.99			1.00	0.85		0.96	
Flt Protected		1.00			1.00			0.98	1.00		0.97	
Satd. Flow (prot)		5040			4983			1770	1395		1606	
Flt Permitted		0.88			0.88			0.88	1.00		0.82	
Satd. Flow (perm)		4451			4372			1585	1395		1357	
Volume (vph)	30	1089	33	30	984	80	22	33	20	80	30	40
Peak-hour factor, PHF	0.95	0.95	0.95	0.95	0.95	0.95	0.95	0.95	0.95	0.95	0.95	0.95
Adj. Flow (vph)	32	1146	35	32	1036	84	23	35	21	84	32	42
RTOR Reduction (vph)	0	4	0	0	11	0	0	0	15	0	16	0
Lane Group Flow (vph)	0	1209	0	0	1141	0	0	58	6	0	142	0
Confl. Peds. (#/hr)	100		100	100		100	100		100	100		100
Turn Type	Perm			Perm			Perm		Perm	Perm		
Protected Phases		4			8			2			6	
Permitted Phases	4			8			2		2	6		
Actuated Green, G (s)		48.0			48.0			23.0	23.0		23.0	
Effective Green, g (s)		48.5			48.5			23.5	23.5		23.5	
Actuated g/C Ratio		0.61			0.61			0.29	0.29		0.29	
Clearance Time (s)		4.5			4.5			4.5	4.5		4.5	
Lane Grp Cap (vph)		2698			2651			466	410		399	
v/s Ratio Prot												
v/s Ratio Perm		c0.27			0.26			0.04	0.00		c0.10	
v/c Ratio		0.45			0.43			0.12	0.02		0.36	
Uniform Delay, d1		8.5			8.4			20.7	20.0		22.3	
Progression Factor		1.00			1.00			1.00	1.00		1.00	
Incremental Delay, d2		0.5			0.5			0.5	0.1		2.5	
Delay (s)		9.1			8.9			21.3	20.1		24.7	
Level of Service		A			A			C	C		C	
Approach Delay (s)		9.1			8.9			21.0			24.7	
Approach LOS		A			A			C			C	

Intersection Summary			
HCM Average Control Delay	10.3	HCM Level of Service	B
HCM Volume to Capacity ratio	0.42		
Actuated Cycle Length (s)	80.0	Sum of lost time (s)	8.0
Intersection Capacity Utilization	81.7%	ICU Level of Service	D
Analysis Period (min)	15		

c Critical Lane Group

Movement	EBL	EBT	EBR	WBL	WBT	WBR	NBL	NBT	NBR	SBL	SBT	SBR
Lane Configurations												
Ideal Flow (vphpl)	1900	1900	1900	1900	1900	1900	1900	1900	1900	1900	1900	1900
Total Lost time (s)	4.0	4.0		4.0	4.0		4.0	4.0	4.0	4.0	4.0	4.0
Lane Util. Factor	1.00	0.91		1.00	0.91		1.00	0.95	1.00	1.00	*1.00	1.00
Frpb, ped/bikes	1.00	0.99		1.00	0.99		1.00	1.00	0.96	1.00	1.00	0.96
Flpb, ped/bikes	1.00	1.00		1.00	1.00		1.00	1.00	1.00	1.00	1.00	1.00
Frt	1.00	0.98		1.00	0.96		1.00	1.00	0.85	1.00	1.00	0.85
Flt Protected	0.95	1.00		0.95	1.00		0.95	1.00	1.00	0.95	1.00	1.00
Satd. Flow (prot)	1770	4908		1770	4832		1770	3539	1513	1770	3725	1523
Flt Permitted	0.95	1.00		0.95	1.00		0.95	1.00	1.00	0.95	1.00	1.00
Satd. Flow (perm)	1770	4908		1770	4832		1770	3539	1513	1770	3725	1523
Volume (vph)	160	897	141	150	754	260	110	261	50	400	1221	150
Peak-hour factor, PHF	0.95	0.95	0.95	0.95	0.95	0.95	0.95	0.95	0.95	0.95	0.95	0.95
Adj. Flow (vph)	168	944	148	158	794	274	116	275	53	421	1285	158
RTOR Reduction (vph)	0	17	0	0	52	0	0	0	31	0	0	32
Lane Group Flow (vph)	168	1075	0	158	1016	0	116	275	22	421	1285	126
Confl. Peds. (#/hr)			66			23			38			26
Turn Type	Prot			Prot			Prot		pm+ov	Prot		pm+ov
Protected Phases	7	4		3	8		5	2	3	1	6	7
Permitted Phases									2			6
Actuated Green, G (s)	12.0	33.4		13.6	35.0		10.4	28.0	41.6	29.0	46.6	58.6
Effective Green, g (s)	11.0	34.4		12.6	36.0		9.4	29.0	41.6	28.0	47.6	58.6
Actuated g/C Ratio	0.09	0.29		0.10	0.30		0.08	0.24	0.35	0.23	0.40	0.49
Clearance Time (s)	3.0	5.0		3.0	5.0		3.0	5.0	3.0	3.0	5.0	3.0
Vehicle Extension (s)	2.0	2.0		2.0	2.0		2.0	2.0	2.0	2.0	2.0	2.0
Lane Grp Cap (vph)	162	1407		186	1450		139	855	575	413	1478	794
v/s Ratio Prot	c0.09	c0.22		0.09	0.21		0.07	0.08	0.00	c0.24	c0.34	0.01
v/s Ratio Perm									0.01			0.07
v/c Ratio	1.04	0.76		0.85	0.70		0.83	0.32	0.04	1.02	0.87	0.16
Uniform Delay, d1	54.5	39.1		52.8	37.2		54.5	37.4	26.0	46.0	33.3	17.0
Progression Factor	1.00	1.00		1.00	1.00		1.00	1.00	1.00	1.00	1.00	1.00
Incremental Delay, d2	80.8	4.0		27.6	2.8		31.8	1.0	0.0	49.3	7.2	0.0
Delay (s)	135.3	43.1		80.4	40.1		86.3	38.4	26.0	95.3	40.6	17.1
Level of Service	F	D		F	D		F	D	C	F	D	B
Approach Delay (s)		55.4			45.3			49.4			50.9	
Approach LOS		E			D			D			D	

Intersection Summary			
HCM Average Control Delay	50.5	HCM Level of Service	D
HCM Volume to Capacity ratio	0.87		
Actuated Cycle Length (s)	120.0	Sum of lost time (s)	12.0
Intersection Capacity Utilization	87.0%	ICU Level of Service	E
Analysis Period (min)	15		

c Critical Lane Group

Movement	EBL	EBT	EBR	WBL	WBT	WBR	NBL	NBT	NBR	SBL	SBT	SBR
Lane Configurations												
Ideal Flow (vphpl)	1900	1900	1900	1900	1900	1900	1900	1900	1900	1900	1900	1900
Total Lost time (s)		4.0			4.0		4.0	4.0		4.0	4.0	
Lane Util. Factor		1.00			1.00		1.00	0.95		1.00	0.95	
Frpb, ped/bikes		0.93			0.96		1.00	0.99		1.00	0.99	
Flpb, ped/bikes		0.97			0.96		0.94	1.00		0.93	1.00	
Frt		0.95			0.95		1.00	0.99		1.00	0.99	
Flt Protected		0.98			0.99		0.95	1.00		0.95	1.00	
Satd. Flow (prot)		1580			1606		1664	3456		1639	3468	
Flt Permitted		0.72			0.86		0.37	1.00		0.42	1.00	
Satd. Flow (perm)		1164			1395		640	3456		731	3468	
Volume (vph)	42	30	40	50	60	64	60	529	40	32	652	42
Peak-hour factor, PHF	0.95	0.95	0.95	0.95	0.95	0.95	0.95	0.95	0.95	0.95	0.95	0.95
Adj. Flow (vph)	44	32	42	53	63	67	63	557	42	34	686	44
RTOR Reduction (vph)	0	28	0	0	29	0	0	4	0	0	4	0
Lane Group Flow (vph)	0	90	0	0	154	0	63	595	0	34	726	0
Confl. Peds. (#/hr)	100		100	100		100	100		100	100		100
Turn Type	Perm			Perm			Perm			Perm		
Protected Phases		4			4			2			6	
Permitted Phases	4			4			2			6		
Actuated Green, G (s)		12.7			12.7		65.3	65.3		65.3	65.3	
Effective Green, g (s)		12.2			12.2		64.8	64.8		64.8	64.8	
Actuated g/C Ratio		0.14			0.14		0.76	0.76		0.76	0.76	
Clearance Time (s)		3.5			3.5		3.5	3.5		3.5	3.5	
Vehicle Extension (s)		2.0			2.0		2.0	2.0		2.0	2.0	
Lane Grp Cap (vph)		167			200		488	2635		557	2644	
v/s Ratio Prot								0.17			c0.21	
v/s Ratio Perm		0.08			c0.11		0.10			0.05		
v/c Ratio		0.54			0.77		0.13	0.23		0.06	0.27	
Uniform Delay, d1		33.8			35.0		2.7	2.9		2.5	3.0	
Progression Factor		1.00			1.00		1.00	1.00		0.55	0.49	
Incremental Delay, d2		1.7			14.7		0.5	0.2		0.2	0.2	
Delay (s)		35.4			49.8		3.2	3.1		1.5	1.7	
Level of Service		D			D		A	A		A	A	
Approach Delay (s)		35.4			49.8			3.1			1.7	
Approach LOS		D			D			A			A	

Intersection Summary			
HCM Average Control Delay	9.6	HCM Level of Service	A
HCM Volume to Capacity ratio	0.35		
Actuated Cycle Length (s)	85.0	Sum of lost time (s)	8.0
Intersection Capacity Utilization	54.8%	ICU Level of Service	A
Analysis Period (min)	15		

c Critical Lane Group

Movement	EBL	EBT	EBR	WBL	WBT	WBR	NBL	NBT	NBR	SBL	SBT	SBR
Lane Configurations												
Ideal Flow (vphpl)	1900	1900	1900	1900	1900	1900	1900	1900	1900	1900	1900	1900
Total Lost time (s)	4.0	4.0		4.0	4.0		4.0	4.0		4.0	4.0	
Lane Util. Factor	1.00	0.95		1.00	0.95		1.00	0.95		1.00	0.95	
Frpb, ped/bikes	1.00	0.97		1.00	0.95		1.00	0.99		1.00	0.95	
Flpb, ped/bikes	1.00	1.00		1.00	1.00		0.96	1.00		0.95	1.00	
Frt	1.00	0.97		1.00	0.96		1.00	0.98		1.00	0.96	
Flt Protected	0.95	1.00		0.95	1.00		0.95	1.00		0.95	1.00	
Satd. Flow (prot)	1770	3347		1770	3217		1692	3445		1677	3221	
Flt Permitted	0.95	1.00		0.95	1.00		0.27	1.00		0.49	1.00	
Satd. Flow (perm)	1770	3347		1770	3217		484	3445		864	3221	
Volume (vph)	260	400	100	70	370	129	70	341	40	92	530	210
Peak-hour factor, PHF	0.95	0.95	0.95	0.95	0.95	0.95	0.95	0.95	0.95	0.95	0.95	0.95
Adj. Flow (vph)	274	421	105	74	389	136	74	359	42	97	558	221
RTOR Reduction (vph)	0	24	0	0	45	0	0	9	0	0	42	0
Lane Group Flow (vph)	274	502	0	74	480	0	74	392	0	97	737	0
Confl. Peds. (#/hr)			100			100	100		100	100		100
Turn Type	Prot			Prot			Perm			Perm		
Protected Phases	7	4		3	8			2			6	
Permitted Phases							2			6		
Actuated Green, G (s)	16.1	26.6		6.8	17.3		38.1	38.1		38.1	38.1	
Effective Green, g (s)	16.6	26.1		7.3	16.8		39.6	39.6		39.6	39.6	
Actuated g/C Ratio	0.20	0.31		0.09	0.20		0.47	0.47		0.47	0.47	
Clearance Time (s)	4.5	3.5		4.5	3.5		5.5	5.5		5.5	5.5	
Vehicle Extension (s)	2.0	2.0		2.0	2.0		2.0	2.0		2.0	2.0	
Lane Grp Cap (vph)	346	1028		152	636		225	1605		403	1501	
v/s Ratio Prot	c0.15	0.15		0.04	c0.15			0.11			c0.23	
v/s Ratio Perm							0.15			0.11		
v/c Ratio	0.79	0.49		0.49	0.75		0.33	0.24		0.24	0.49	
Uniform Delay, d1	32.6	24.0		37.1	32.2		14.3	13.7		13.7	15.7	
Progression Factor	1.00	1.00		1.00	1.00		1.00	1.00		1.00	1.00	
Incremental Delay, d2	11.0	0.1		0.9	4.5		3.9	0.4		1.4	1.2	
Delay (s)	43.5	24.1		38.0	36.7		18.2	14.0		15.1	16.9	
Level of Service	D	C		D	D		B	B		B	B	
Approach Delay (s)		30.8			36.8			14.7			16.7	
Approach LOS		C			D			B			B	

Intersection Summary			
HCM Average Control Delay	24.8	HCM Level of Service	C
HCM Volume to Capacity ratio	0.62		
Actuated Cycle Length (s)	85.0	Sum of lost time (s)	12.0
Intersection Capacity Utilization	73.6%	ICU Level of Service	D
Analysis Period (min)	15		

c Critical Lane Group

Movement	EBL	EBR	NBL	NBT	SBT	SBR
Lane Configurations						
Ideal Flow (vphpl)	1900	1900	1900	1900	1900	1900
Total Lost time (s)	4.0		4.0	4.0	4.0	
Lane Util. Factor	1.00		1.00	0.95	0.95	
Frt	0.91		1.00	1.00	0.99	
Flt Protected	0.98		0.95	1.00	1.00	
Satd. Flow (prot)	1670		1770	3539	3503	
Flt Permitted	0.98		0.95	1.00	1.00	
Satd. Flow (perm)	1670		1770	3539	3503	
Volume (vph)	67	126	58	635	1067	78
Peak-hour factor, PHF	0.95	0.95	0.95	0.95	0.95	0.95
Adj. Flow (vph)	71	133	61	668	1123	82
RTOR Reduction (vph)	94	0	0	0	3	0
Lane Group Flow (vph)	110	0	61	668	1202	0
Turn Type			Prot			
Protected Phases	2		3	8	4	
Permitted Phases						
Actuated Green, G (s)	10.5		5.3	66.5	57.2	
Effective Green, g (s)	10.5		5.3	66.5	57.2	
Actuated g/C Ratio	0.12		0.06	0.78	0.67	
Clearance Time (s)	4.0		4.0	4.0	4.0	
Vehicle Extension (s)	3.0		3.0	3.0	3.0	
Lane Grp Cap (vph)	206		110	2769	2357	
v/s Ratio Prot	c0.07		c0.03	0.19	c0.34	
v/s Ratio Perm						
v/c Ratio	0.54		0.55	0.24	0.51	
Uniform Delay, d1	35.0		38.7	2.5	6.9	
Progression Factor	1.00		1.07	0.54	1.10	
Incremental Delay, d2	2.7		5.3	0.2	0.6	
Delay (s)	37.6		46.8	1.5	8.3	
Level of Service	D		D	A	A	
Approach Delay (s)	37.6			5.3	8.3	
Approach LOS	D			A	A	

Intersection Summary			
HCM Average Control Delay	10.1	HCM Level of Service	B
HCM Volume to Capacity ratio	0.52		
Actuated Cycle Length (s)	85.0	Sum of lost time (s)	12.0
Intersection Capacity Utilization	56.8%	ICU Level of Service	B
Analysis Period (min)	15		

c Critical Lane Group

Movement	EBL	EBT	EBR	WBL	WBT	WBR	NBL	NBT	NBR	SBL	SBT	SBR
Lane Configurations												
Ideal Flow (vphpl)	1900	1900	1900	1900	1900	1900	1900	1900	1900	1900	1900	1900
Lane Width	12	12	12	12	12	12	16	16	16	16	16	16
Total Lost time (s)	4.0	4.0		4.0	4.0		2.0	2.0		2.0	2.0	
Lane Util. Factor	1.00	0.91		1.00	0.91		1.00	1.00		1.00	1.00	
Frpb, ped/bikes	1.00	0.99		1.00	1.00		1.00	0.98		1.00	0.98	
Flpb, ped/bikes	1.00	1.00		1.00	1.00		1.00	1.00		0.98	1.00	
Frt	1.00	0.98		1.00	0.98		1.00	0.96		1.00	0.93	
Flt Protected	0.95	1.00		0.95	1.00		0.95	1.00		0.95	1.00	
Satd. Flow (prot)	1770	4924		1770	4968		2006	1995		1958	1918	
Flt Permitted	0.95	1.00		0.95	1.00		0.12	1.00		0.55	1.00	
Satd. Flow (perm)	1770	4924		1770	4968		261	1995		1131	1918	
Volume (vph)	340	1232	181	90	1020	150	170	247	90	140	279	270
Peak-hour factor, PHF	0.95	0.95	0.95	0.95	0.95	0.95	0.95	0.95	0.95	0.95	0.95	0.95
Adj. Flow (vph)	358	1297	191	95	1074	158	179	260	95	147	294	284
RTOR Reduction (vph)	0	18	0	0	19	0	0	14	0	0	35	0
Lane Group Flow (vph)	358	1470	0	95	1213	0	179	341	0	147	543	0
Confl. Peds. (#/hr)			32	32		4	12		24	24		12
Parking (#/hr)												0
Turn Type	Prot			Prot			pm+pt			Perm		
Protected Phases	7	4		3	8		5	2			6	
Permitted Phases							2			6		
Actuated Green, G (s)	20.0	38.8		7.8	26.6		42.9	42.9		29.9	29.9	
Effective Green, g (s)	20.0	38.8		7.8	26.6		43.4	43.4		30.4	30.4	
Actuated g/C Ratio	0.20	0.39		0.08	0.27		0.43	0.43		0.30	0.30	
Clearance Time (s)	4.0	4.0		4.0	4.0		4.0	2.5		2.5	2.5	
Vehicle Extension (s)	3.0	3.0		3.0	3.0		3.0	3.0		3.0	3.0	
Lane Grp Cap (vph)	354	1911		138	1321		305	866		344	583	
v/s Ratio Prot	c0.20	0.30		0.05	c0.24		c0.06	0.17			c0.28	
v/s Ratio Perm							0.19			0.13		
v/c Ratio	1.01	0.77		0.69	0.92		0.59	0.39		0.43	0.93	
Uniform Delay, d1	40.0	26.7		44.9	35.6		43.5	19.3		27.8	33.8	
Progression Factor	1.00	1.00		1.00	1.00		1.00	1.00		1.00	1.00	
Incremental Delay, d2	50.7	3.0		13.4	11.6		2.9	0.3		0.9	21.7	
Delay (s)	90.7	29.7		58.3	47.3		46.4	19.6		28.7	55.5	
Level of Service	F	C		E	D		D	B		C	E	
Approach Delay (s)		41.6			48.1			28.6			50.0	
Approach LOS		D			D			C			D	

Intersection Summary			
HCM Average Control Delay	43.3	HCM Level of Service	D
HCM Volume to Capacity ratio	0.89		
Actuated Cycle Length (s)	100.0	Sum of lost time (s)	12.0
Intersection Capacity Utilization	96.5%	ICU Level of Service	F
Analysis Period (min)	15		

c Critical Lane Group

Movement	EBL	EBT	EBR	WBL	WBT	WBR	NBL	NBT	NBR	SBL	SBT	SBR
Lane Configurations												
Ideal Flow (vphpl)	1900	1900	1900	1900	1900	1900	1900	1900	1900	1900	1900	1900
Total Lost time (s)		4.0		4.0	4.0			4.0		4.0	4.0	
Lane Util. Factor		1.00		0.95	0.95			0.95		1.00	0.95	
Frpb, ped/bikes		1.00		1.00	0.97			0.98		1.00	0.95	
Flpb, ped/bikes		0.99		1.00	1.00			1.00		1.00	1.00	
Frt		0.93		1.00	0.92			0.96		1.00	0.95	
Flt Protected		0.99		0.95	1.00			1.00		0.95	1.00	
Satd. Flow (prot)		1705		1681	1578			3316		1770	3193	
Flt Permitted		0.36		0.73	1.00			0.94		0.95	1.00	
Satd. Flow (perm)		619		1290	1578			3128		1770	3193	
Volume (vph)	10	10	20	116	110	120	10	1133	485	120	818	410
Peak-hour factor, PHF	0.95	0.95	0.95	0.95	0.95	0.95	0.95	0.95	0.95	0.95	0.95	0.95
Adj. Flow (vph)	11	11	21	122	116	126	11	1193	511	126	861	432
RTOR Reduction (vph)	0	20	0	0	43	0	0	39	0	0	50	0
Lane Group Flow (vph)	0	23	0	122	199	0	0	1676	0	126	1243	0
Confl. Peds. (#/hr)	36					36	48		16	16		48
Turn Type	Perm			Perm			Perm			Prot		
Protected Phases		7			8			2		1	6	
Permitted Phases	7			8			2					
Actuated Green, G (s)		6.5		16.0	16.0			48.7		10.8	64.0	
Effective Green, g (s)		7.0		16.5	16.5			49.2		11.3	64.5	
Actuated g/C Ratio		0.07		0.16	0.16			0.49		0.11	0.64	
Clearance Time (s)		4.5		4.5	4.5			4.5		4.5	4.5	
Vehicle Extension (s)		2.0		2.0	2.0			2.0		2.0	2.0	
Lane Grp Cap (vph)		43		213	260			1539		200	2059	
v/s Ratio Prot										0.07	c0.39	
v/s Ratio Perm		c0.04		0.09	0.13			c0.54				
v/c Ratio		0.55		0.57	0.77			1.09		0.63	0.60	
Uniform Delay, d1		45.0		38.5	39.9			25.4		42.4	10.3	
Progression Factor		1.00		1.00	1.00			0.60		1.00	1.00	
Incremental Delay, d2		7.4		2.3	11.5			41.4		4.7	1.3	
Delay (s)		52.3		40.8	51.4			56.6		47.0	11.6	
Level of Service		D		D	D			E		D	B	
Approach Delay (s)		52.3			47.9			56.6			14.8	
Approach LOS		D			D			E			B	

Intersection Summary			
HCM Average Control Delay	38.9	HCM Level of Service	D
HCM Volume to Capacity ratio	0.93		
Actuated Cycle Length (s)	100.0	Sum of lost time (s)	16.0
Intersection Capacity Utilization	111.6%	ICU Level of Service	H
Analysis Period (min)	15		

c Critical Lane Group

Movement	EBL	EBT	EBR	WBL	WBT	WBR	NBL	NBT	NBR	SBL	SBT	SBR
Lane Configurations												
Ideal Flow (vphpl)	1900	1900	1900	1900	1900	1900	1900	1900	1900	1900	1900	1900
Total Lost time (s)	4.0	4.0		4.0	4.0		4.0	4.0		4.0	4.0	
Lane Util. Factor	0.97	0.95		1.00	0.95		1.00	0.95		1.00	0.95	
Frpb, ped/bikes	1.00	0.99		1.00	0.99		1.00	0.97		1.00	0.98	
Flpb, ped/bikes	1.00	1.00		1.00	1.00		1.00	1.00		1.00	1.00	
Frt	1.00	0.99		1.00	0.95		1.00	0.97		1.00	0.99	
Flt Protected	0.95	1.00		0.95	1.00		0.95	1.00		0.95	1.00	
Satd. Flow (prot)	3433	3456		1770	3308		1770	3322		1770	3414	
Flt Permitted	0.95	1.00		0.95	1.00		0.95	1.00		0.95	1.00	
Satd. Flow (perm)	3433	3456		1770	3308		1770	3322		1770	3414	
Volume (vph)	460	880	82	120	510	290	90	898	260	220	684	60
Peak-hour factor, PHF	0.95	0.95	0.95	0.95	0.95	0.95	0.95	0.95	0.95	0.95	0.95	0.95
Adj. Flow (vph)	484	926	86	126	537	305	95	945	274	232	720	63
RTOR Reduction (vph)	0	7	0	0	79	0	0	27	0	0	7	0
Lane Group Flow (vph)	484	1005	0	126	763	0	95	1192	0	232	776	0
Confl. Peds. (#/hr)	15		48	48		15	123		48	48		123
Turn Type	Prot			Prot			Prot			Prot		
Protected Phases	7	4		3	8		5	2		1	6	
Permitted Phases												
Actuated Green, G (s)	15.7	28.3		10.0	22.6		5.0	32.7		12.0	39.7	
Effective Green, g (s)	15.2	29.3		9.5	23.6		4.5	33.7		11.5	40.7	
Actuated g/C Ratio	0.15	0.29		0.10	0.24		0.04	0.34		0.12	0.41	
Clearance Time (s)	3.5	5.0		3.5	5.0		3.5	5.0		3.5	5.0	
Vehicle Extension (s)	2.0	2.0		2.0	2.0		2.0	2.0		2.0	2.0	
Lane Grp Cap (vph)	522	1013		168	781		80	1120		204	1389	
v/s Ratio Prot	c0.14	c0.29		0.07	0.23		0.05	c0.36		c0.13	0.23	
v/s Ratio Perm												
v/c Ratio	0.93	0.99		0.75	0.98		1.19	1.06		1.14	0.56	
Uniform Delay, d1	41.9	35.2		44.1	37.9		47.8	33.1		44.2	22.8	
Progression Factor	1.00	1.00		1.00	1.00		1.00	1.00		1.22	0.74	
Incremental Delay, d2	22.3	26.2		15.3	26.1		159.7	45.9		98.6	1.3	
Delay (s)	64.2	61.4		59.4	64.0		207.4	79.0		152.5	18.2	
Level of Service	E	E		E	E		F	E		F	B	
Approach Delay (s)		62.3			63.4			88.3			48.9	
Approach LOS		E			E			F			D	

Intersection Summary			
HCM Average Control Delay	66.8	HCM Level of Service	E
HCM Volume to Capacity ratio	1.01		
Actuated Cycle Length (s)	100.0	Sum of lost time (s)	12.0
Intersection Capacity Utilization	96.6%	ICU Level of Service	F
Analysis Period (min)	15		

c Critical Lane Group

Movement	EBL	EBT	EBR	WBL	WBT	WBR	NBL	NBT	NBR	SBL	SBT	SBR
Lane Configurations												
Ideal Flow (vphpl)	1900	1900	1900	1900	1900	1900	1900	1900	1900	1900	1900	1900
Total Lost time (s)		4.0						4.0		4.0	4.0	
Lane Util. Factor		1.00						0.95		0.97	0.95	
Frt		0.86						0.94		1.00	0.98	
Flt Protected		1.00						1.00		0.95	1.00	
Satd. Flow (prot)		1611						3318		3433	3452	
Flt Permitted		1.00						0.95		0.95	1.00	
Satd. Flow (perm)		1611						3146		3433	3452	
Volume (vph)	0	0	10	0	0	0	10	415	297	1500	306	60
Peak-hour factor, PHF	0.95	0.95	0.95	0.95	0.95	0.95	0.95	0.95	0.95	0.95	0.95	0.95
Adj. Flow (vph)	0	0	11	0	0	0	11	437	313	1579	322	63
RTOR Reduction (vph)	0	11	0	0	0	0	0	20	0	0	0	0
Lane Group Flow (vph)	0	0	0	0	0	0	0	741	0	1579	385	0
Turn Type							Perm			Prot		
Protected Phases								2		1	6	
Permitted Phases							2					
Actuated Green, G (s)		0.0						13.0		29.0	50.0	
Effective Green, g (s)		0.0						13.0		29.0	50.0	
Actuated g/C Ratio		0.00						0.26		0.58	1.00	
Clearance Time (s)								4.0		4.0	2.0	
Lane Grp Cap (vph)		0						818		1991	3452	
v/s Ratio Prot										c0.46	0.11	
v/s Ratio Perm								c0.24				
v/c Ratio		0.00						0.91		0.79	0.11	
Uniform Delay, d1		25.0						17.9		8.2	0.0	
Progression Factor		1.00						0.74		1.00	1.00	
Incremental Delay, d2		0.0						14.7		3.3	0.1	
Delay (s)		25.0						27.9		11.5	0.1	
Level of Service		C						C		B	A	
Approach Delay (s)		25.0			0.0			27.9			9.3	
Approach LOS		C			A			C			A	

Intersection Summary			
HCM Average Control Delay	14.5	HCM Level of Service	B
HCM Volume to Capacity ratio	0.83		
Actuated Cycle Length (s)	50.0	Sum of lost time (s)	8.0
Intersection Capacity Utilization	77.4%	ICU Level of Service	D
Analysis Period (min)	15		

c Critical Lane Group

Movement	EBL	EBT	EBR	WBL	WBT	WBR	NBL	NBT	NBR	SBL	SBT	SBR
Lane Configurations												
Ideal Flow (vphpl)	1900	1900	1900	1900	1900	1900	1900	1900	1900	1900	1900	1900
Total Lost time (s)		4.0			4.0			4.0			4.0	
Lane Util. Factor		1.00			1.00			0.95			0.95	
Frpb, ped/bikes		0.97			0.97			0.99			0.99	
Flpb, ped/bikes		0.98			0.97			1.00			0.99	
Frt		0.97			0.96			0.98			0.99	
Flt Protected		0.99			0.99			1.00			0.99	
Satd. Flow (prot)		1695			1658			3410			3442	
Flt Permitted		0.88			0.92			0.93			0.82	
Satd. Flow (perm)		1518			1540			3175			2850	
Volume (vph)	30	50	21	50	100	70	31	561	80	50	276	20
Peak-hour factor, PHF	0.95	0.95	0.95	0.95	0.95	0.95	0.95	0.95	0.95	0.95	0.95	0.95
Adj. Flow (vph)	32	53	22	53	105	74	33	591	84	53	291	21
RTOR Reduction (vph)	0	15	0	0	34	0	0	21	0	0	9	0
Lane Group Flow (vph)	0	92	0	0	198	0	0	687	0	0	356	0
Confl. Peds. (#/hr)	100		100	100		100	100		100	100		100
Turn Type	Perm			Perm			Perm			Perm		
Protected Phases		4			8			2			6	
Permitted Phases	4			8			2			6		
Actuated Green, G (s)		17.0			17.0			25.0			25.0	
Effective Green, g (s)		17.0			17.0			25.0			25.0	
Actuated g/C Ratio		0.34			0.34			0.50			0.50	
Clearance Time (s)		4.0			4.0			4.0			4.0	
Lane Grp Cap (vph)		516			524			1588			1425	
v/s Ratio Prot												
v/s Ratio Perm		0.06			c0.13			c0.22			0.12	
v/c Ratio		0.18			0.38			0.43			0.25	
Uniform Delay, d1		11.6			12.5			8.0			7.1	
Progression Factor		1.00			1.00			1.00			1.00	
Incremental Delay, d2		0.8			2.1			0.9			0.4	
Delay (s)		12.4			14.6			8.8			7.6	
Level of Service		B			B			A			A	
Approach Delay (s)		12.4			14.6			8.8			7.6	
Approach LOS		B			B			A			A	

Intersection Summary			
HCM Average Control Delay	9.7	HCM Level of Service	A
HCM Volume to Capacity ratio	0.41		
Actuated Cycle Length (s)	50.0	Sum of lost time (s)	8.0
Intersection Capacity Utilization	68.6%	ICU Level of Service	C
Analysis Period (min)	15		
c Critical Lane Group			

Movement	EBL	EBT	EBR	WBL	WBT	WBR	NBL	NBT	NBR	SBL	SBT	SBR
Lane Configurations												
Ideal Flow (vphpl)	1900	1900	1900	1900	1900	1900	1900	1900	1900	1900	1900	1900
Total Lost time (s)		4.0			4.0			4.0			4.0	
Lane Util. Factor		1.00			1.00			0.95			0.91	
Frpb, ped/bikes		0.95			0.97			0.99			0.98	
Flpb, ped/bikes		0.97			0.98			1.00			1.00	
Frt		0.95			0.97			0.99			0.99	
Flt Protected		0.98			0.99			1.00			1.00	
Satd. Flow (prot)		1619			1680			3467			4930	
Flt Permitted		0.80			0.83			0.87			0.85	
Satd. Flow (perm)		1322			1408			3010			4203	
Volume (vph)	60	60	60	32	60	30	50	1504	62	30	976	70
Peak-hour factor, PHF	0.95	0.95	0.95	0.95	0.95	0.95	0.95	0.95	0.95	0.95	0.95	0.95
Adj. Flow (vph)	63	63	63	34	63	32	53	1583	65	32	1027	74
RTOR Reduction (vph)	0	28	0	0	5	0	0	2	0	0	5	0
Lane Group Flow (vph)	0	161	0	0	124	0	0	1699	0	0	1128	0
Confl. Peds. (#/hr)	100		100	100		100	100		100	100		100
Turn Type	Perm			Perm			Perm			Perm		
Protected Phases		4			4			2			6	
Permitted Phases	4			4			2			6		
Actuated Green, G (s)		12.1			12.1			58.9			58.9	
Effective Green, g (s)		12.6			12.6			59.4			59.4	
Actuated g/C Ratio		0.16			0.16			0.74			0.74	
Clearance Time (s)		4.5			4.5			4.5			4.5	
Vehicle Extension (s)		2.0			2.0			2.0			2.0	
Lane Grp Cap (vph)		208			222			2235			3121	
v/s Ratio Prot												
v/s Ratio Perm		c0.12			0.09			c0.56			0.27	
v/c Ratio		0.77			0.56			0.76			0.36	
Uniform Delay, d1		32.3			31.1			6.1			3.6	
Progression Factor		1.00			1.00			1.27			1.00	
Incremental Delay, d2		15.1			1.7			1.0			0.3	
Delay (s)		47.4			32.9			8.7			4.0	
Level of Service		D			C			A			A	
Approach Delay (s)		47.4			32.9			8.7			4.0	
Approach LOS		D			C			A			A	

Intersection Summary			
HCM Average Control Delay	10.3	HCM Level of Service	B
HCM Volume to Capacity ratio	0.76		
Actuated Cycle Length (s)	80.0	Sum of lost time (s)	8.0
Intersection Capacity Utilization	104.2%	ICU Level of Service	G
Analysis Period (min)	15		
c Critical Lane Group			

Movement	EBL	EBT	EBR	WBL	WBT	WBR	NBL	NBT	NBR	SBL	SBT	SBR
Lane Configurations												
Ideal Flow (vphpl)	1900	1900	1900	1900	1900	1900	1900	1900	1900	1900	1900	1900
Total Lost time (s)	4.0	4.0		4.0	4.0		4.0	4.0		4.0	4.0	
Lane Util. Factor	1.00	0.95		1.00	0.95		1.00	1.00		1.00	1.00	
Frpb, ped/bikes	1.00	1.00		1.00	0.99		1.00	1.00		1.00	1.00	
Flpb, ped/bikes	1.00	1.00		1.00	1.00		0.98	1.00		1.00	1.00	
Frt	1.00	0.99		1.00	0.98		1.00	0.98		1.00	0.98	
Flt Protected	0.95	1.00		0.95	1.00		0.95	1.00		0.95	1.00	
Satd. Flow (prot)	1761	3487		1766	3440		1738	1818		1764	1817	
Flt Permitted	0.28	1.00		0.16	1.00		0.57	1.00		0.36	1.00	
Satd. Flow (perm)	518	3487		296	3440		1050	1818		669	1817	
Volume (vph)	40	836	80	53	572	103	130	391	65	105	200	30
Peak-hour factor, PHF	0.95	0.95	0.95	0.95	0.95	0.95	0.95	0.95	0.95	0.95	0.95	0.95
Adj. Flow (vph)	42	880	84	56	602	108	137	412	68	111	211	32
RTOR Reduction (vph)	0	9	0	0	18	0	0	8	0	0	7	0
Lane Group Flow (vph)	42	955	0	56	692	0	137	473	0	111	236	0
Confl. Peds. (#/hr)	12		12	12		12	42		12	12		42
Turn Type	Perm			Perm			Perm			Perm		
Protected Phases		4			8			2			6	
Permitted Phases	4			8			2			6		
Actuated Green, G (s)	33.0	33.0		33.0	33.0		40.5	40.5		40.5	40.5	
Effective Green, g (s)	32.0	32.0		32.0	32.0		40.0	40.0		40.0	40.0	
Actuated g/C Ratio	0.40	0.40		0.40	0.40		0.50	0.50		0.50	0.50	
Clearance Time (s)	3.0	3.0		3.0	3.0		3.5	3.5		3.5	3.5	
Lane Grp Cap (vph)	207	1395		118	1376		525	909		335	909	
v/s Ratio Prot		c0.27			0.20			c0.26			0.13	
v/s Ratio Perm	0.08			0.19			0.13			0.17		
v/c Ratio	0.20	0.68		0.47	0.50		0.26	0.52		0.33	0.26	
Uniform Delay, d1	15.7	19.8		17.8	18.0		11.5	13.5		12.0	11.5	
Progression Factor	1.00	1.00		1.77	1.92		1.73	1.78		1.00	1.00	
Incremental Delay, d2	2.2	2.7		10.8	1.1		0.4	0.7		2.6	0.7	
Delay (s)	17.9	22.6		42.4	35.6		20.2	24.8		14.6	12.2	
Level of Service	B	C		D	D		C	C		B	B	
Approach Delay (s)		22.4			36.1			23.8			12.9	
Approach LOS		C			D			C			B	

Intersection Summary			
HCM Average Control Delay	25.3	HCM Level of Service	C
HCM Volume to Capacity ratio	0.59		
Actuated Cycle Length (s)	80.0	Sum of lost time (s)	8.0
Intersection Capacity Utilization	82.2%	ICU Level of Service	E
Analysis Period (min)	15		
c Critical Lane Group			

Movement	EBL	EBT	EBR	WBL	WBT	WBR	NBL	NBT	NBR	SBL	SBT	SBR
Lane Configurations												
Ideal Flow (vphpl)	1900	1900	1900	1900	1900	1900	1900	1900	1900	1900	1900	1900
Total Lost time (s)	4.0	4.0		4.0	4.0			4.0			4.0	
Lane Util. Factor	1.00	0.95		1.00	0.95			0.95			0.95	
Frpb, ped/bikes	1.00	0.99		1.00	1.00			1.00			1.00	
Flpb, ped/bikes	0.99	1.00		0.99	1.00			1.00			1.00	
Frt	1.00	0.99		1.00	0.99			0.98			0.98	
Flt Protected	0.95	1.00		0.95	1.00			0.99			0.99	
Satd. Flow (prot)	1756	3471		1750	3488			3422			3424	
Flt Permitted	0.22	1.00		0.16	1.00			0.81			0.87	
Satd. Flow (perm)	409	3471		295	3488			2817			3003	
Volume (vph)	50	926	80	59	638	53	100	281	57	33	180	40
Peak-hour factor, PHF	0.97	0.97	0.97	0.97	0.97	0.97	0.97	0.97	0.97	0.97	0.97	0.97
Adj. Flow (vph)	52	955	82	61	658	55	103	290	59	34	186	41
RTOR Reduction (vph)	0	8	0	0	8	0	0	3	0	0	17	0
Lane Group Flow (vph)	52	1029	0	61	705	0	0	449	0	0	244	0
Confl. Peds. (#/hr)	24		78	78		24	8		6	6		8
Turn Type	Perm			Perm			Perm			Perm		
Protected Phases		4			8			2			6	
Permitted Phases	4			8			2			6		
Actuated Green, G (s)	24.0	24.0		24.0	24.0			46.0			46.0	
Effective Green, g (s)	25.0	25.0		25.0	25.0			47.0			47.0	
Actuated g/C Ratio	0.31	0.31		0.31	0.31			0.59			0.59	
Clearance Time (s)	5.0	5.0		5.0	5.0			5.0			5.0	
Lane Grp Cap (vph)	128	1085		92	1090			1655			1764	
v/s Ratio Prot		c0.30			0.20							
v/s Ratio Perm	0.13			0.21				c0.16			0.08	
v/c Ratio	0.41	0.95		0.66	0.65			0.27			0.14	
Uniform Delay, d1	21.7	26.9		23.8	23.7			8.1			7.4	
Progression Factor	0.49	0.51		0.81	0.79			1.01			1.00	
Incremental Delay, d2	7.3	14.6		27.9	2.6			0.3			0.2	
Delay (s)	18.0	28.3		47.3	21.2			8.5			7.6	
Level of Service	B	C		D	C			A			A	
Approach Delay (s)		27.8			23.2			8.5			7.6	
Approach LOS		C			C			A			A	

Intersection Summary			
HCM Average Control Delay	21.0	HCM Level of Service	C
HCM Volume to Capacity ratio	0.51		
Actuated Cycle Length (s)	80.0	Sum of lost time (s)	8.0
Intersection Capacity Utilization	71.9%	ICU Level of Service	C
Analysis Period (min)	15		
c Critical Lane Group			

Movement	EBL	EBT	EBR	WBL	WBT	WBR	NBL	NBT	NBR	SBL	SBT	SBR
Lane Configurations												
Ideal Flow (vphpl)	1900	1900	1900	1900	1900	1900	1900	1900	1900	1900	1900	1900
Total Lost time (s)	4.0	4.0		4.0	4.0			4.0			4.0	
Lane Util. Factor	1.00	0.95		1.00	0.95			0.95			0.95	
Frpb, ped/bikes	1.00	1.00		1.00	0.99			0.99			1.00	
Flpb, ped/bikes	1.00	1.00		0.99	1.00			1.00			1.00	
Frt	1.00	0.99		1.00	0.97			0.97			0.98	
Flt Protected	0.95	1.00		0.95	1.00			0.99			0.99	
Satd. Flow (prot)	1765	3482		1760	3426			3398			3433	
Flt Permitted	0.23	1.00		0.17	1.00			0.87			0.75	
Satd. Flow (perm)	432	3482		312	3426			2975			2588	
Volume (vph)	70	903	84	114	685	149	65	403	113	81	226	40
Peak-hour factor, PHF	0.99	0.99	0.99	0.99	0.99	0.99	0.99	0.99	0.99	0.99	0.99	0.99
Adj. Flow (vph)	71	912	85	115	692	151	66	407	114	82	228	40
RTOR Reduction (vph)	0	8	0	0	23	0	0	26	0	0	12	0
Lane Group Flow (vph)	71	989	0	115	820	0	0	561	0	0	338	0
Confl. Peds. (#/hr)	8		39	39		8			25	25		
Turn Type	Perm			Perm			Perm			Perm		
Protected Phases		4			8			2			6	
Permitted Phases	4			8			2			6		
Actuated Green, G (s)	35.5	35.5		35.5	35.5			38.0			38.0	
Effective Green, g (s)	35.0	35.0		35.0	35.0			37.0			37.0	
Actuated g/C Ratio	0.44	0.44		0.44	0.44			0.46			0.46	
Clearance Time (s)	3.5	3.5		3.5	3.5			3.0			3.0	
Lane Grp Cap (vph)	189	1523		137	1499			1376			1197	
v/s Ratio Prot		0.28			0.24							
v/s Ratio Perm	0.16			c0.37				c0.19			0.13	
v/c Ratio	0.38	0.65		0.84	0.55			0.41			0.28	
Uniform Delay, d1	15.1	17.7		20.0	16.6			14.2			13.3	
Progression Factor	0.96	1.03		0.84	0.84			1.37			1.00	
Incremental Delay, d2	2.7	1.0		41.4	1.4			0.8			0.6	
Delay (s)	17.1	19.3		58.1	15.4			20.3			13.9	
Level of Service	B	B		E	B			C			B	
Approach Delay (s)		19.1			20.5			20.3			13.9	
Approach LOS		B			C			C			B	

Intersection Summary			
HCM Average Control Delay	19.2	HCM Level of Service	B
HCM Volume to Capacity ratio	0.62		
Actuated Cycle Length (s)	80.0	Sum of lost time (s)	8.0
Intersection Capacity Utilization	87.9%	ICU Level of Service	E
Analysis Period (min)	15		
c Critical Lane Group			

Movement	EBT	EBR	WBL	WBT	NBL	NBR
Lane Configurations						
Ideal Flow (vphpl)	1900	1900	1900	1900	1900	1900
Total Lost time (s)	4.0		4.0	4.0	4.0	
Lane Util. Factor	0.95		1.00	0.95	1.00	
Frpb, ped/bikes	0.95		1.00	1.00	1.00	
Flpb, ped/bikes	1.00		1.00	1.00	1.00	
Frt	0.98		1.00	1.00	0.96	
Flt Protected	1.00		0.95	1.00	0.96	
Satd. Flow (prot)	3305		1770	3539	1732	
Flt Permitted	1.00		0.95	1.00	0.96	
Satd. Flow (perm)	3305		1770	3539	1732	
Volume (vph)	996	112	56	833	126	46
Peak-hour factor, PHF	0.97	0.97	0.97	0.97	0.97	0.97
Adj. Flow (vph)	1027	115	58	859	130	47
RTOR Reduction (vph)	0	0	0	0	0	0
Lane Group Flow (vph)	1142	0	58	859	177	0
Confl. Peds. (#/hr)		213	348			
Turn Type			Prot			
Protected Phases	4		3	8	2	
Permitted Phases						
Actuated Green, G (s)	48.9		5.7	58.6	13.4	
Effective Green, g (s)	48.9		5.7	58.6	13.4	
Actuated g/C Ratio	0.61		0.07	0.73	0.17	
Clearance Time (s)	4.0		4.0	4.0	4.0	
Vehicle Extension (s)	3.0		3.0	3.0	3.0	
Lane Grp Cap (vph)	2020		126	2592	290	
v/s Ratio Prot	c0.35		c0.03	0.24	c0.10	
v/s Ratio Perm						
v/c Ratio	0.57		0.46	0.33	0.61	
Uniform Delay, d1	9.2		35.7	3.8	30.9	
Progression Factor	0.49		1.30	0.45	0.98	
Incremental Delay, d2	0.9		2.0	0.3	3.5	
Delay (s)	5.5		48.4	2.0	33.7	
Level of Service	A		D	A	C	
Approach Delay (s)	5.5			4.9	33.7	
Approach LOS	A			A	C	

Intersection Summary			
HCM Average Control Delay	7.5	HCM Level of Service	A
HCM Volume to Capacity ratio	0.57		
Actuated Cycle Length (s)	80.0	Sum of lost time (s)	12.0
Intersection Capacity Utilization	55.0%	ICU Level of Service	B
Analysis Period (min)	15		
c Critical Lane Group			

Movement	EBL	EBT	EBR	WBL	WBT	WBR	NBL	NBT	NBR	SBL	SBT	SBR
Lane Configurations												
Ideal Flow (vphpl)	1900	1900	1900	1900	1900	1900	1900	1900	1900	1900	1900	1900
Total Lost time (s)	4.0	4.0		4.0	4.0		4.0	4.0		4.0	4.0	
Lane Util. Factor	1.00	0.95		1.00	0.95		1.00	0.95		1.00	0.95	
Frpb, ped/bikes	1.00	0.99		1.00	0.96		1.00	0.99		1.00	0.97	
Flpb, ped/bikes	0.94	1.00		0.98	1.00		1.00	1.00		1.00	1.00	
Frt	1.00	0.98		1.00	0.97		1.00	0.99		1.00	0.97	
Flt Protected	0.95	1.00		0.95	1.00		0.95	1.00		0.95	1.00	
Satd. Flow (prot)	1657	3417		1732	3316		1770	3474		1770	3344	
Flt Permitted	0.29	1.00		0.16	1.00		0.95	1.00		0.95	1.00	
Satd. Flow (perm)	505	3417		292	3316		1770	3474		1770	3344	
Volume (vph)	219	714	109	54	498	110	226	1258	104	110	663	165
Peak-hour factor, PHF	0.98	0.98	0.98	0.98	0.98	0.98	0.98	0.98	0.98	0.98	0.98	0.98
Adj. Flow (vph)	223	729	111	55	508	112	231	1284	106	112	677	168
RTOR Reduction (vph)	0	15	0	0	24	0	0	7	0	0	27	0
Lane Group Flow (vph)	223	825	0	55	596	0	231	1383	0	112	818	0
Confl. Peds. (#/hr)	94		86	86		94			40			111
Turn Type	Perm			Perm			Prot			Prot		
Protected Phases		4			8		5	2		1	6	
Permitted Phases	4			8								
Actuated Green, G (s)	25.5	25.5		25.5	25.5		12.6	32.8		8.2	28.4	
Effective Green, g (s)	26.0	26.0		26.0	26.0		13.1	33.3		8.7	28.9	
Actuated g/C Ratio	0.32	0.32		0.32	0.32		0.16	0.42		0.11	0.36	
Clearance Time (s)	4.5	4.5		4.5	4.5		4.5	4.5		4.5	4.5	
Vehicle Extension (s)	2.0	2.0		2.0	2.0		2.0	2.0		2.0	2.0	
Lane Grp Cap (vph)	164	1111		95	1078		290	1446		192	1208	
v/s Ratio Prot		0.24			0.18		c0.13	c0.40		0.06	0.24	
v/s Ratio Perm	c0.44			0.19								
v/c Ratio	1.36	0.74		0.58	0.55		0.80	0.96		0.58	0.68	
Uniform Delay, d1	27.0	24.0		22.4	22.2		32.2	22.6		33.9	21.6	
Progression Factor	1.65	1.73		1.00	1.00		1.44	0.64		0.89	1.37	
Incremental Delay, d2	191.5	2.0		5.2	0.4		7.9	10.2		2.7	2.8	
Delay (s)	236.1	43.6		27.7	22.6		54.1	24.6		32.9	32.4	
Level of Service	F	D		C	C		D	C		C	C	
Approach Delay (s)		84.0			23.0			28.8			32.5	
Approach LOS		F			C			C			C	

Intersection Summary			
HCM Average Control Delay	42.3	HCM Level of Service	D
HCM Volume to Capacity ratio	1.05		
Actuated Cycle Length (s)	80.0	Sum of lost time (s)	8.0
Intersection Capacity Utilization	88.2%	ICU Level of Service	E
Analysis Period (min)	15		

c Critical Lane Group

Movement	WBL	WBR	NBT	NBR	SBL	SBT
Lane Configurations						
Sign Control	Stop		Free			Free
Grade	0%		0%			0%
Volume (veh/h)	20	41	1562	0	20	801
Peak Hour Factor	0.95	0.95	0.95	0.95	0.95	0.95
Hourly flow rate (vph)	21	43	1644	0	21	843
Pedestrians	52		52			45
Lane Width (ft)	12.0		12.0			12.0
Walking Speed (ft/s)	4.0		4.0			4.0
Percent Blockage	4		4			4
Right turn flare (veh)						
Median type	None					
Median storage veh)						
Upstream signal (ft)			230			471
pX, platoon unblocked	0.84	0.76			0.76	
vC, conflicting volume	2212	919			1696	
vC1, stage 1 conf vol						
vC2, stage 2 conf vol						
vCu, unblocked vol	1646	577			1600	
tC, single (s)	6.8	6.9			4.1	
tC, 2 stage (s)						
tF (s)	3.5	3.3			2.2	
p0 queue free %	67	87			93	
cM capacity (veh/h)	65	322			294	

Direction, Lane #	WB 1	NB 1	NB 2	SB 1	SB 2	SB 3
Volume Total	64	1096	548	21	422	422
Volume Left	21	0	0	21	0	0
Volume Right	43	0	0	0	0	0
cSH	140	1700	1700	294	1700	1700
Volume to Capacity	0.46	0.64	0.32	0.07	0.25	0.25
Queue Length 95th (ft)	52	0	0	6	0	0
Control Delay (s)	51.0	0.0	0.0	18.2	0.0	0.0
Lane LOS	F			C		
Approach Delay (s)	51.0	0.0		0.4		
Approach LOS	F					

Intersection Summary			
Average Delay	1.4		
Intersection Capacity Utilization	61.6%	ICU Level of Service	B
Analysis Period (min)	15		

Movement	EBL	EBT	EBR	WBL	WBT	WBR	NBL	NBT	NBR	SBL	SBT	SBR
Lane Configurations												
Ideal Flow (vphpl)	1900	1900	1900	1900	1900	1900	1900	1900	1900	1900	1900	1900
Total Lost time (s)		4.0		4.0	4.0			4.0		4.0	4.0	
Lane Util. Factor		0.91		1.00	0.95			1.00		1.00	1.00	
Frpb, ped/bikes		1.00		1.00	0.99			1.00		1.00	0.99	
Flpb, ped/bikes		1.00		1.00	1.00			1.00		1.00	1.00	
Frt		0.99		1.00	0.96			0.98		1.00	0.98	
Flt Protected		0.99		0.95	1.00			0.99		0.95	1.00	
Satd. Flow (prot)		5018		1768	3396			1794		1764	1803	
Flt Permitted		0.74		0.30	1.00			0.70		0.26	1.00	
Satd. Flow (perm)		3724		555	3396			1263		480	1803	
Volume (vph)	110	700	30	91	660	201	80	375	90	70	273	50
Peak-hour factor, PHF	0.98	0.98	0.98	0.98	0.98	0.98	0.98	0.98	0.98	0.98	0.98	0.98
Adj. Flow (vph)	112	714	31	93	673	205	82	383	92	71	279	51
RTOR Reduction (vph)	0	5	0	0	36	0	0	9	0	0	8	0
Lane Group Flow (vph)	0	852	0	93	842	0	0	548	0	71	322	0
Confl. Peds. (#/hr)	24		4	4		24	48		12	12		48
Turn Type	Perm			Perm			Perm			Perm		
Protected Phases		4			8			2			6	
Permitted Phases	4			8			2			6		
Actuated Green, G (s)		46.0		46.0	46.0			24.0		24.0	24.0	
Effective Green, g (s)		47.0		47.0	47.0			25.0		25.0	25.0	
Actuated g/C Ratio		0.59		0.59	0.59			0.31		0.31	0.31	
Clearance Time (s)		5.0		5.0	5.0			5.0		5.0	5.0	
Lane Grp Cap (vph)		2188		326	1995			395		150	563	
v/s Ratio Prot					c0.25						0.18	
v/s Ratio Perm		0.23		0.17				c0.43		0.15		
v/c Ratio		0.39		0.29	0.42			1.39		0.47	0.57	
Uniform Delay, d1		8.8		8.2	9.1			27.5		22.2	23.0	
Progression Factor		1.00		1.68	1.76			1.00		0.79	0.78	
Incremental Delay, d2		0.5		2.1	0.6			189.4		9.9	4.0	
Delay (s)		9.3		15.8	16.6			216.9		27.3	22.0	
Level of Service		A		B	B			F		C	C	
Approach Delay (s)		9.3			16.5			216.9			23.0	
Approach LOS		A			B			F			C	

Intersection Summary			
HCM Average Control Delay	55.3	HCM Level of Service	E
HCM Volume to Capacity ratio	0.76		
Actuated Cycle Length (s)	80.0	Sum of lost time (s)	8.0
Intersection Capacity Utilization	139.8%	ICU Level of Service	H
Analysis Period (min)	15		
c Critical Lane Group			

Movement	EBL	EBT	EBR	WBL	WBT	WBR	NBL	NBT	NBR	SBL	SBT	SBR
Lane Configurations												
Ideal Flow (vphpl)	1900	1900	1900	1900	1900	1900	1900	1900	1900	1900	1900	1900
Total Lost time (s)		4.0			4.0		4.0	4.0		4.0	4.0	
Lane Util. Factor		0.91			0.91		1.00	1.00		1.00	1.00	
Frpb, ped/bikes		1.00			1.00		1.00	1.00		1.00	1.00	
Flpb, ped/bikes		1.00			1.00		1.00	1.00		1.00	1.00	
Frt		0.99			0.98		1.00	0.96		1.00	0.98	
Flt Protected		0.99			1.00		0.95	1.00		0.95	1.00	
Satd. Flow (prot)		5007			4947		1770	1786		1764	1830	
Flt Permitted		0.76			0.81		0.40	1.00		0.31	1.00	
Satd. Flow (perm)		3812			4025		745	1786		566	1830	
Volume (vph)	80	610	40	81	762	151	60	237	77	70	229	30
Peak-hour factor, PHF	0.95	0.95	0.95	0.95	0.95	0.95	0.95	0.95	0.95	0.95	0.95	0.95
Adj. Flow (vph)	84	642	42	85	802	159	63	249	81	74	241	32
RTOR Reduction (vph)	0	8	0	0	32	0	0	15	0	0	6	0
Lane Group Flow (vph)	0	760	0	0	1014	0	63	315	0	74	267	0
Confl. Peds. (#/hr)			12	12					6	6		
Turn Type	Perm			Perm			Perm			Perm		
Protected Phases		4			8			2			6	
Permitted Phases	4			8			2			6		
Actuated Green, G (s)		51.5			51.5		20.5	20.5		20.5	20.5	
Effective Green, g (s)		51.5			51.5		20.5	20.5		20.5	20.5	
Actuated g/C Ratio		0.64			0.64		0.26	0.26		0.26	0.26	
Clearance Time (s)		4.0			4.0		4.0	4.0		4.0	4.0	
Lane Grp Cap (vph)		2454			2591		191	458		145	469	
v/s Ratio Prot								c0.18			0.15	
v/s Ratio Perm		0.20			c0.25		0.08			0.13		
v/c Ratio		0.31			0.39		0.33	0.69		0.51	0.57	
Uniform Delay, d1		6.3			6.8		24.2	26.9		25.5	25.9	
Progression Factor		1.27			2.02		1.00	1.00		1.13	1.14	
Incremental Delay, d2		0.3			0.4		4.6	8.2		11.4	4.6	
Delay (s)		8.3			14.1		28.7	35.1		40.2	34.1	
Level of Service		A			B		C	D		D	C	
Approach Delay (s)		8.3			14.1			34.0			35.4	
Approach LOS		A			B			C			D	

Intersection Summary			
HCM Average Control Delay	18.3	HCM Level of Service	B
HCM Volume to Capacity ratio	0.48		
Actuated Cycle Length (s)	80.0	Sum of lost time (s)	8.0
Intersection Capacity Utilization	80.9%	ICU Level of Service	D
Analysis Period (min)	15		
c Critical Lane Group			

Movement	EBL	EBT	EBR	WBL	WBT	WBR	NBL	NBT	NBR	SBL	SBT	SBR
Lane Configurations												
Ideal Flow (vphpl)	1900	1900	1900	1900	1900	1900	1900	1900	1900	1900	1900	1900
Total Lost time (s)		4.0			4.0			4.0			4.0	
Lane Util. Factor		0.91			0.91			0.95			0.95	
Frpb, ped/bikes		1.00			1.00			1.00			1.00	
Flpb, ped/bikes		1.00			1.00			1.00			1.00	
Frt		0.99			0.97			0.97			0.97	
Flt Protected		1.00			1.00			0.99			0.98	
Satd. Flow (prot)		5017			4905			3405			3362	
Flt Permitted		0.78			0.84			0.79			0.65	
Satd. Flow (perm)		3934			4112			2703			2202	
Volume (vph)	64	672	40	69	843	221	60	295	75	130	212	82
Peak-hour factor, PHF	0.99	0.99	0.99	0.99	0.99	0.99	0.99	0.99	0.99	0.99	0.99	0.99
Adj. Flow (vph)	65	679	40	70	852	223	61	298	76	131	214	83
RTOR Reduction (vph)	0	7	0	0	51	0	0	22	0	0	26	0
Lane Group Flow (vph)	0	777	0	0	1094	0	0	413	0	0	402	0
Confl. Peds. (#/hr)	9		17	17		9	12		10	10		12
Turn Type	Perm			Perm			Perm			Perm		
Protected Phases		4			8			2			6	
Permitted Phases	4			8			2			6		
Actuated Green, G (s)		50.0			50.0			19.0			19.0	
Effective Green, g (s)		51.5			51.5			20.5			20.5	
Actuated g/C Ratio		0.64			0.64			0.26			0.26	
Clearance Time (s)		5.5			5.5			5.5			5.5	
Lane Grp Cap (vph)		2533			2647			693			564	
v/s Ratio Prot												
v/s Ratio Perm		0.20			c0.27			0.15			c0.18	
v/c Ratio		0.31			0.41			0.60			0.71	
Uniform Delay, d1		6.3			6.9			26.1			27.1	
Progression Factor		1.49			0.75			1.00			1.13	
Incremental Delay, d2		0.3			0.4			3.7			7.4	
Delay (s)		9.7			5.6			29.9			37.9	
Level of Service		A			A			C			D	
Approach Delay (s)		9.7			5.6			29.9			37.9	
Approach LOS		A			A			C			D	

Intersection Summary			
HCM Average Control Delay	15.5	HCM Level of Service	B
HCM Volume to Capacity ratio	0.50		
Actuated Cycle Length (s)	80.0	Sum of lost time (s)	8.0
Intersection Capacity Utilization	112.6%	ICU Level of Service	H
Analysis Period (min)	15		
c Critical Lane Group			

Movement	EBL	EBT	EBR	WBL	WBT	WBR	NBL	NBT	NBR	SBL	SBT	SBR
Lane Configurations												
Ideal Flow (vphpl)	1900	1900	1900	1900	1900	1900	1900	1900	1900	1900	1900	1900
Total Lost time (s)		4.0			4.0			4.0			4.0	
Lane Util. Factor		0.91			0.91			1.00			1.00	
Frpb, ped/bikes		1.00			0.99			1.00			0.96	
Flpb, ped/bikes		1.00			1.00			1.00			1.00	
Frt		1.00			0.99			0.93			0.92	
Flt Protected		1.00			1.00			0.98			0.98	
Satd. Flow (prot)		5052			4973			1695			1608	
Flt Permitted		0.75			0.93			0.85			0.86	
Satd. Flow (perm)		3828			4620			1482			1404	
Volume (vph)	90	817	10	10	931	60	10	0	10	138	0	189
Peak-hour factor, PHF	0.96	0.96	0.95	0.95	0.96	0.96	0.95	0.95	0.95	0.96	0.95	0.96
Adj. Flow (vph)	94	851	11	11	970	62	11	0	11	144	0	197
RTOR Reduction (vph)	0	1	0	0	0	0	0	7	0	0	0	0
Lane Group Flow (vph)	0	955	0	0	1043	0	0	15	0	0	341	0
Confl. Peds. (#/hr)						79						79
Turn Type	Perm			Perm			Perm			Perm		
Protected Phases		4			8			2			6	
Permitted Phases	4			8			2			6		
Actuated Green, G (s)		45.9			45.9			26.1			26.1	
Effective Green, g (s)		45.9			45.9			26.1			26.1	
Actuated g/C Ratio		0.57			0.57			0.33			0.33	
Clearance Time (s)		4.0			4.0			4.0			4.0	
Vehicle Extension (s)		3.0			3.0			3.0			3.0	
Lane Grp Cap (vph)		2196			2651			484			458	
v/s Ratio Prot												
v/s Ratio Perm		c0.25			0.23			0.01			c0.24	
v/c Ratio		0.43			0.39			0.03			0.74	
Uniform Delay, d1		9.7			9.4			18.3			24.0	
Progression Factor		0.76			1.00			1.00			0.74	
Incremental Delay, d2		0.6			0.4			0.0			6.4	
Delay (s)		7.9			9.8			18.4			24.1	
Level of Service		A			A			B			C	
Approach Delay (s)		7.9			9.8			18.4			24.1	
Approach LOS		A			A			B			C	

Intersection Summary			
HCM Average Control Delay	11.2	HCM Level of Service	B
HCM Volume to Capacity ratio	0.55		
Actuated Cycle Length (s)	80.0	Sum of lost time (s)	8.0
Intersection Capacity Utilization	73.5%	ICU Level of Service	D
Analysis Period (min)	15		
c Critical Lane Group			

Movement	EBL	EBT	EBR	WBL	WBT	WBR	NBL	NBT	NBR	SBL	SBT	SBR
Lane Configurations												
Ideal Flow (vphpl)	1900	1900	1900	1900	1900	1900	1900	1900	1900	1900	1900	1900
Total Lost time (s)		4.0			4.0		4.0	4.0		4.0	4.0	
Lane Util. Factor		0.91			0.91		1.00	0.95		1.00	0.95	
Frpb, ped/bikes		1.00			0.99		1.00	0.99		1.00	0.99	
Flpb, ped/bikes		1.00			1.00		0.99	1.00		0.99	1.00	
Frt		0.99			0.95		1.00	0.98		1.00	0.98	
Flt Protected		0.99			1.00		0.95	1.00		0.95	1.00	
Satd. Flow (prot)		4925			4756		1747	3451		1745	3464	
Flt Permitted		0.67			0.76		0.31	1.00		0.14	1.00	
Satd. Flow (perm)		3352			3623		575	3451		260	3464	
Volume (vph)	269	605	91	90	784	427	110	898	100	195	568	67
Peak-hour factor, PHF	0.95	0.95	0.95	0.95	0.95	0.95	0.95	0.95	0.95	0.95	0.95	0.95
Adj. Flow (vph)	283	637	96	95	825	449	116	945	105	205	598	71
RTOR Reduction (vph)	0	9	0	0	6	0	0	7	0	0	7	0
Lane Group Flow (vph)	0	1007	0	0	1363	0	116	1043	0	205	662	0
Confl. Peds. (#/hr)	26		19			26	39		92	92		39
Turn Type	Perm			pm+pt			Perm			Perm		
Protected Phases		4		3	8			2			6	
Permitted Phases	4			8			2			6		
Actuated Green, G (s)		37.9			37.9		34.4	34.4		34.4	34.4	
Effective Green, g (s)		39.4			39.4		35.4	35.4		35.4	35.4	
Actuated g/C Ratio		0.48			0.48		0.43	0.43		0.43	0.43	
Clearance Time (s)		5.5			5.5		5.0	5.0		5.0	5.0	
Vehicle Extension (s)		2.0			2.0		2.0	2.0		2.0	2.0	
Lane Grp Cap (vph)		1595			1724		246	1475		111	1481	
v/s Ratio Prot								0.30			0.19	
v/s Ratio Perm		0.30			c0.38		0.20			c0.79		
v/c Ratio		1.64dl			0.79		0.47	0.71		1.85	0.45	
Uniform Delay, d1		16.3			18.2		17.0	19.4		23.7	16.8	
Progression Factor		1.00			1.00		1.00	1.00		1.00	1.00	
Incremental Delay, d2		0.6			2.4		6.4	2.9		413.7	1.0	
Delay (s)		16.9			20.6		23.4	22.3		437.4	17.7	
Level of Service		B			C		C	C		F	B	
Approach Delay (s)		16.9			20.6			22.4			116.2	
Approach LOS		B			C			C			F	

Intersection Summary			
HCM Average Control Delay	39.1	HCM Level of Service	D
HCM Volume to Capacity ratio	1.29		
Actuated Cycle Length (s)	82.8	Sum of lost time (s)	8.0
Intersection Capacity Utilization	99.4%	ICU Level of Service	F
Analysis Period (min)	15		

dl Defacto Left Lane. Recode with 1 though lane as a left lane.
c Critical Lane Group

Movement	EBL	EBT	EBR	WBL	WBT	WBR	NBL	NBT	NBR	SBL	SBT	SBR
Lane Configurations												
Ideal Flow (vphpl)	1900	1900	1900	1900	1900	1900	1900	1900	1900	1900	1900	1900
Total Lost time (s)		4.0			4.0			4.0	4.0		4.0	
Lane Util. Factor		0.91			0.91			1.00	1.00		1.00	
Frpb, ped/bikes		1.00			1.00			1.00	0.89		0.94	
Flpb, ped/bikes		1.00			1.00			0.96	1.00		0.98	
Frt		0.99			1.00			1.00	0.85		0.92	
Flt Protected		1.00			1.00			0.98	1.00		0.99	
Satd. Flow (prot)		5026			5019			1748	1406		1566	
Flt Permitted		0.84			0.78			0.81	1.00		0.92	
Satd. Flow (perm)		4232			3937			1453	1406		1455	
Volume (vph)	40	857	34	100	1167	40	94	94	200	30	30	80
Peak-hour factor, PHF	0.99	0.99	0.99	0.99	0.99	0.99	0.99	0.99	0.99	0.99	0.99	0.99
Adj. Flow (vph)	40	866	34	101	1179	40	95	95	202	30	30	81
RTOR Reduction (vph)	0	5	0	0	4	0	0	0	76	0	37	0
Lane Group Flow (vph)	0	935	0	0	1316	0	0	190	126	0	104	0
Confl. Peds. (#/hr)	100		100	100		100	100		100	100		100
Turn Type	Perm			Perm			Perm		Perm	Perm		
Protected Phases		4			8			2			6	
Permitted Phases	4			8			2		2	6		
Actuated Green, G (s)		49.5			49.5			24.5	24.5		24.5	
Effective Green, g (s)		48.5			48.5			23.5	23.5		23.5	
Actuated g/C Ratio		0.61			0.61			0.29	0.29		0.29	
Clearance Time (s)		3.0			3.0			3.0	3.0		3.0	
Lane Grp Cap (vph)		2566			2387			427	413		427	
v/s Ratio Prot												
v/s Ratio Perm		0.22			c0.33			c0.13	0.09		0.07	
v/c Ratio		0.36			0.55			0.44	0.31		0.24	
Uniform Delay, d1		8.0			9.3			23.0	21.9		21.5	
Progression Factor		1.00			1.00			1.00	1.00		1.00	
Incremental Delay, d2		0.4			0.9			3.3	1.9		1.4	
Delay (s)		8.4			10.2			26.3	23.8		22.9	
Level of Service		A			B			C	C		C	
Approach Delay (s)		8.4			10.2			25.0			22.9	
Approach LOS		A			B			C			C	

Intersection Summary			
HCM Average Control Delay	12.3	HCM Level of Service	B
HCM Volume to Capacity ratio	0.52		
Actuated Cycle Length (s)	80.0	Sum of lost time (s)	8.0
Intersection Capacity Utilization	108.2%	ICU Level of Service	G
Analysis Period (min)	15		

c Critical Lane Group

Movement	EBL	EBT	EBR	WBL	WBT	WBR	NBL	NBT	NBR	SBL	SBT	SBR
Lane Configurations												
Ideal Flow (vphpl)	1900	1900	1900	1900	1900	1900	1900	1900	1900	1900	1900	1900
Total Lost time (s)	4.0	4.0		4.0	4.0		4.0	4.0	4.0	4.0	4.0	4.0
Lane Util. Factor	1.00	0.91		1.00	0.91		1.00	0.95	1.00	1.00	0.95	1.00
Frpb, ped/bikes	1.00	0.98		1.00	0.99		1.00	1.00	0.94	1.00	1.00	0.95
Flpb, ped/bikes	1.00	1.00		1.00	1.00		1.00	1.00	1.00	1.00	1.00	1.00
Frt	1.00	0.98		1.00	0.97		1.00	1.00	0.85	1.00	1.00	0.85
Flt Protected	0.95	1.00		0.95	1.00		0.95	1.00	1.00	0.95	1.00	1.00
Satd. Flow (prot)	1770	4919		1770	4885		1770	3539	1488	1770	3539	1497
Flt Permitted	0.95	1.00		0.95	1.00		0.95	1.00	1.00	0.95	1.00	1.00
Satd. Flow (perm)	1770	4919		1770	4885		1770	3539	1488	1770	3539	1497
Volume (vph)	200	755	101	110	937	240	230	851	180	380	421	110
Peak-hour factor, PHF	0.95	0.95	0.95	0.95	0.95	0.95	0.95	0.95	0.95	0.95	0.95	0.95
Adj. Flow (vph)	211	795	106	116	986	253	242	896	189	400	443	116
RTOR Reduction (vph)	0	14	0	0	38	0	0	0	24	0	0	69
Lane Group Flow (vph)	211	887	0	116	1201	0	242	896	165	400	443	47
Confl. Peds. (#/hr)			81			22			50			43
Turn Type	Prot			Prot			Prot		pm+ov	Prot		pm+ov
Protected Phases	7	4		3	8		5	2	3	1	6	7
Permitted Phases									2			6
Actuated Green, G (s)	12.0	34.0		12.0	34.0		21.0	33.0	45.0	25.0	37.0	49.0
Effective Green, g (s)	11.0	35.0		11.0	35.0		20.0	34.0	45.0	24.0	38.0	49.0
Actuated g/C Ratio	0.09	0.29		0.09	0.29		0.17	0.28	0.38	0.20	0.32	0.41
Clearance Time (s)	3.0	5.0		3.0	5.0		3.0	5.0	3.0	3.0	5.0	3.0
Vehicle Extension (s)	3.0	3.0		3.0	3.0		3.0	3.0	3.0	3.0	3.0	3.0
Lane Grp Cap (vph)	162	1435		162	1425		295	1003	608	354	1121	661
v/s Ratio Prot	c0.12	0.18		0.07	c0.25		0.14	c0.25	0.02	c0.23	c0.13	0.01
v/s Ratio Perm									0.09			0.03
v/c Ratio	1.30	0.62		0.72	0.84		0.82	0.89	0.27	1.13	0.40	0.07
Uniform Delay, d1	54.5	36.7		53.0	39.9		48.3	41.3	26.1	48.0	32.0	21.6
Progression Factor	1.00	1.00		1.00	1.00		1.00	1.00	1.00	1.00	1.00	1.00
Incremental Delay, d2	173.6	2.0		14.0	6.2		16.5	12.0	0.2	87.9	1.0	0.0
Delay (s)	228.1	38.7		67.0	46.2		64.7	53.3	26.3	135.9	33.1	21.7
Level of Service	F	D		E	D		E	D	C	F	C	C
Approach Delay (s)		74.7			47.9			51.5			74.6	
Approach LOS		E			D			D			E	

Intersection Summary			
HCM Average Control Delay	60.6	HCM Level of Service	E
HCM Volume to Capacity ratio	0.99		
Actuated Cycle Length (s)	120.0	Sum of lost time (s)	20.0
Intersection Capacity Utilization	92.9%	ICU Level of Service	F
Analysis Period (min)	15		

c Critical Lane Group

Movement	EBL	EBT	EBR	WBL	WBT	WBR	NBL	NBT	NBR	SBL	SBT	SBR
Lane Configurations												
Ideal Flow (vphpl)	1900	1900	1900	1900	1900	1900	1900	1900	1900	1900	1900	1900
Total Lost time (s)		4.0			4.0		4.0	4.0		4.0	4.0	
Lane Util. Factor		1.00			1.00		1.00	0.95		1.00	0.95	
Frpb, ped/bikes		0.94			0.96		1.00	0.99		1.00	0.99	
Flpb, ped/bikes		0.97			0.97		0.96	1.00		0.95	1.00	
Frt		0.96			0.96		1.00	0.99		1.00	0.99	
Flt Protected		0.98			0.98		0.95	1.00		0.95	1.00	
Satd. Flow (prot)		1590			1636		1693	3458		1675	3453	
Flt Permitted		0.67			0.82		0.29	1.00		0.34	1.00	
Satd. Flow (perm)		1088			1358		509	3458		592	3453	
Volume (vph)	111	50	70	60	70	63	140	683	50	42	794	63
Peak-hour factor, PHF	0.95	0.95	0.95	0.95	0.95	0.95	0.95	0.95	0.95	0.95	0.95	0.95
Adj. Flow (vph)	117	53	74	63	74	66	147	719	53	44	836	66
RTOR Reduction (vph)	0	20	0	0	22	0	0	5	0	0	6	0
Lane Group Flow (vph)	0	224	0	0	181	0	147	767	0	44	896	0
Confl. Peds. (#/hr)	100		100	100		100	100		100	100		100
Turn Type	Perm			Perm			Perm			Perm		
Protected Phases		4			4			2			6	
Permitted Phases	4			4			2			6		
Actuated Green, G (s)		19.3			19.3		58.7	58.7		58.7	58.7	
Effective Green, g (s)		18.8			18.8		58.2	58.2		58.2	58.2	
Actuated g/C Ratio		0.22			0.22		0.68	0.68		0.68	0.68	
Clearance Time (s)		3.5			3.5		3.5	3.5		3.5	3.5	
Vehicle Extension (s)		2.0			2.0		2.0	2.0		2.0	2.0	
Lane Grp Cap (vph)		241			300		349	2368		405	2364	
v/s Ratio Prot								0.22			0.26	
v/s Ratio Perm		c0.21			0.13		c0.29			0.07		
v/c Ratio		0.93			0.60		0.42	0.32		0.11	0.38	
Uniform Delay, d1		32.4			29.8		5.9	5.4		4.6	5.7	
Progression Factor		1.00			1.00		1.00	1.00		1.00	1.00	
Incremental Delay, d2		38.0			2.3		3.7	0.4		0.5	0.5	
Delay (s)		70.5			32.1		9.6	5.8		5.1	6.2	
Level of Service		E			C		A	A		A	A	
Approach Delay (s)		70.5			32.1			6.4			6.1	
Approach LOS		E			C			A			A	

Intersection Summary			
HCM Average Control Delay	15.3	HCM Level of Service	B
HCM Volume to Capacity ratio	0.55		
Actuated Cycle Length (s)	85.0	Sum of lost time (s)	8.0
Intersection Capacity Utilization	64.9%	ICU Level of Service	C
Analysis Period (min)	15		

c Critical Lane Group

Movement	EBL	EBT	EBR	WBL	WBT	WBR	NBL	NBT	NBR	SBL	SBT	SBR
Lane Configurations												
Ideal Flow (vphpl)	1900	1900	1900	1900	1900	1900	1900	1900	1900	1900	1900	1900
Total Lost time (s)	4.0	4.0		4.0	4.0		4.0	4.0		4.0	4.0	
Lane Util. Factor	1.00	0.95		1.00	0.95		1.00	0.95		1.00	0.95	
Frpb, ped/bikes	1.00	0.97		1.00	0.94		1.00	0.99		1.00	0.94	
Flpb, ped/bikes	1.00	1.00		1.00	1.00		0.96	1.00		0.97	1.00	
Frt	1.00	0.97		1.00	0.95		1.00	0.99		1.00	0.94	
Flt Protected	0.95	1.00		0.95	1.00		0.95	1.00		0.95	1.00	
Satd. Flow (prot)	1770	3340		1770	3160		1697	3476		1716	3129	
Flt Permitted	0.95	1.00		0.95	1.00		0.27	1.00		0.32	1.00	
Satd. Flow (perm)	1770	3340		1770	3160		478	3476		571	3129	
Volume (vph)	140	420	110	70	440	194	170	660	50	120	514	300
Peak-hour factor, PHF	0.98	0.98	0.98	0.98	0.98	0.98	0.98	0.98	0.98	0.98	0.98	0.98
Adj. Flow (vph)	143	429	112	71	449	198	173	673	51	122	524	306
RTOR Reduction (vph)	0	27	0	0	61	0	0	6	0	0	91	0
Lane Group Flow (vph)	143	514	0	71	586	0	173	718	0	122	739	0
Confl. Peds. (#/hr)			100			100	100		100	100		100
Turn Type	Prot			Prot			Perm			Perm		
Protected Phases	7	4		3	8			2			6	
Permitted Phases							2			6		
Actuated Green, G (s)	9.5	22.5		6.7	19.7		42.3	42.3		42.3	42.3	
Effective Green, g (s)	10.0	22.0		7.2	19.2		43.8	43.8		43.8	43.8	
Actuated g/C Ratio	0.12	0.26		0.08	0.23		0.52	0.52		0.52	0.52	
Clearance Time (s)	4.5	3.5		4.5	3.5		5.5	5.5		5.5	5.5	
Vehicle Extension (s)	2.0	2.0		2.0	2.0		2.0	2.0		2.0	2.0	
Lane Grp Cap (vph)	208	864		150	714		246	1791		294	1612	
v/s Ratio Prot	c0.08	c0.15		0.04	c0.19			0.21			0.24	
v/s Ratio Perm							c0.36			0.21		
v/c Ratio	0.69	0.59		0.47	0.82		0.70	0.40		0.41	0.46	
Uniform Delay, d1	36.0	27.6		37.1	31.3		15.7	12.6		12.7	13.1	
Progression Factor	1.00	1.00		1.00	1.00		1.00	1.00		1.00	1.00	
Incremental Delay, d2	7.3	0.7		0.9	7.2		15.5	0.7		4.3	0.9	
Delay (s)	43.3	28.3		38.0	38.4		31.2	13.3		17.0	14.0	
Level of Service	D	C		D	D		C	B		B	B	
Approach Delay (s)		31.5			38.4			16.7			14.4	
Approach LOS		C			D			B			B	

Intersection Summary			
HCM Average Control Delay	23.9	HCM Level of Service	C
HCM Volume to Capacity ratio	0.76		
Actuated Cycle Length (s)	85.0	Sum of lost time (s)	16.0
Intersection Capacity Utilization	76.7%	ICU Level of Service	D
Analysis Period (min)	15		

c Critical Lane Group

Movement	EBL	EBR	NBL	NBT	SBT	SBR
Lane Configurations						
Ideal Flow (vphpl)	1900	1900	1900	1900	1900	1900
Total Lost time (s)	4.0		4.0	4.0	4.0	
Lane Util. Factor	1.00		1.00	0.95	0.95	
Frt	0.91		1.00	1.00	0.98	
Flt Protected	0.99		0.95	1.00	1.00	
Satd. Flow (prot)	1662		1770	3539	3459	
Flt Permitted	0.99		0.95	1.00	1.00	
Satd. Flow (perm)	1662		1770	3539	3459	
Volume (vph)	43	98	89	1515	702	124
Peak-hour factor, PHF	0.95	0.95	0.95	0.95	0.95	0.95
Adj. Flow (vph)	45	103	94	1595	739	131
RTOR Reduction (vph)	67	0	0	0	18	0
Lane Group Flow (vph)	81	0	94	1595	852	0
Turn Type			Prot			
Protected Phases	2		3	8	4	
Permitted Phases						
Actuated Green, G (s)	27.5		9.0	44.0	30.5	
Effective Green, g (s)	28.0		9.0	44.0	31.0	
Actuated g/C Ratio	0.35		0.11	0.55	0.39	
Clearance Time (s)	4.5		4.0	4.0	4.5	
Vehicle Extension (s)	3.0		3.0	3.0	3.0	
Lane Grp Cap (vph)	582		199	1946	1340	
v/s Ratio Prot	c0.05		0.05	c0.45	0.25	
v/s Ratio Perm						
v/c Ratio	0.14		0.47	0.82	0.64	
Uniform Delay, d1	17.8		33.3	14.7	19.9	
Progression Factor	1.00		1.00	1.00	0.50	
Incremental Delay, d2	0.5		7.8	4.0	1.7	
Delay (s)	18.3		41.1	18.8	11.6	
Level of Service	B		D	B	B	
Approach Delay (s)	18.3			20.0	11.6	
Approach LOS	B			B	B	

Intersection Summary			
HCM Average Control Delay	17.2	HCM Level of Service	B
HCM Volume to Capacity ratio	0.55		
Actuated Cycle Length (s)	80.0	Sum of lost time (s)	8.0
Intersection Capacity Utilization	57.0%	ICU Level of Service	B
Analysis Period (min)	15		

c Critical Lane Group

Movement	EBL	EBT	EBR	WBL	WBT	WBR	NBL	NBT	NBR	SBL	SBT	SBR
Lane Configurations												
Ideal Flow (vphpl)	1900	1900	1900	1900	1900	1900	1900	1900	1900	1900	1900	1900
Total Lost time (s)	4.0	4.0		4.0	4.0		4.0	4.0		4.0	4.0	
Lane Util. Factor	0.97	0.95		1.00	0.95		1.00	0.95		1.00	0.95	
Frpb, ped/bikes	1.00	0.99		1.00	0.99		1.00	0.97		1.00	0.98	
Flpb, ped/bikes	1.00	1.00		1.00	1.00		1.00	1.00		1.00	1.00	
Frt	1.00	0.99		1.00	0.95		1.00	0.97		1.00	0.99	
Flt Protected	0.95	1.00		0.95	1.00		0.95	1.00		0.95	1.00	
Satd. Flow (prot)	3433	3456		1770	3308		1770	3322		1770	3414	
Flt Permitted	0.95	1.00		0.95	1.00		0.95	1.00		0.95	1.00	
Satd. Flow (perm)	3433	3456		1770	3308		1770	3322		1770	3414	
Volume (vph)	460	880	82	120	510	290	90	898	260	220	684	60
Peak-hour factor, PHF	0.95	0.95	0.95	0.95	0.95	0.95	0.95	0.95	0.95	0.95	0.95	0.95
Adj. Flow (vph)	484	926	86	126	537	305	95	945	274	232	720	63
RTOR Reduction (vph)	0	7	0	0	79	0	0	27	0	0	6	0
Lane Group Flow (vph)	484	1005	0	126	763	0	95	1192	0	232	777	0
Confl. Peds. (#/hr)	15		48	48		15	123		48	48		123
Turn Type	Prot			Prot			Prot			Prot		
Protected Phases	7	4		3	8		5	2		1	6	
Permitted Phases												
Actuated Green, G (s)	15.5	28.5		9.0	22.0		8.3	33.5		12.0	37.2	
Effective Green, g (s)	15.0	29.5		8.5	23.0		7.8	34.5		11.5	38.2	
Actuated g/C Ratio	0.15	0.29		0.08	0.23		0.08	0.34		0.12	0.38	
Clearance Time (s)	3.5	5.0		3.5	5.0		3.5	5.0		3.5	5.0	
Vehicle Extension (s)	2.0	2.0		2.0	2.0		2.0	2.0		2.0	2.0	
Lane Grp Cap (vph)	515	1020		150	761		138	1146		204	1304	
v/s Ratio Prot	c0.14	c0.29		0.07	0.23		0.05	c0.36		c0.13	c0.23	
v/s Ratio Perm												
v/c Ratio	0.94	0.99		0.84	1.00		0.69	1.04		1.14	0.60	
Uniform Delay, d1	42.1	35.0		45.1	38.5		44.9	32.8		44.2	24.7	
Progression Factor	1.00	1.00		1.00	1.00		1.00	1.00		1.14	0.71	
Incremental Delay, d2	24.9	24.3		30.7	33.2		10.8	37.6		98.6	1.6	
Delay (s)	66.9	59.4		75.7	71.7		55.7	70.4		148.9	19.2	
Level of Service	E	E		E	E		E	E		F	B	
Approach Delay (s)		61.8			72.2			69.3			48.9	
Approach LOS		E			E			E			D	

Intersection Summary			
HCM Average Control Delay	63.2	HCM Level of Service	E
HCM Volume to Capacity ratio	1.03		
Actuated Cycle Length (s)	100.0	Sum of lost time (s)	16.0
Intersection Capacity Utilization	96.6%	ICU Level of Service	F
Analysis Period (min)	15		

c Critical Lane Group

Movement	EBL	EBT	EBR	WBL	WBT	WBR	NBL	NBT	NBR	SBL	SBT	SBR
Lane Configurations												
Ideal Flow (vphpl)	1900	1900	1900	1900	1900	1900	1900	1900	1900	1900	1900	1900
Total Lost time (s)		4.0		4.0	4.0			4.0		4.0	4.0	
Lane Util. Factor		0.91		1.00	0.95			1.00		1.00	1.00	
Frpb, ped/bikes		1.00		1.00	0.99			1.00		1.00	0.99	
Flpb, ped/bikes		1.00		1.00	1.00			1.00		1.00	1.00	
Frt		0.99		1.00	0.96			0.98		1.00	0.98	
Flt Protected		0.99		0.95	1.00			0.99		0.95	1.00	
Satd. Flow (prot)		5018		1768	3395			1793		1763	1801	
Flt Permitted		0.71		0.28	1.00			0.81		0.32	1.00	
Satd. Flow (perm)		3610		528	3395			1456		599	1801	
Volume (vph)	110	700	30	91	660	201	80	375	90	70	273	50
Peak-hour factor, PHF	0.98	0.98	0.98	0.98	0.98	0.98	0.98	0.98	0.98	0.98	0.98	0.98
Adj. Flow (vph)	112	714	31	93	673	205	82	383	92	71	279	51
RTOR Reduction (vph)	0	4	0	0	32	0	0	8	0	0	7	0
Lane Group Flow (vph)	0	853	0	93	846	0	0	549	0	71	323	0
Confl. Peds. (#/hr)	24		4	4		24	48		12	12		48
Turn Type	Perm			Perm			Perm			Perm		
Protected Phases		4			8			2			6	
Permitted Phases	4			8			2			6		
Actuated Green, G (s)		46.0		46.0	46.0			34.0		34.0	34.0	
Effective Green, g (s)		47.0		47.0	47.0			35.0		35.0	35.0	
Actuated g/C Ratio		0.52		0.52	0.52			0.39		0.39	0.39	
Clearance Time (s)		5.0		5.0	5.0			5.0		5.0	5.0	
Lane Grp Cap (vph)		1885		276	1773			566		233	700	
v/s Ratio Prot					c0.25						0.18	
v/s Ratio Perm		0.24		0.18				c0.38		0.12		
v/c Ratio		0.45		0.34	0.48			0.97		0.30	0.46	
Uniform Delay, d1		13.4		12.5	13.7			27.0		19.1	20.5	
Progression Factor		1.00		1.00	1.00			1.00		1.00	1.00	
Incremental Delay, d2		0.8		3.3	0.9			31.1		3.3	2.2	
Delay (s)		14.2		15.7	14.6			58.1		22.4	22.7	
Level of Service		B		B	B			E		C	C	
Approach Delay (s)		14.2			14.7			58.1			22.6	
Approach LOS		B			B			E			C	

Intersection Summary			
HCM Average Control Delay	24.4	HCM Level of Service	C
HCM Volume to Capacity ratio	0.69		
Actuated Cycle Length (s)	90.0	Sum of lost time (s)	8.0
Intersection Capacity Utilization	139.8%	ICU Level of Service	H
Analysis Period (min)	15		

c Critical Lane Group

APPENDIX G:
YEAR 2030 NO PROJCT CONDITIONS INTERSECTION LEVEL OF SERVICE CALCULATION WORKSHEETS

Movement	EBL	EBT	EBR	WBL	WBT	WBR	NBL	NBT	NBR	SBL	SBT	SBR
Lane Configurations												
Ideal Flow (vphpl)	1900	1900	1900	1900	1900	1900	1900	1900	1900	1900	1900	1900
Lane Width	12	12	12	12	12	12	16	16	16	16	16	16
Total Lost time (s)	4.0	4.0		4.0	4.0		2.0	2.0		2.0	2.0	
Lane Util. Factor	1.00	0.91		1.00	0.91		1.00	1.00		1.00	1.00	
Frpb, ped/bikes	1.00	0.99		1.00	0.99		1.00	0.99		1.00	0.98	
Flpb, ped/bikes	1.00	1.00		1.00	1.00		1.00	1.00		0.99	1.00	
Frt	1.00	0.97		1.00	0.98		1.00	0.97		1.00	0.94	
Flt Protected	0.95	1.00		0.95	1.00		0.95	1.00		0.95	1.00	
Satd. Flow (prot)	1770	4903		1770	4953		2006	2034		1986	1950	
Flt Permitted	0.95	1.00		0.95	1.00		0.10	1.00		0.43	1.00	
Satd. Flow (perm)	1770	4903		1770	4953		201	2034		899	1950	
Volume (vph)	310	1000	220	120	1660	250	200	290	70	180	420	290
Peak-hour factor, PHF	0.95	0.95	0.95	0.95	0.95	0.95	0.95	0.95	0.95	0.95	0.95	0.95
Adj. Flow (vph)	326	1053	232	126	1747	263	211	305	74	189	442	305
RTOR Reduction (vph)	0	28	0	0	16	0	0	7	0	0	21	0
Lane Group Flow (vph)	326	1257	0	126	1994	0	211	372	0	189	726	0
Confl. Peds. (#/hr)			10	10		10	10		10	10		10
Turn Type	Prot			Prot			pm pt			Perm		
Protected Phases	7	4		3	8		5	2			6	
Permitted Phases							2			6		
Actuated Green, G (s)	17.0	47.9		13.1	44.0		48.5	48.5		39.5	39.5	
Effective Green, g (s)	17.0	47.9		13.1	44.0		49.0	49.0		40.0	40.0	
Actuated g/C Ratio	0.14	0.40		0.11	0.37		0.41	0.41		0.33	0.33	
Clearance Time (s)	4.0	4.0		4.0	4.0		4.0	2.5		2.5	2.5	
Vehicle Extension (s)	3.0	3.0		3.0	3.0		3.0	3.0		3.0	3.0	
Lane Grp Cap (vph)	251	1957		193	1816		187	831		300	650	
v/s Ratio Prot	c0.18	c0.26		0.07	c0.40		c0.07	0.18			c0.37	
v/s Ratio Perm							0.39			0.21		
v/c Ratio	1.30	0.64		0.65	1.10		1.13	0.45		0.63	1.12	
Uniform Delay, d1	51.5	29.1		51.3	38.0		58.7	25.7		33.8	40.0	
Progression Factor	1.00	1.00		1.00	1.00		1.00	1.00		1.00	1.00	
Incremental Delay, d2	160.6	1.6		7.7	53.2		104.5	0.4		4.3	72.1	
Delay (s)	212.1	30.8		59.0	91.2		163.2	26.1		38.0	112.1	
Level of Service	F	C		E	F		F	C		D	F	
Approach Delay (s)		67.4			89.3			75.1			97.2	
Approach LOS		E			F			E			F	

Intersection Summary			
HCM Average Control Delay	82.4	HCM Level of Service	F
HCM Volume to Capacity ratio	1.15		
Actuated Cycle Length (s)	120.0	Sum of lost time (s)	16.0
Intersection Capacity Utilization	119.6%	ICU Level of Service	H
Analysis Period (min)	15		
c Critical Lane Group			

Movement	EBL	EBT	EBR	WBL	WBT	WBR	NBL	NBT	NBR	SBL	SBT	SBR
Lane Configurations												
Ideal Flow (vphpl)	1900	1900	1900	1900	1900	1900	1900	1900	1900	1900	1900	1900
Total Lost time (s)		4.0		4.0	4.0			4.0		4.0	4.0	
Lane Util. Factor		1.00		0.95	0.95			0.95		1.00	0.95	
Frpb, ped/bikes		1.00		1.00	0.99			0.99		1.00	0.97	
Flpb, ped/bikes		1.00		1.00	1.00			1.00		1.00	1.00	
Frt		0.95		1.00	0.91			0.97		1.00	0.96	
Flt Protected		0.98		0.95	1.00			1.00		0.95	1.00	
Satd. Flow (prot)		1749		1681	1597			3418		1770	3290	
Flt Permitted		0.48		0.74	1.00			0.74		0.95	1.00	
Satd. Flow (perm)		847		1302	1597			2535		1770	3290	
Volume (vph)	10	10	10	350	330	470	10	1150	240	110	1320	460
Peak-hour factor, PHF	0.95	0.95	0.95	0.95	0.95	0.95	0.95	0.95	0.95	0.95	0.95	0.95
Adj. Flow (vph)	11	11	11	368	347	495	11	1211	253	116	1389	484
RTOR Reduction (vph)	0	10	0	0	57	0	0	18	0	0	36	0
Lane Group Flow (vph)	0	23	0	368	785	0	0	1457	0	116	1837	0
Confl. Peds. (#/hr)	4					4	44		12	12		44
Turn Type	Perm			Perm			Perm			Prot		
Protected Phases		7			8			2		1	6	
Permitted Phases	7			8			2					
Actuated Green, G (s)		5.1		26.5	26.5			32.5		7.9	44.9	
Effective Green, g (s)		5.6		27.0	27.0			33.0		8.4	45.4	
Actuated g/C Ratio		0.06		0.30	0.30			0.37		0.09	0.50	
Clearance Time (s)		4.5		4.5	4.5			4.5		4.5	4.5	
Vehicle Extension (s)		2.0		2.0	2.0			2.0		2.0	2.0	
Lane Grp Cap (vph)		53		391	479			930		165	1660	
v/s Ratio Prot										0.07	c0.56	
v/s Ratio Perm		c0.03		0.28	0.49			c0.57				
v/c Ratio		0.43		0.94	1.64			1.57		0.70	1.11	
Uniform Delay, d1		40.7		30.7	31.5			28.5		39.6	22.3	
Progression Factor		1.00		1.00	1.00			0.99		1.00	1.00	
Incremental Delay, d2		2.0		30.5	296.4			256.6		10.5	57.5	
Delay (s)		42.7		61.2	327.9			284.9		50.1	79.8	
Level of Service		D		E	F			F		D	E	
Approach Delay (s)		42.7			246.8			284.9			78.0	
Approach LOS		D			F			F			E	

Intersection Summary			
HCM Average Control Delay	186.0	HCM Level of Service	F
HCM Volume to Capacity ratio	1.48		
Actuated Cycle Length (s)	90.0	Sum of lost time (s)	16.0
Intersection Capacity Utilization	137.7%	ICU Level of Service	H
Analysis Period (min)	15		
c Critical Lane Group			

Movement	EBL	EBT	EBR	WBL	WBT	WBR	NBL	NBT	NBR	SBL	SBT	SBR
Lane Configurations												
Ideal Flow (vphpl)	1900	1900	1900	1900	1900	1900	1900	1900	1900	1900	1900	1900
Total Lost time (s)	4.0	4.0		4.0	4.0		4.0	4.0		4.0	4.0	
Lane Util. Factor	0.97	0.95		1.00	0.95		1.00	0.95		1.00	0.95	
Frpb, ped/bikes	1.00	0.99		1.00	0.99		1.00	0.99		1.00	0.99	
Flpb, ped/bikes	1.00	1.00		1.00	1.00		1.00	1.00		1.00	1.00	
Frt	1.00	0.98		1.00	0.96		1.00	0.97		1.00	0.98	
Flt Protected	0.95	1.00		0.95	1.00		0.95	1.00		0.95	1.00	
Satd. Flow (prot)	3433	3428		1770	3372		1770	3417		1770	3403	
Flt Permitted	0.95	1.00		0.95	1.00		0.95	1.00		0.95	1.00	
Satd. Flow (perm)	3433	3428		1770	3372		1770	3417		1770	3403	
Volume (vph)	460	650	110	140	820	320	120	650	140	320	1150	220
Peak-hour factor, PHF	0.96	0.96	0.96	0.96	0.96	0.96	0.96	0.96	0.96	0.96	0.96	0.96
Adj. Flow (vph)	479	677	115	146	854	333	125	677	146	333	1198	229
RTOR Reduction (vph)	0	15	0	0	46	0	0	20	0	0	17	0
Lane Group Flow (vph)	479	777	0	146	1141	0	125	803	0	333	1410	0
Confl. Peds. (#/hr)	6		24	24		6	36		28	28		36
Turn Type	Prot			Prot			Prot			Prot		
Protected Phases	7	4		3	8		5	2		1	6	
Permitted Phases												
Actuated Green, G (s)	13.0	28.4		10.1	25.5		9.6	23.5		11.0	24.9	
Effective Green, g (s)	12.5	29.4		9.6	26.5		9.1	24.5		10.5	25.9	
Actuated g/C Ratio	0.14	0.33		0.11	0.29		0.10	0.27		0.12	0.29	
Clearance Time (s)	3.5	5.0		3.5	5.0		3.5	5.0		3.5	5.0	
Vehicle Extension (s)	2.0	2.0		2.0	2.0		2.0	2.0		2.0	2.0	
Lane Grp Cap (vph)	477	1120		189	993		179	930		207	979	
v/s Ratio Prot	c0.14	c0.23		0.08	c0.34		0.07	0.23		c0.19	c0.41	
v/s Ratio Perm												
v/c Ratio	1.00	0.69		0.77	1.15		0.70	0.86		1.61	1.44	
Uniform Delay, d1	38.8	26.4		39.1	31.8		39.1	31.2		39.8	32.0	
Progression Factor	1.00	1.00		1.00	1.00		1.00	1.00		1.19	0.86	
Incremental Delay, d2	42.2	1.5		16.2	79.0		9.2	10.4		276.0	198.6	
Delay (s)	81.0	27.9		55.3	110.7		48.3	41.6		323.2	226.2	
Level of Service	F	C		E	F		D	D		F	F	
Approach Delay (s)		47.9			104.7			42.5			244.5	
Approach LOS		D			F			D			F	

Intersection Summary			
HCM Average Control Delay	126.3	HCM Level of Service	F
HCM Volume to Capacity ratio	1.30		
Actuated Cycle Length (s)	90.0	Sum of lost time (s)	16.0
Intersection Capacity Utilization	105.5%	ICU Level of Service	G
Analysis Period (min)	15		

c Critical Lane Group

Movement	EBL	EBT	EBR	WBL	WBT	WBR	NBL	NBT	NBR	SBL	SBT	SBR
Lane Configurations												
Ideal Flow (vphpl)	1900	1900	1900	1900	1900	1900	1900	1900	1900	1900	1900	1900
Total Lost time (s)		4.0						4.0		4.0	4.0	
Lane Util. Factor		1.00						0.95		0.97	0.95	
Frt		0.86						0.93		1.00	0.99	
Flt Protected		1.00						1.00		0.95	1.00	
Satd. Flow (prot)		1611						3291		3433	3495	
Flt Permitted		1.00						0.94		0.95	1.00	
Satd. Flow (perm)		1611						3080		3433	3495	
Volume (vph)	0	0	10	0	0	0	10	360	320	1600	660	60
Peak-hour factor, PHF	0.95	0.95	0.95	0.95	0.95	0.95	0.95	0.95	0.95	0.95	0.95	0.95
Adj. Flow (vph)	0	0	11	0	0	0	11	379	337	1684	695	63
RTOR Reduction (vph)	0	11	0	0	0	0	0	26	0	0	0	0
Lane Group Flow (vph)	0	0	0	0	0	0	0	701	0	1684	758	0
Turn Type										Prot		
Protected Phases								2		1	6	
Permitted Phases												
Actuated Green, G (s)		0.0						8.0		29.0	45.0	
Effective Green, g (s)		0.0						8.0		29.0	45.0	
Actuated g/C Ratio		0.00						0.18		0.64	1.00	
Clearance Time (s)								4.0		4.0	2.0	
Lane Grp Cap (vph)		0						548		2212	3495	
v/s Ratio Prot										c0.49	0.22	
v/s Ratio Perm								c0.23				
v/c Ratio		0.00						10.53dr		0.76	0.22	
Uniform Delay, d1		22.5						18.5		5.6	0.0	
Progression Factor		1.00						0.80		1.00	1.00	
Incremental Delay, d2		0.0						138.0		2.5	0.1	
Delay (s)		22.5						152.7		8.1	0.1	
Level of Service		C						F		A	A	
Approach Delay (s)		22.5			0.0			152.7			5.6	
Approach LOS		C			A			F			A	

Intersection Summary			
HCM Average Control Delay	39.3	HCM Level of Service	D
HCM Volume to Capacity ratio	0.87		
Actuated Cycle Length (s)	45.0	Sum of lost time (s)	8.0
Intersection Capacity Utilization	79.5%	ICU Level of Service	D
Analysis Period (min)	15		

dr Defacto Right Lane. Recode with 1 though lane as a right lane.
c Critical Lane Group

Movement	EBL	EBT	EBR	WBL	WBT	WBR	NBL	NBT	NBR	SBL	SBT	SBR
Lane Configurations												
Ideal Flow (vphpl)	1900	1900	1900	1900	1900	1900	1900	1900	1900	1900	1900	1900
Total Lost time (s)		4.0			4.0			4.0			4.0	
Lane Util. Factor		1.00			1.00			0.95			0.95	
Frpb, ped/bikes		0.98			0.95			0.98			0.99	
Flpb, ped/bikes		0.98			0.98			1.00			1.00	
Frt		0.98			0.94			0.98			0.99	
Flt Protected		0.98			0.99			1.00			1.00	
Satd. Flow (prot)		1712			1606			3382			3475	
Flt Permitted		0.83			0.88			0.87			0.88	
Satd. Flow (perm)		1456			1427			2941			3066	
Volume (vph)	80	100	30	60	70	110	40	480	90	60	790	40
Peak-hour factor, PHF	0.95	0.95	0.95	0.95	0.95	0.95	0.95	0.95	0.95	0.95	0.95	0.95
Adj. Flow (vph)	84	105	32	63	74	116	42	505	95	63	832	42
RTOR Reduction (vph)	0	13	0	0	68	0	0	31	0	0	8	0
Lane Group Flow (vph)	0	208	0	0	185	0	0	611	0	0	929	0
Confl. Peds. (#/hr)	100		100	100		100	100		100	100		100
Turn Type	Perm			Perm			Perm			Perm		
Protected Phases		4			8			2			6	
Permitted Phases	4			8			2			6		
Actuated Green, G (s)		15.0			15.0			22.0			22.0	
Effective Green, g (s)		15.0			15.0			22.0			22.0	
Actuated g/C Ratio		0.33			0.33			0.49			0.49	
Clearance Time (s)		4.0			4.0			4.0			4.0	
Lane Grp Cap (vph)		485			476			1438			1499	
v/s Ratio Prot												
v/s Ratio Perm		c0.14			0.13			0.21			c0.30	
v/c Ratio		0.43			0.39			0.42			0.62	
Uniform Delay, d1		11.7			11.5			7.4			8.4	
Progression Factor		1.00			1.00			1.00			1.00	
Incremental Delay, d2		2.7			2.4			0.9			1.9	
Delay (s)		14.4			13.9			8.3			10.4	
Level of Service		B			B			A			B	
Approach Delay (s)		14.4			13.9			8.3			10.4	
Approach LOS		B			B			A			B	

Intersection Summary			
HCM Average Control Delay	10.6	HCM Level of Service	B
HCM Volume to Capacity ratio	0.54		
Actuated Cycle Length (s)	45.0	Sum of lost time (s)	8.0
Intersection Capacity Utilization	72.7%	ICU Level of Service	C
Analysis Period (min)	15		

c Critical Lane Group

Movement	EBL	EBT	EBR	WBL	WBT	WBR	NBL	NBT	NBR	SBL	SBT	SBR
Lane Configurations												
Ideal Flow (vphpl)	1900	1900	1900	1900	1900	1900	1900	1900	1900	1900	1900	1900
Total Lost time (s)		4.0			4.0			4.0			4.0	
Lane Util. Factor		1.00			1.00			0.95			0.91	
Frpb, ped/bikes		0.96			0.95			0.98			0.98	
Flpb, ped/bikes		0.98			0.98			1.00			1.00	
Frt		0.96			0.95			0.99			0.99	
Flt Protected		0.98			0.99			1.00			1.00	
Satd. Flow (prot)		1639			1645			3432			4956	
Flt Permitted		0.76			0.82			0.76			0.81	
Satd. Flow (perm)		1261			1363			2613			4002	
Volume (vph)	80	100	80	50	90	70	40	1030	70	80	1900	100
Peak-hour factor, PHF	0.95	0.95	0.95	0.95	0.95	0.95	0.95	0.95	0.95	0.95	0.95	0.95
Adj. Flow (vph)	84	105	84	53	95	74	42	1084	74	84	2000	105
RTOR Reduction (vph)	0	2	0	0	27	0	0	4	0	0	4	0
Lane Group Flow (vph)	0	271	0	0	195	0	0	1196	0	0	2185	0
Confl. Peds. (#/hr)	100		100	100		100	100		100	100		100
Turn Type	Perm			Perm			Perm			Perm		
Protected Phases		4			4			2			6	
Permitted Phases	4			4			2			6		
Actuated Green, G (s)		19.4			19.4			56.6			56.6	
Effective Green, g (s)		19.9			19.9			57.1			57.1	
Actuated g/C Ratio		0.23			0.23			0.67			0.67	
Clearance Time (s)		4.5			4.5			4.5			4.5	
Vehicle Extension (s)		2.0			2.0			2.0			2.0	
Lane Grp Cap (vph)		295			319			1755			2688	
v/s Ratio Prot												
v/s Ratio Perm		c0.22			0.14			0.46			c0.55	
v/c Ratio		0.92			0.61			0.68			0.81	
Uniform Delay, d1		31.8			29.1			8.4			10.1	
Progression Factor		1.00			1.00			1.00			1.00	
Incremental Delay, d2		31.9			2.4			2.2			2.8	
Delay (s)		63.7			31.5			10.6			12.9	
Level of Service		E			C			B			B	
Approach Delay (s)		63.7			31.5			10.6			12.9	
Approach LOS		E			C			B			B	

Intersection Summary			
HCM Average Control Delay	16.8	HCM Level of Service	B
HCM Volume to Capacity ratio	0.84		
Actuated Cycle Length (s)	85.0	Sum of lost time (s)	8.0
Intersection Capacity Utilization	110.8%	ICU Level of Service	H
Analysis Period (min)	15		

c Critical Lane Group

Movement	EBL	EBT	EBR	WBL	WBT	WBR	NBL	NBT	NBR	SBL	SBT	SBR
Lane Configurations												
Ideal Flow (vphpl)	1900	1900	1900	1900	1900	1900	1900	1900	1900	1900	1900	1900
Total Lost time (s)	4.0	4.0		4.0	4.0		4.0	4.0		4.0	4.0	
Lane Util. Factor	1.00	0.95		1.00	0.95		1.00	1.00		1.00	1.00	
Frpb, ped/bikes	1.00	0.99		1.00	0.99		1.00	1.00		1.00	1.00	
Flpb, ped/bikes	1.00	1.00		1.00	1.00		1.00	1.00		0.99	1.00	
Frt	1.00	0.96		1.00	0.98		1.00	0.99		1.00	0.98	
Flt Protected	0.95	1.00		0.95	1.00		0.95	1.00		0.95	1.00	
Satd. Flow (prot)	1770	3370		1763	3455		1768	1837		1745	1815	
Flt Permitted	0.17	1.00		0.19	1.00		0.24	1.00		0.45	1.00	
Satd. Flow (perm)	324	3370		353	3455		449	1837		828	1815	
Volume (vph)	180	500	190	90	920	110	160	380	30	200	600	110
Peak-hour factor, PHF	0.95	0.95	0.95	0.95	0.95	0.95	0.95	0.95	0.95	0.95	0.95	0.95
Adj. Flow (vph)	189	526	200	95	968	116	168	400	32	211	632	116
RTOR Reduction (vph)	0	49	0	0	11	0	0	3	0	0	3	0
Lane Group Flow (vph)	189	677	0	95	1073	0	168	429	0	211	745	0
Confl. Peds. (#/hr)	30		12	12		30	6		54	54		6
Turn Type	Perm			Perm			Perm			Perm		
Protected Phases		4			8			2			6	
Permitted Phases	4			8			2			6		
Actuated Green, G (s)	24.0	24.0		24.0	24.0		49.5	49.5		49.5	49.5	
Effective Green, g (s)	23.0	23.0		23.0	23.0		49.0	49.0		49.0	49.0	
Actuated g/C Ratio	0.29	0.29		0.29	0.29		0.61	0.61		0.61	0.61	
Clearance Time (s)	3.0	3.0		3.0	3.0		3.5	3.5		3.5	3.5	
Lane Grp Cap (vph)	93	969		101	993		275	1125		507	1112	
v/s Ratio Prot		0.20			0.31			0.23			c0.41	
v/s Ratio Perm	c0.58			0.27			0.37			0.25		
v/c Ratio	2.03	0.70		0.94	1.08		0.61	0.38		0.42	0.67	
Uniform Delay, d1	28.5	25.4		27.8	28.5		9.6	7.8		8.1	10.2	
Progression Factor	1.00	1.00		0.88	0.90		1.00	1.00		1.00	1.00	
Incremental Delay, d2	499.9	4.2		65.2	50.1		9.7	1.0		2.5	3.2	
Delay (s)	528.4	29.6		89.8	75.7		19.3	8.8		10.6	13.4	
Level of Service	F	C		F	E		B	A		B	B	
Approach Delay (s)		132.6			76.8			11.8			12.8	
Approach LOS		F			E			B			B	

Intersection Summary			
HCM Average Control Delay	63.3	HCM Level of Service	E
HCM Volume to Capacity ratio	1.10		
Actuated Cycle Length (s)	80.0	Sum of lost time (s)	8.0
Intersection Capacity Utilization	103.6%	ICU Level of Service	G
Analysis Period (min)	15		
c Critical Lane Group			

Movement	EBL	EBT	EBR	WBL	WBT	WBR	NBL	NBT	NBR	SBL	SBT	SBR
Lane Configurations												
Ideal Flow (vphpl)	1900	1900	1900	1900	1900	1900	1900	1900	1900	1900	1900	1900
Total Lost time (s)	4.0	4.0		4.0	4.0			4.0			4.0	
Lane Util. Factor	1.00	0.95		1.00	0.95			0.95			0.95	
Frpb, ped/bikes	1.00	0.99		1.00	1.00			1.00			1.00	
Flpb, ped/bikes	1.00	1.00		0.99	1.00			1.00			1.00	
Frt	1.00	0.97		1.00	0.99			0.98			0.98	
Flt Protected	0.95	1.00		0.95	1.00			0.99			0.99	
Satd. Flow (prot)	1766	3407		1748	3496			3403			3427	
Flt Permitted	0.17	1.00		0.31	1.00			0.65			0.71	
Satd. Flow (perm)	314	3407		576	3496			2241			2472	
Volume (vph)	80	550	130	60	940	70	120	280	70	120	380	70
Peak-hour factor, PHF	0.95	0.95	0.95	0.95	0.95	0.95	0.95	0.95	0.95	0.95	0.95	0.95
Adj. Flow (vph)	84	579	137	63	989	74	126	295	74	126	400	74
RTOR Reduction (vph)	0	26	0	0	7	0	0	18	0	0	14	0
Lane Group Flow (vph)	84	690	0	63	1056	0	0	477	0	0	586	0
Confl. Peds. (#/hr)	18		54	54		18	4		18	18		4
Turn Type	Perm			Perm			Perm			Perm		
Protected Phases		4			8			2			6	
Permitted Phases	4			8			2			6		
Actuated Green, G (s)	38.0	38.0		38.0	38.0			32.0			32.0	
Effective Green, g (s)	39.0	39.0		39.0	39.0			33.0			33.0	
Actuated g/C Ratio	0.49	0.49		0.49	0.49			0.41			0.41	
Clearance Time (s)	5.0	5.0		5.0	5.0			5.0			5.0	
Lane Grp Cap (vph)	153	1661		281	1704			924			1020	
v/s Ratio Prot		0.20			c0.30							
v/s Ratio Perm	0.27			0.11				0.21			c0.24	
v/c Ratio	0.55	0.42		0.22	0.62			0.52			0.57	
Uniform Delay, d1	14.3	13.2		11.8	15.1			17.5			18.1	
Progression Factor	0.98	0.91		1.35	1.45			0.57			1.00	
Incremental Delay, d2	11.0	0.6		1.5	1.4			1.4			2.4	
Delay (s)	25.0	12.6		17.4	23.2			11.4			20.5	
Level of Service	C	B		B	C			B			C	
Approach Delay (s)		13.9			22.9			11.4			20.5	
Approach LOS		B			C			B			C	

Intersection Summary			
HCM Average Control Delay	18.1	HCM Level of Service	B
HCM Volume to Capacity ratio	0.60		
Actuated Cycle Length (s)	80.0	Sum of lost time (s)	8.0
Intersection Capacity Utilization	77.8%	ICU Level of Service	D
Analysis Period (min)	15		
c Critical Lane Group			

Movement	EBL	EBT	EBR	WBL	WBT	WBR	NBL	NBT	NBR	SBL	SBT	SBR
Lane Configurations												
Ideal Flow (vphpl)	1900	1900	1900	1900	1900	1900	1900	1900	1900	1900	1900	1900
Total Lost time (s)	4.0	4.0		4.0	4.0			4.0			4.0	
Lane Util. Factor	1.00	0.95		1.00	0.95			0.95			0.95	
Frpb, ped/bikes	1.00	1.00		1.00	1.00			0.99			1.00	
Flpb, ped/bikes	1.00	1.00		0.99	1.00			1.00			1.00	
Frt	1.00	0.99		1.00	0.99			0.97			0.98	
Flt Protected	0.95	1.00		0.95	1.00			0.99			0.99	
Satd. Flow (prot)	1765	3498		1745	3481			3390			3424	
Flt Permitted	0.19	1.00		0.31	1.00			0.80			0.72	
Satd. Flow (perm)	348	3498		577	3481			2722			2504	
Volume (vph)	50	660	40	90	910	90	50	270	80	150	470	80
Peak-hour factor, PHF	0.96	0.96	0.96	0.96	0.96	0.96	0.96	0.96	0.96	0.96	0.96	0.96
Adj. Flow (vph)	52	688	42	94	948	94	52	281	83	156	490	83
RTOR Reduction (vph)	0	5	0	0	9	0	0	28	0	0	12	0
Lane Group Flow (vph)	52	725	0	94	1033	0	0	388	0	0	717	0
Confl. Peds. (#/hr)	13		71	71		13	22		22	22		22
Turn Type	Perm			Perm			Perm			Perm		
Protected Phases		4			8			2			6	
Permitted Phases	4			8			2			6		
Actuated Green, G (s)	41.5	41.5		41.5	41.5			32.0			32.0	
Effective Green, g (s)	41.0	41.0		41.0	41.0			31.0			31.0	
Actuated g/C Ratio	0.51	0.51		0.51	0.51			0.39			0.39	
Clearance Time (s)	3.5	3.5		3.5	3.5			3.0			3.0	
Lane Grp Cap (vph)	178	1793		296	1784			1055			970	
v/s Ratio Prot		0.21			c0.30							
v/s Ratio Perm	0.15			0.16				0.14			c0.29	
v/c Ratio	0.29	0.40		0.32	0.58			0.37			0.74	
Uniform Delay, d1	11.2	12.0		11.4	13.5			17.5			21.0	
Progression Factor	1.19	1.20		1.00	1.00			0.66			1.00	
Incremental Delay, d2	3.7	0.6		2.8	1.4			0.9			5.0	
Delay (s)	17.0	15.0		14.2	14.9			12.6			26.1	
Level of Service	B	B		B	B			B			C	
Approach Delay (s)		15.2			14.8			12.6			26.1	
Approach LOS		B			B			B			C	

Intersection Summary			
HCM Average Control Delay	17.3	HCM Level of Service	B
HCM Volume to Capacity ratio	0.65		
Actuated Cycle Length (s)	80.0	Sum of lost time (s)	8.0
Intersection Capacity Utilization	101.7%	ICU Level of Service	G
Analysis Period (min)	15		
c Critical Lane Group			

Movement	EBT	EBR	WBL	WBT	NBL	NBR
Lane Configurations						
Ideal Flow (vphpl)	1900	1900	1900	1900	1900	1900
Total Lost time (s)	4.0		4.0	4.0		
Lane Util. Factor	0.95		1.00	0.95		
Frpb, ped/bikes	0.98		1.00	1.00		
Flpb, ped/bikes	1.00		1.00	1.00		
Frt	0.99		1.00	1.00		
Flt Protected	1.00		0.95	1.00		
Satd. Flow (prot)	3433		1770	3539		
Flt Permitted	1.00		0.95	1.00		
Satd. Flow (perm)	3433		1770	3539		
Volume (vph)	810	60	100	1070	0	0
Peak-hour factor, PHF	0.95	0.95	0.95	0.95	0.95	0.95
Adj. Flow (vph)	853	63	105	1126	0	0
RTOR Reduction (vph)	9	0	0	0	0	0
Lane Group Flow (vph)	907	0	105	1126	0	0
Confl. Peds. (#/hr)		146	266			
Turn Type			Prot			
Protected Phases	4		3	8		
Permitted Phases						
Actuated Green, G (s)	22.0		30.0	60.0		
Effective Green, g (s)	22.0		30.0	60.0		
Actuated g/C Ratio	0.37		0.50	1.00		
Clearance Time (s)	4.0		4.0	4.0		
Lane Grp Cap (vph)	1259		885	3539		
v/s Ratio Prot	c0.26		0.06	c0.32		
v/s Ratio Perm						
v/c Ratio	0.72		0.12	0.32		
Uniform Delay, d1	16.4		8.0	0.0		
Progression Factor	1.00		1.00	1.00		
Incremental Delay, d2	3.6		0.3	0.2		
Delay (s)	19.9		8.2	0.2		
Level of Service	B		A	A		
Approach Delay (s)	19.9			0.9	0.0	
Approach LOS	B			A	A	

Intersection Summary			
HCM Average Control Delay	9.0	HCM Level of Service	A
HCM Volume to Capacity ratio	0.48		
Actuated Cycle Length (s)	60.0	Sum of lost time (s)	4.0
Intersection Capacity Utilization	37.0%	ICU Level of Service	A
Analysis Period (min)	15		
c Critical Lane Group			

Movement	EBT	EBR	WBL	WBT	NBL	NBR
Lane Configurations						
Sign Control	Free			Free	Stop	
Grade	0%			0%	0%	
Volume (veh/h)	790	20	0	1170	0	20
Peak Hour Factor	0.95	0.95	0.95	0.95	0.95	0.95
Hourly flow rate (vph)	832	21	0	1232	0	21
Pedestrians				123	123	
Lane Width (ft)				12.0	12.0	
Walking Speed (ft/s)				4.0	4.0	
Percent Blockage				10	10	
Right turn flare (veh)						
Median type					None	
Median storage veh)						
Upstream signal (ft)	81			406		
pX, platoon unblocked			0.77		0.88	0.77
vC, conflicting volume			976		1581	672
vC1, stage 1 conf vol						
vC2, stage 2 conf vol						
vCu, unblocked vol			677		819	285
tC, single (s)			4.1		6.8	6.9
tC, 2 stage (s)						
tF (s)			2.2		3.5	3.3
p0 queue free %			100		100	95
cM capacity (veh/h)			633		247	444

Direction, Lane #	EB 1	EB 2	WB 1	WB 2	NB 1
Volume Total	554	298	616	616	21
Volume Left	0	0	0	0	0
Volume Right	0	21	0	0	21
cSH	1700	1700	1700	1700	444
Volume to Capacity	0.33	0.18	0.36	0.36	0.05
Queue Length 95th (ft)	0	0	0	0	4
Control Delay (s)	0.0	0.0	0.0	0.0	13.5
Lane LOS					B
Approach Delay (s)	0.0		0.0		13.5
Approach LOS					B

Intersection Summary			
Average Delay	0.1		
Intersection Capacity Utilization	52.2%	ICU Level of Service	A
Analysis Period (min)	15		

Movement	EBT	EBR	WBL	WBT	NBL	NBR
Lane Configurations						
Sign Control	Free			Free	Stop	
Grade	0%			0%	0%	
Volume (veh/h)	800	10	0	1170	0	60
Peak Hour Factor	0.96	0.96	0.96	0.96	0.96	0.96
Hourly flow rate (vph)	833	10	0	1219	0	62
Pedestrians				123	123	
Lane Width (ft)				12.0	12.0	
Walking Speed (ft/s)				4.0	4.0	
Percent Blockage				10	10	
Right turn flare (veh)						
Median type					None	
Median storage veh)						
Upstream signal (ft)	298			189		
pX, platoon unblocked			0.79		0.89	0.79
vC, conflicting volume			967		1571	668
vC1, stage 1 conf vol						
vC2, stage 2 conf vol						
vCu, unblocked vol			688		803	309
tC, single (s)			4.1		6.8	6.9
tC, 2 stage (s)						
tF (s)			2.2		3.5	3.3
p0 queue free %			100		100	86
cM capacity (veh/h)			638		257	436

Direction, Lane #	EB 1	EB 2	WB 1	WB 2	NB 1
Volume Total	556	288	609	609	62
Volume Left	0	0	0	0	0
Volume Right	0	10	0	0	62
cSH	1700	1700	1700	1700	436
Volume to Capacity	0.33	0.17	0.36	0.36	0.14
Queue Length 95th (ft)	0	0	0	0	12
Control Delay (s)	0.0	0.0	0.0	0.0	14.6
Lane LOS					B
Approach Delay (s)	0.0		0.0		14.6
Approach LOS					B

Intersection Summary			
Average Delay	0.4		
Intersection Capacity Utilization	52.2%	ICU Level of Service	A
Analysis Period (min)	15		

Movement	EBL	EBT	EBR	WBL	WBT	WBR	NBL	NBT	NBR	SBL	SBT	SBR
Lane Configurations												
Ideal Flow (vphpl)	1900	1900	1900	1900	1900	1900	1900	1900	1900	1900	1900	1900
Total Lost time (s)	4.0	4.0		4.0	4.0		4.0	4.0		4.0	4.0	
Lane Util. Factor	1.00	0.95		1.00	0.95		1.00	0.95		1.00	0.95	
Frpb, ped/bikes	1.00	0.93		1.00	0.98		1.00	0.99		1.00	0.98	
Flpb, ped/bikes	0.97	1.00		0.96	1.00		1.00	1.00		1.00	1.00	
Frt	1.00	0.94		1.00	0.98		1.00	0.99		1.00	0.97	
Flt Protected	0.95	1.00		0.95	1.00		0.95	1.00		0.95	1.00	
Satd. Flow (prot)	1718	3083		1692	3413		1770	3461		1770	3343	
Flt Permitted	0.15	1.00		0.20	1.00		0.95	1.00		0.95	1.00	
Satd. Flow (perm)	278	3083		351	3413		1770	3461		1770	3343	
Volume (vph)	160	420	280	110	710	90	120	460	40	100	1270	340
Peak-hour factor, PHF	0.95	0.95	0.95	0.95	0.95	0.95	0.95	0.95	0.95	0.95	0.95	0.95
Adj. Flow (vph)	168	442	295	116	747	95	126	484	42	105	1337	358
RTOR Reduction (vph)	0	135	0	0	12	0	0	7	0	0	26	0
Lane Group Flow (vph)	168	602	0	116	830	0	126	519	0	105	1669	0
Confl. Peds. (#/hr)	72		137	137		72			58	58		92
Turn Type	Perm			Perm			Prot			Prot		
Protected Phases		4			8		5	2		1	6	
Permitted Phases	4			8								
Actuated Green, G (s)	25.5	25.5		25.5	25.5		9.1	37.9		8.1	36.9	
Effective Green, g (s)	26.0	26.0		26.0	26.0		9.6	38.4		8.6	37.4	
Actuated g/C Ratio	0.31	0.31		0.31	0.31		0.11	0.45		0.10	0.44	
Clearance Time (s)	4.5	4.5		4.5	4.5		4.5	4.5		4.5	4.5	
Vehicle Extension (s)	2.0	2.0		2.0	2.0		2.0	2.0		2.0	2.0	
Lane Grp Cap (vph)	85	943		107	1044		200	1564		179	1471	
v/s Ratio Prot		0.20			0.24		c0.07	0.15		0.06	c0.50	
v/s Ratio Perm	c0.60			0.33								
v/c Ratio	1.98	0.64		1.08	0.80		0.63	0.33		0.59	1.13	
Uniform Delay, d1	29.5	25.4		29.5	27.1		36.0	15.0		36.5	23.8	
Progression Factor	1.00	1.00		1.00	1.00		1.22	0.88		1.00	1.00	
Incremental Delay, d2	478.8	1.1		111.5	4.0		3.9	0.5		3.1	69.6	
Delay (s)	508.3	26.5		141.0	31.0		48.0	13.7		39.6	93.4	
Level of Service	F	C		F	C		D	B		D	F	
Approach Delay (s)		115.9			44.3			20.3			90.3	
Approach LOS		F			D			C			F	

Intersection Summary			
HCM Average Control Delay	74.9	HCM Level of Service	E
HCM Volume to Capacity ratio	1.37		
Actuated Cycle Length (s)	85.0	Sum of lost time (s)	12.0
Intersection Capacity Utilization	99.1%	ICU Level of Service	F
Analysis Period (min)	15		

c Critical Lane Group

Movement	EBL	EBR	NBL	NBT	SBT	SBR
Lane Configurations						
Sign Control	Stop			Free	Free	
Grade	0%			0%	0%	
Volume (veh/h)	10	20	40	640	1610	30
Peak Hour Factor	0.95	0.95	0.95	0.95	0.95	0.95
Hourly flow rate (vph)	11	21	42	674	1695	32
Pedestrians	100			100	100	
Lane Width (ft)	12.0			12.0	12.0	
Walking Speed (ft/s)	4.0			4.0	4.0	
Percent Blockage	8			8	8	
Right turn flare (veh)						
Median type	None					
Median storage veh)						
Upstream signal (ft)				396	625	
pX, platoon unblocked	0.63	0.60	0.60			
vC, conflicting volume	2332	1063	1826			
vC1, stage 1 conf vol						
vC2, stage 2 conf vol						
vCu, unblocked vol	2297	445	1712			
tC, single (s)	6.8	6.9	4.1			
tC, 2 stage (s)						
tF (s)	3.5	3.3	2.2			
p0 queue free %	23	93	79			
cM capacity (veh/h)	14	284	203			

Direction, Lane #	EB 1	NB 1	NB 2	NB 3	SB 1	SB 2
Volume Total	32	42	337	337	1130	596
Volume Left	11	42	0	0	0	0
Volume Right	21	0	0	0	0	32
cSH	37	203	1700	1700	1700	1700
Volume to Capacity	0.85	0.21	0.20	0.20	0.66	0.35
Queue Length 95th (ft)	78	19	0	0	0	0
Control Delay (s)	261.9	27.4	0.0	0.0	0.0	0.0
Lane LOS	F	D				
Approach Delay (s)	261.9	1.6			0.0	
Approach LOS	F					

Intersection Summary			
Average Delay	3.8		
Intersection Capacity Utilization	65.3%	ICU Level of Service	C
Analysis Period (min)	15		

Movement	WBL	WBR	NBT	NBR	SBL	SBT
Lane Configurations						
Sign Control	Stop		Free			Free
Grade	0%		0%			0%
Volume (veh/h)	20	30	650	20	20	1610
Peak Hour Factor	0.95	0.95	0.95	0.95	0.95	0.95
Hourly flow rate (vph)	21	32	684	21	21	1695
Pedestrians	34		33			34
Lane Width (ft)	12.0		12.0			12.0
Walking Speed (ft/s)	4.0		4.0			4.0
Percent Blockage	3		3			3
Right turn flare (veh)						
Median type	None					
Median storage veh)						
Upstream signal (ft)			230			791
pX, platoon unblocked	0.66	0.92			0.92	
vC, conflicting volume	1651	421			739	
vC1, stage 1 conf vol						
vC2, stage 2 conf vol						
vCu, unblocked vol	1099	279			626	
tC, single (s)	6.8	6.9			4.1	
tC, 2 stage (s)						
tF (s)	3.5	3.3			2.2	
p0 queue free %	83	95			98	
cM capacity (veh/h)	126	622			848	

Direction, Lane #	WB 1	NB 1	NB 2	SB 1	SB 2	SB 3
Volume Total	53	456	249	21	847	847
Volume Left	21	0	0	21	0	0
Volume Right	32	0	21	0	0	0
cSH	242	1700	1700	848	1700	1700
Volume to Capacity	0.22	0.27	0.15	0.02	0.50	0.50
Queue Length 95th (ft)	20	0	0	2	0	0
Control Delay (s)	24.0	0.0	0.0	9.4	0.0	0.0
Lane LOS	C			A		
Approach Delay (s)	24.0	0.0		0.1		
Approach LOS	C					

Intersection Summary			
Average Delay	0.6		
Intersection Capacity Utilization	61.7%	ICU Level of Service	B
Analysis Period (min)	15		

Movement	EBL	EBT	EBR	WBL	WBT	WBR	NBL	NBT	NBR	SBL	SBT	SBR
Lane Configurations												
Ideal Flow (vphpl)	1900	1900	1900	1900	1900	1900	1900	1900	1900	1900	1900	1900
Total Lost time (s)		4.0		4.0	4.0			4.0		4.0	4.0	
Lane Util. Factor		0.91		1.00	0.95			1.00		1.00	1.00	
Frpb, ped/bikes		1.00		1.00	1.00			0.98		1.00	0.99	
Flpb, ped/bikes		1.00		1.00	1.00			1.00		0.98	1.00	
Frt		0.99		1.00	0.98			0.97		1.00	0.96	
Flt Protected		0.99		0.95	1.00			0.99		0.95	1.00	
Satd. Flow (prot)		4980		1763	3448			1750		1733	1763	
Flt Permitted		0.65		0.25	1.00			0.10		0.40	1.00	
Satd. Flow (perm)		3272		459	3448			180		725	1763	
Volume (vph)	210	700	50	70	1080	190	100	180	90	200	490	200
Peak-hour factor, PHF	0.95	0.95	0.95	0.95	0.95	0.95	0.95	0.95	0.95	0.95	0.95	0.95
Adj. Flow (vph)	221	737	53	74	1137	200	105	189	95	211	516	211
RTOR Reduction (vph)	0	7	0	0	17	0	0	13	0	0	18	0
Lane Group Flow (vph)	0	1004	0	74	1320	0	0	376	0	211	709	0
Confl. Peds. (#/hr)	24		18	18		24	24		48	48		24
Turn Type	Perm			Perm			Perm			Perm		
Protected Phases		4			8			2			6	
Permitted Phases	4			8			2			6		
Actuated Green, G (s)		51.0		51.0	51.0			24.0		24.0	24.0	
Effective Green, g (s)		52.0		52.0	52.0			25.0		25.0	25.0	
Actuated g/C Ratio		0.61		0.61	0.61			0.29		0.29	0.29	
Clearance Time (s)		5.0		5.0	5.0			5.0		5.0	5.0	
Lane Grp Cap (vph)		2002		281	2109			53		213	519	
v/s Ratio Prot					c0.38						0.40	
v/s Ratio Perm		0.31		0.16				c2.08		0.29		
v/c Ratio		1.36dl		0.26	0.63			7.09		0.99	1.37	
Uniform Delay, d1		9.2		7.6	10.4			30.0		29.9	30.0	
Progression Factor		1.00		1.00	1.00			1.00		1.00	1.00	
Incremental Delay, d2		0.9		2.3	1.4			2777.9		59.3	177.1	
Delay (s)		10.1		9.9	11.8			2807.9		89.2	207.1	
Level of Service		B		A	B			F		F	F	
Approach Delay (s)		10.1			11.7			2807.9			180.6	
Approach LOS		B			B			F			F	

Intersection Summary			
HCM Average Control Delay	343.7	HCM Level of Service	F
HCM Volume to Capacity ratio	2.73		
Actuated Cycle Length (s)	85.0	Sum of lost time (s)	8.0
Intersection Capacity Utilization	158.4%	ICU Level of Service	H
Analysis Period (min)	15		

dl Defacto Left Lane. Recode with 1 though lane as a left lane.
c Critical Lane Group

Movement	EBL	EBT	EBR	WBL	WBT	WBR	NBL	NBT	NBR	SBL	SBT	SBR
Lane Configurations												
Ideal Flow (vphpl)	1900	1900	1900	1900	1900	1900	1900	1900	1900	1900	1900	1900
Total Lost time (s)		4.0			4.0		4.0	4.0		4.0	4.0	
Lane Util. Factor		0.91			0.91		1.00	1.00		1.00	1.00	
Frpb, ped/bikes		1.00			1.00		1.00	0.99		1.00	1.00	
Flpb, ped/bikes		1.00			1.00		1.00	1.00		0.99	1.00	
Frt		1.00			0.99		1.00	0.97		1.00	0.97	
Flt Protected		1.00			1.00		0.95	1.00		0.95	1.00	
Satd. Flow (prot)		5033			5008		1762	1792		1755	1802	
Flt Permitted		0.74			0.81		0.20	1.00		0.20	1.00	
Satd. Flow (perm)		3730			4071		362	1792		360	1802	
Volume (vph)	80	900	30	70	1170	110	70	300	80	150	350	80
Peak-hour factor, PHF	0.95	0.95	0.95	0.95	0.95	0.95	0.95	0.95	0.95	0.95	0.95	0.95
Adj. Flow (vph)	84	947	32	74	1232	116	74	316	84	158	368	84
RTOR Reduction (vph)	0	4	0	0	13	0	0	12	0	0	10	0
Lane Group Flow (vph)	0	1059	0	0	1409	0	74	388	0	158	442	0
Confl. Peds. (#/hr)			18	18			12		18	18		12
Turn Type	Perm			Perm			Perm			Perm		
Protected Phases		4			8			2			6	
Permitted Phases	4			8			2			6		
Actuated Green, G (s)		50.0			50.0		19.0	19.0		19.0	19.0	
Effective Green, g (s)		51.5			51.5		20.5	20.5		20.5	20.5	
Actuated g/C Ratio		0.64			0.64		0.26	0.26		0.26	0.26	
Clearance Time (s)		5.5			5.5		5.5	5.5		5.5	5.5	
Lane Grp Cap (vph)		2401			2621		93	459		92	462	
v/s Ratio Prot								0.22			0.25	
v/s Ratio Perm		0.28			c0.35		0.20			c0.44		
v/c Ratio		0.44			0.54		0.80	0.85		1.72	0.96	
Uniform Delay, d1		7.1			7.8		27.8	28.2		29.8	29.3	
Progression Factor		1.00			0.56		1.00	1.00		1.20	1.20	
Incremental Delay, d2		0.6			0.6		49.1	17.2		359.8	29.7	
Delay (s)		7.7			5.0		76.9	45.5		395.3	65.0	
Level of Service		A			A		E	D		F	E	
Approach Delay (s)		7.7			5.0			50.4			150.6	
Approach LOS		A			A			D			F	

Intersection Summary			
HCM Average Control Delay	36.7	HCM Level of Service	D
HCM Volume to Capacity ratio	0.87		
Actuated Cycle Length (s)	80.0	Sum of lost time (s)	8.0
Intersection Capacity Utilization	88.9%	ICU Level of Service	E
Analysis Period (min)	15		
c Critical Lane Group			

Movement	EBL	EBT	EBR	WBL	WBT	WBR	NBL	NBT	NBR	SBL	SBT	SBR
Lane Configurations												
Ideal Flow (vphpl)	1900	1900	1900	1900	1900	1900	1900	1900	1900	1900	1900	1900
Total Lost time (s)		4.0			4.0			4.0			4.0	
Lane Util. Factor		0.91			0.91			0.95			0.95	
Frpb, ped/bikes		1.00			1.00			1.00			1.00	
Flpb, ped/bikes		1.00			1.00			1.00			1.00	
Frt		0.99			0.98			0.98			0.99	
Flt Protected		1.00			1.00			0.99			0.99	
Satd. Flow (prot)		5023			4971			3408			3456	
Flt Permitted		0.77			0.80			0.73			0.85	
Satd. Flow (perm)		3880			4004			2491			2959	
Volume (vph)	60	1020	60	70	1270	180	40	170	40	80	450	50
Peak-hour factor, PHF	0.95	0.95	0.95	0.95	0.95	0.95	0.95	0.95	0.95	0.95	0.95	0.95
Adj. Flow (vph)	63	1074	63	74	1337	189	42	179	42	84	474	53
RTOR Reduction (vph)	0	7	0	0	21	0	0	19	0	0	9	0
Lane Group Flow (vph)	0	1193	0	0	1579	0	0	244	0	0	602	0
Confl. Peds. (#/hr)	17		19	19		17	12		16	16		12
Turn Type	Perm			Perm			Perm			Perm		
Protected Phases		4			8			2			6	
Permitted Phases	4			8			2			6		
Actuated Green, G (s)		50.0			50.0			19.0			19.0	
Effective Green, g (s)		51.5			51.5			20.5			20.5	
Actuated g/C Ratio		0.64			0.64			0.26			0.26	
Clearance Time (s)		5.5			5.5			5.5			5.5	
Lane Grp Cap (vph)		2498			2578			638			758	
v/s Ratio Prot												
v/s Ratio Perm		0.31			c0.39			0.10			c0.20	
v/c Ratio		0.48			0.61			0.38			0.79	
Uniform Delay, d1		7.3			8.4			24.5			27.8	
Progression Factor		0.66			1.00			1.00			0.34	
Incremental Delay, d2		0.5			1.1			1.7			7.8	
Delay (s)		5.3			9.5			26.3			17.3	
Level of Service		A			A			C			B	
Approach Delay (s)		5.3			9.5			26.3			17.3	
Approach LOS		A			A			C			B	

Intersection Summary			
HCM Average Control Delay	10.6	HCM Level of Service	B
HCM Volume to Capacity ratio	0.66		
Actuated Cycle Length (s)	80.0	Sum of lost time (s)	8.0
Intersection Capacity Utilization	122.1%	ICU Level of Service	H
Analysis Period (min)	15		
c Critical Lane Group			

Movement	EBL	EBT	WBT	WBR	SBL	SBR
Lane Configurations						
Sign Control		Free	Free		Stop	
Grade		0%	0%		0%	
Volume (veh/h)	0	1250	1370	30	0	150
Peak Hour Factor	0.95	0.95	0.95	0.95	0.95	0.95
Hourly flow rate (vph)	0	1316	1442	32	0	158
Pedestrians		98			98	
Lane Width (ft)		12.0			12.0	
Walking Speed (ft/s)		4.0			4.0	
Percent Blockage		8			8	
Right turn flare (veh)						
Median type					None	
Median storage veh)						
Upstream signal (ft)		698	473			
pX, platoon unblocked	0.86				0.88	0.86
vC, conflicting volume	1572				1979	677
vC1, stage 1 conf vol						
vC2, stage 2 conf vol						
vCu, unblocked vol	1330				1584	283
tC, single (s)	4.1				6.8	6.9
tC, 2 stage (s)						
tF (s)	2.2				3.5	3.3
p0 queue free %	100				100	69
cM capacity (veh/h)	404				80	515

Direction, Lane #	EB 1	EB 2	EB 3	WB 1	WB 2	WB 3	WB 4	SB 1
Volume Total	439	439	439	481	481	481	32	158
Volume Left	0	0	0	0	0	0	0	0
Volume Right	0	0	0	0	0	0	32	158
cSH	1700	1700	1700	1700	1700	1700	1700	515
Volume to Capacity	0.26	0.26	0.26	0.28	0.28	0.28	0.02	0.31
Queue Length 95th (ft)	0	0	0	0	0	0	0	32
Control Delay (s)	0.0	0.0	0.0	0.0	0.0	0.0	0.0	15.1
Lane LOS								C
Approach Delay (s)	0.0			0.0				15.1
Approach LOS								C

Intersection Summary			
Average Delay	0.8		
Intersection Capacity Utilization	48.3%	ICU Level of Service	A
Analysis Period (min)	15		

Movement	EBL	EBT	EBR	WBL	WBT	WBR	NBL	NBT	NBR	SBL	SBT	SBR
Lane Configurations												
Ideal Flow (vphpl)	1900	1900	1900	1900	1900	1900	1900	1900	1900	1900	1900	1900
Total Lost time (s)		4.0			4.0		4.0	4.0		4.0	4.0	
Lane Util. Factor		0.91			0.91		1.00	0.95		1.00	0.95	
Frpb, ped/bikes		1.00			0.99		1.00	0.99		1.00	1.00	
Flpb, ped/bikes		1.00			1.00		1.00	1.00		0.99	1.00	
Frt		0.98			0.98		1.00	0.97		1.00	0.98	
Flt Protected		1.00			0.99		0.95	1.00		0.95	1.00	
Satd. Flow (prot)		4940			4917		1770	3406		1744	3452	
Flt Permitted		0.68			0.64		0.13	1.00		0.40	1.00	
Satd. Flow (perm)		3365			3182		242	3406		734	3452	
Volume (vph)	100	980	180	200	1130	200	100	370	90	360	1110	170
Peak-hour factor, PHF	0.95	0.95	0.95	0.95	0.95	0.95	0.95	0.95	0.95	0.95	0.95	0.95
Adj. Flow (vph)	105	1032	189	211	1189	211	105	389	95	379	1168	179
RTOR Reduction (vph)	0	23	0	0	26	0	0	24	0	0	13	0
Lane Group Flow (vph)	0	1303	0	0	1585	0	105	460	0	379	1334	0
Confl. Peds. (#/hr)	40		9			40	25		31	31		25
Turn Type	Perm			pm+pt			Perm			Perm		
Protected Phases		4		3	8			2			6	
Permitted Phases	4			8			2			6		
Actuated Green, G (s)		44.7			44.7		29.8	29.8		29.8	29.8	
Effective Green, g (s)		46.2			46.2		30.8	30.8		30.8	30.8	
Actuated g/C Ratio		0.54			0.54		0.36	0.36		0.36	0.36	
Clearance Time (s)		5.5			5.5		5.0	5.0		5.0	5.0	
Vehicle Extension (s)		2.0			2.0		2.0	2.0		2.0	2.0	
Lane Grp Cap (vph)		1829			1730		88	1234		266	1251	
v/s Ratio Prot								0.14			0.39	
v/s Ratio Perm		0.39			c0.50		0.43			c0.52		
v/c Ratio		0.71			1.40dl		1.19	0.37		1.42	1.07	
Uniform Delay, d1		14.4			17.6		27.1	20.0		27.1	27.1	
Progression Factor		1.00			1.00		1.27	1.29		1.14	1.14	
Incremental Delay, d2		1.1			7.9		155.4	0.8		193.2	31.7	
Delay (s)		15.6			25.5		189.8	26.6		224.0	62.5	
Level of Service		B			C		F	C		F	E	
Approach Delay (s)		15.6			25.5			55.7			97.9	
Approach LOS		B			C			E			F	

Intersection Summary			
HCM Average Control Delay	50.2	HCM Level of Service	D
HCM Volume to Capacity ratio	1.12		
Actuated Cycle Length (s)	85.0	Sum of lost time (s)	8.0
Intersection Capacity Utilization	111.2%	ICU Level of Service	H
Analysis Period (min)	15		

dl Defacto Left Lane. Recode with 1 though lane as a left lane.
c Critical Lane Group

Movement	EBL	EBT	EBR	WBL	WBT	WBR	NBL	NBT	NBR	SBL	SBT	SBR
Lane Configurations												
Ideal Flow (vphpl)	1900	1900	1900	1900	1900	1900	1900	1900	1900	1900	1900	1900
Total Lost time (s)		4.0			4.0			4.0	4.0		4.0	
Lane Util. Factor		0.91			0.91			1.00	1.00		1.00	
Frpb, ped/bikes		1.00			0.99			1.00	0.88		0.97	
Flpb, ped/bikes		1.00			1.00			0.97	1.00		0.95	
Frt		1.00			0.99			1.00	0.85		0.96	
Flt Protected		1.00			1.00			0.98	1.00		0.98	
Satd. Flow (prot)		5060			5005			1769	1395		1602	
Flt Permitted		0.83			0.82			0.84	1.00		0.81	
Satd. Flow (perm)		4209			4111			1517	1395		1338	
Volume (vph)	40	1400	20	50	1470	90	30	40	30	100	40	60
Peak-hour factor, PHF	0.95	0.95	0.95	0.95	0.95	0.95	0.95	0.95	0.95	0.95	0.95	0.95
Adj. Flow (vph)	42	1474	21	53	1547	95	32	42	32	105	42	63
RTOR Reduction (vph)	0	2	0	0	8	0	0	0	18	0	16	0
Lane Group Flow (vph)	0	1535	0	0	1687	0	0	74	14	0	194	0
Confl. Peds. (#/hr)	100		100	100		100	100		100	100		100
Turn Type	Perm			Perm			Perm		Perm	Perm		
Protected Phases		4			8			2			6	
Permitted Phases	4			8			2		2	6		
Actuated Green, G (s)		48.0			48.0			23.0	23.0		23.0	
Effective Green, g (s)		48.5			48.5			23.5	23.5		23.5	
Actuated g/C Ratio		0.61			0.61			0.29	0.29		0.29	
Clearance Time (s)		4.5			4.5			4.5	4.5		4.5	
Lane Grp Cap (vph)		2552			2492			446	410		393	
v/s Ratio Prot												
v/s Ratio Perm		0.36			c0.41			0.05	0.01		c0.15	
v/c Ratio		0.60			0.68			0.17	0.03		0.49	
Uniform Delay, d1		9.8			10.5			21.0	20.1		23.3	
Progression Factor		1.00			1.00			1.00	1.00		1.00	
Incremental Delay, d2		1.1			1.5			0.8	0.2		4.4	
Delay (s)		10.8			12.0			21.8	20.3		27.7	
Level of Service		B			B			C	C		C	
Approach Delay (s)		10.8			12.0			21.3			27.7	
Approach LOS		B			B			C			C	

Intersection Summary			
HCM Average Control Delay	12.7	HCM Level of Service	B
HCM Volume to Capacity ratio	0.62		
Actuated Cycle Length (s)	80.0	Sum of lost time (s)	8.0
Intersection Capacity Utilization	93.9%	ICU Level of Service	F
Analysis Period (min)	15		
c Critical Lane Group			

Movement	EBL	EBT	EBR	WBL	WBT	WBR	NBL	NBT	NBR	SBL	SBT	SBR
Lane Configurations												
Ideal Flow (vphpl)	1900	1900	1900	1900	1900	1900	1900	1900	1900	1900	1900	1900
Total Lost time (s)	4.0	4.0		4.0	4.0		4.0	4.0	4.0	4.0	4.0	4.0
Lane Util. Factor	1.00	0.91		1.00	0.91		1.00	0.95	1.00	1.00	0.95	1.00
Frpb, ped/bikes	1.00	0.99		1.00	0.99		1.00	1.00	0.96	1.00	1.00	0.96
Flpb, ped/bikes	1.00	1.00		1.00	1.00		1.00	1.00	1.00	1.00	1.00	1.00
Frt	1.00	0.98		1.00	0.96		1.00	1.00	0.85	1.00	1.00	0.85
Flt Protected	0.95	1.00		0.95	1.00		0.95	1.00	1.00	0.95	1.00	1.00
Satd. Flow (prot)	1770	4923		1770	4839		1770	3539	1515	1770	3539	1523
Flt Permitted	0.95	1.00		0.95	1.00		0.95	1.00	1.00	0.95	1.00	1.00
Satd. Flow (perm)	1770	4923		1770	4839		1770	3539	1515	1770	3539	1523
Volume (vph)	170	1200	170	210	1140	380	120	420	130	390	1440	250
Peak-hour factor, PHF	0.95	0.95	0.95	0.95	0.95	0.95	0.95	0.95	0.95	0.95	0.95	0.95
Adj. Flow (vph)	179	1263	179	221	1200	400	126	442	137	411	1516	263
RTOR Reduction (vph)	0	15	0	0	50	0	0	0	31	0	0	21
Lane Group Flow (vph)	179	1427	0	221	1550	0	126	442	106	411	1516	242
Confl. Peds. (#/hr)			66			23			38			26
Turn Type	Prot			Prot			Prot		pm ov	Prot		pm ov
Protected Phases	7	4		3	8		5	2	3	1	6	7
Permitted Phases									2			6
Actuated Green, G (s)	12.0	32.0		15.0	35.0		10.6	28.0	43.0	29.0	46.4	58.4
Effective Green, g (s)	11.0	33.0		14.0	36.0		9.6	29.0	43.0	28.0	47.4	58.4
Actuated g/C Ratio	0.09	0.28		0.12	0.30		0.08	0.24	0.36	0.23	0.39	0.49
Clearance Time (s)	3.0	5.0		3.0	5.0		3.0	5.0	3.0	3.0	5.0	3.0
Vehicle Extension (s)	2.0	2.0		2.0	2.0		2.0	2.0	2.0	2.0	2.0	2.0
Lane Grp Cap (vph)	162	1354		207	1452		142	855	593	413	1398	792
v/s Ratio Prot	0.10	0.29		c0.12	c0.32		0.07	0.12	0.02	c0.23	c0.43	0.03
v/s Ratio Perm									0.05			0.13
v/c Ratio	1.10	1.05		1.07	1.07		0.89	0.52	0.18	1.00	1.08	0.31
Uniform Delay, d1	54.5	43.5		53.0	42.0		54.7	39.4	26.4	45.9	36.3	18.6
Progression Factor	1.00	1.00		1.00	1.00		1.00	1.00	1.00	1.00	1.00	1.00
Incremental Delay, d2	101.6	40.0		81.6	44.0		42.6	2.2	0.1	42.7	50.4	0.1
Delay (s)	156.1	83.5		134.6	86.0		97.2	41.7	26.5	88.6	86.7	18.7
Level of Service	F	F		F	F		F	D	C	F	F	B
Approach Delay (s)		91.5			91.9			48.6			78.9	
Approach LOS		F			F			D			E	

Intersection Summary			
HCM Average Control Delay	82.5	HCM Level of Service	F
HCM Volume to Capacity ratio	1.10		
Actuated Cycle Length (s)	120.0	Sum of lost time (s)	16.0
Intersection Capacity Utilization	100.3%	ICU Level of Service	G
Analysis Period (min)	15		
c Critical Lane Group			

Movement	EBL	EBT	EBR	WBL	WBT	WBR	NBL	NBT	NBR	SBL	SBT	SBR
Lane Configurations												
Ideal Flow (vphpl)	1900	1900	1900	1900	1900	1900	1900	1900	1900	1900	1900	1900
Total Lost time (s)		4.0			4.0		4.0	4.0		4.0	4.0	
Lane Util. Factor		1.00			1.00		1.00	0.95		1.00	0.95	
Frpb, ped/bikes		0.94			0.97		1.00	0.98		1.00	0.99	
Flpb, ped/bikes		0.98			0.96		0.98	1.00		0.93	1.00	
Frt		0.96			0.96		1.00	0.99		1.00	0.99	
Flt Protected		0.98			0.98		0.95	1.00		0.95	1.00	
Satd. Flow (prot)		1607			1636		1731	3427		1654	3472	
Flt Permitted		0.72			0.78		0.18	1.00		0.39	1.00	
Satd. Flow (perm)		1175			1305		320	3427		678	3472	
Volume (vph)	60	50	50	70	80	60	80	570	60	50	1170	70
Peak-hour factor, PHF	0.95	0.95	0.95	0.95	0.95	0.95	0.95	0.95	0.95	0.95	0.95	0.95
Adj. Flow (vph)	63	53	53	74	84	63	84	600	63	53	1232	74
RTOR Reduction (vph)	0	22	0	0	20	0	0	7	0	0	4	0
Lane Group Flow (vph)	0	147	0	0	201	0	84	656	0	53	1302	0
Confl. Peds. (#/hr)	100		100	100		100	100		100	100		100
Turn Type	Perm			Perm			Perm			Perm		
Protected Phases		4			4			2			6	
Permitted Phases	4			4			2			6		
Actuated Green, G (s)		15.7			15.7		62.3	62.3		62.3	62.3	
Effective Green, g (s)		15.2			15.2		61.8	61.8		61.8	61.8	
Actuated g/C Ratio		0.18			0.18		0.73	0.73		0.73	0.73	
Clearance Time (s)		3.5			3.5		3.5	3.5		3.5	3.5	
Vehicle Extension (s)		2.0			2.0		2.0	2.0		2.0	2.0	
Lane Grp Cap (vph)		210			233		233	2492		493	2524	
v/s Ratio Prot								0.19			c0.38	
v/s Ratio Perm		0.12			c0.15		0.26			0.08		
v/c Ratio		0.70			0.86		0.36	0.26		0.11	0.52	
Uniform Delay, d1		32.8			33.9		4.3	3.9		3.4	5.1	
Progression Factor		1.00			1.00		1.00	1.00		0.97	0.89	
Incremental Delay, d2		7.9			25.8		4.3	0.3		0.0	0.1	
Delay (s)		40.7			59.7		8.6	4.2		3.4	4.6	
Level of Service		D			E		A	A		A	A	
Approach Delay (s)		40.7			59.7			4.7			4.5	
Approach LOS		D			E			A			A	

Intersection Summary			
HCM Average Control Delay	11.9	HCM Level of Service	B
HCM Volume to Capacity ratio	0.58		
Actuated Cycle Length (s)	85.0	Sum of lost time (s)	8.0
Intersection Capacity Utilization	69.2%	ICU Level of Service	C
Analysis Period (min)	15		

c Critical Lane Group

Movement	EBL	EBT	EBR	WBL	WBT	WBR	NBL	NBT	NBR	SBL	SBT	SBR
Lane Configurations												
Ideal Flow (vphpl)	1900	1900	1900	1900	1900	1900	1900	1900	1900	1900	1900	1900
Total Lost time (s)	4.0	4.0		4.0	4.0		4.0	4.0		4.0	4.0	
Lane Util. Factor	1.00	0.95		1.00	0.95		1.00	0.95		1.00	0.95	
Frpb, ped/bikes	1.00	0.98		1.00	0.96		1.00	0.98		1.00	0.97	
Flpb, ped/bikes	1.00	1.00		1.00	1.00		0.99	1.00		0.95	1.00	
Frt	1.00	0.98		1.00	0.97		1.00	0.98		1.00	0.97	
Flt Protected	0.95	1.00		0.95	1.00		0.95	1.00		0.95	1.00	
Satd. Flow (prot)	1770	3379		1770	3276		1746	3409		1683	3335	
Flt Permitted	0.95	1.00		0.95	1.00		0.12	1.00		0.45	1.00	
Satd. Flow (perm)	1770	3379		1770	3276		216	3409		800	3335	
Volume (vph)	270	500	100	140	710	190	70	350	60	160	1000	220
Peak-hour factor, PHF	0.95	0.95	0.95	0.95	0.95	0.95	0.95	0.95	0.95	0.95	0.95	0.95
Adj. Flow (vph)	284	526	105	147	747	200	74	368	63	168	1053	232
RTOR Reduction (vph)	0	18	0	0	28	0	0	16	0	0	21	0
Lane Group Flow (vph)	284	613	0	147	919	0	74	415	0	168	1264	0
Confl. Peds. (#/hr)			100			100	100		100	100		100
Turn Type	Prot			Prot			Perm			Perm		
Protected Phases	7	4		3	8			2			6	
Permitted Phases							2			6		
Actuated Green, G (s)	16.5	28.0		11.0	22.5		32.5	32.5		32.5	32.5	
Effective Green, g (s)	17.0	27.5		11.5	22.0		34.0	34.0		34.0	34.0	
Actuated g/C Ratio	0.20	0.32		0.14	0.26		0.40	0.40		0.40	0.40	
Clearance Time (s)	4.5	3.5		4.5	3.5		5.5	5.5		5.5	5.5	
Vehicle Extension (s)	2.0	2.0		2.0	2.0		2.0	2.0		2.0	2.0	
Lane Grp Cap (vph)	354	1093		239	848		86	1364		320	1334	
v/s Ratio Prot	c0.16	0.18		0.08	c0.28			0.12			c0.38	
v/s Ratio Perm							0.34			0.21		
v/c Ratio	0.80	0.56		0.62	1.08		0.86	0.30		0.53	0.95	
Uniform Delay, d1	32.4	23.8		34.7	31.5		23.3	17.4		19.4	24.6	
Progression Factor	1.00	1.00		1.00	1.00		1.00	1.00		1.00	1.00	
Incremental Delay, d2	11.7	0.4		3.3	56.1		63.9	0.6		6.0	14.9	
Delay (s)	44.1	24.2		37.9	87.6		87.3	18.0		25.4	39.6	
Level of Service	D	C		D	F		F	B		C	D	
Approach Delay (s)		30.3			80.9			28.2			37.9	
Approach LOS		C			F			C			D	

Intersection Summary			
HCM Average Control Delay	46.8	HCM Level of Service	D
HCM Volume to Capacity ratio	0.95		
Actuated Cycle Length (s)	85.0	Sum of lost time (s)	12.0
Intersection Capacity Utilization	95.2%	ICU Level of Service	F
Analysis Period (min)	15		

c Critical Lane Group

HCM Signalized Intersection Capacity Analysis
1: 52nd St. & Shattuck Ave.

2030 PM
1/11/2008

Movement	EBL	EBT	EBR	WBL	WBT	WBR	NBL	NBT	NBR	SBL	SBT	SBR
Lane Configurations												
Ideal Flow (vphpl)	1900	1900	1900	1900	1900	1900	1900	1900	1900	1900	1900	1900
Lane Width	12	12	12	12	12	12	16	16	16	16	16	16
Total Lost time (s)	4.0	4.0		4.0	4.0		2.0	2.0		2.0	2.0	
Lane Util. Factor	1.00	0.91		1.00	0.91		1.00	1.00		1.00	1.00	
Frpb, ped/bikes	1.00	0.99		1.00	1.00		1.00	0.98		1.00	0.98	
Flpb, ped/bikes	1.00	1.00		1.00	1.00		1.00	1.00		0.98	1.00	
Frt	1.00	0.98		1.00	0.98		1.00	0.96		1.00	0.93	
Flt Protected	0.95	1.00		0.95	1.00		0.95	1.00		0.95	1.00	
Satd. Flow (prot)	1770	4933		1770	4960		2006	1987		1959	1915	
Flt Permitted	0.95	1.00		0.95	1.00		0.12	1.00		0.54	1.00	
Satd. Flow (perm)	1770	4933		1770	4960		259	1987		1118	1915	
Volume (vph)	350	1300	180	120	1070	170	200	250	100	160	280	280
Peak-hour factor, PHF	0.95	0.95	0.95	0.95	0.95	0.95	0.95	0.95	0.95	0.95	0.95	0.95
Adj. Flow (vph)	368	1368	189	126	1126	179	211	263	105	168	295	295
RTOR Reduction (vph)	0	18	0	0	21	0	0	15	0	0	37	0
Lane Group Flow (vph)	368	1539	0	126	1284	0	211	353	0	168	553	0
Confl. Peds. (#/hr)			32	32		4	12		24	24		12
Parking (#/hr)												0
Turn Type	Prot			Prot			pm pt			Perm		
Protected Phases	7	4		3	8		5	2			6	
Permitted Phases							2			6		
Actuated Green, G (s)	20.0	36.8		9.6	26.4		43.1	43.1		30.1	30.1	
Effective Green, g (s)	20.0	36.8		9.6	26.4		43.6	43.6		30.6	30.6	
Actuated g/C Ratio	0.20	0.37		0.10	0.26		0.44	0.44		0.31	0.31	
Clearance Time (s)	4.0	4.0		4.0	4.0		4.0	2.5		2.5	2.5	
Vehicle Extension (s)	3.0	3.0		3.0	3.0		3.0	3.0		3.0	3.0	
Lane Grp Cap (vph)	354	1815		170	1309		305	866		342	586	
v/s Ratio Prot	c0.21	0.31		0.07	c0.26		c0.08	0.18			c0.29	
v/s Ratio Perm							0.23			0.15		
v/c Ratio	1.04	0.85		0.74	0.98		0.69	0.41		0.49	0.94	
Uniform Delay, d1	40.0	29.0		44.0	36.5		44.3	19.3		28.3	33.9	
Progression Factor	1.00	1.00		1.00	1.00		1.00	1.00		1.00	1.00	
Incremental Delay, d2	58.5	5.1		15.9	20.7		6.6	0.3		1.1	24.0	
Delay (s)	98.5	34.2		59.9	57.2		50.9	19.7		29.5	57.9	
Level of Service	F	C		E	E		D	B		C	E	
Approach Delay (s)		46.5			57.4			31.0			51.6	
Approach LOS		D			E			C			D	

Intersection Summary			
HCM Average Control Delay	48.7	HCM Level of Service	D
HCM Volume to Capacity ratio	0.94		
Actuated Cycle Length (s)	100.0	Sum of lost time (s)	12.0
Intersection Capacity Utilization	100.8%	ICU Level of Service	G
Analysis Period (min)	15		

c Critical Lane Group

HCM Signalized Intersection Capacity Analysis
2: 52nd St. & Telegraph Ave.

2030 PM
1/11/2008

Movement	EBL	EBT	EBR	WBL	WBT	WBR	NBL	NBT	NBR	SBL	SBT	SBR
Lane Configurations												
Ideal Flow (vphpl)	1900	1900	1900	1900	1900	1900	1900	1900	1900	1900	1900	1900
Total Lost time (s)		4.0		4.0	4.0			4.0		4.0	4.0	
Lane Util. Factor		1.00		0.95	0.95			0.95		1.00	0.95	
Frpb, ped/bikes		1.00		1.00	0.97			0.98		1.00	0.95	
Flpb, ped/bikes		0.99		1.00	1.00			1.00		1.00	1.00	
Frt		0.93		1.00	0.93			0.95		1.00	0.95	
Flt Protected		0.99		0.95	1.00			1.00		0.95	1.00	
Satd. Flow (prot)		1705		1681	1586			3274		1770	3204	
Flt Permitted		0.36		0.73	1.00			0.94		0.95	1.00	
Satd. Flow (perm)		619		1290	1586			3087		1770	3204	
Volume (vph)	10	10	20	120	120	120	10	1100	610	200	880	420
Peak-hour factor, PHF	0.95	0.95	0.95	0.95	0.95	0.95	0.95	0.95	0.95	0.95	0.95	0.95
Adj. Flow (vph)	11	11	21	126	126	126	11	1158	642	211	926	442
RTOR Reduction (vph)	0	20	0	0	39	0	0	65	0	0	47	0
Lane Group Flow (vph)	0	23	0	126	213	0	0	1746	0	211	1321	0
Confl. Peds. (#/hr)	36					36	48		16	16		48
Turn Type	Perm			Perm			Perm			Prot		
Protected Phases		7			8			2		1	6	
Permitted Phases	7			8			2					
Actuated Green, G (s)		6.5		16.7	16.7			45.7		13.1	63.3	
Effective Green, g (s)		7.0		17.2	17.2			46.2		13.6	63.8	
Actuated g/C Ratio		0.07		0.17	0.17			0.46		0.14	0.64	
Clearance Time (s)		4.5		4.5	4.5			4.5		4.5	4.5	
Vehicle Extension (s)		2.0		2.0	2.0			2.0		2.0	2.0	
Lane Grp Cap (vph)		43		222	273			1426		241	2044	
v/s Ratio Prot										c0.12	0.41	
v/s Ratio Perm		c0.04		0.10	0.13			c0.57				
v/c Ratio		0.55		0.57	0.78			1.22		0.88	0.65	
Uniform Delay, d1		45.0		38.0	39.6			26.9		42.4	11.1	
Progression Factor		1.00		1.00	1.00			0.62		1.00	1.00	
Incremental Delay, d2		7.4		2.0	12.5			101.7		27.1	1.6	
Delay (s)		52.3		40.0	52.1			118.5		69.5	12.7	
Level of Service		D		D	D			F		E	B	
Approach Delay (s)		52.3			48.0			118.5			20.3	
Approach LOS		D			D			F			C	

Intersection Summary			
HCM Average Control Delay	70.1	HCM Level of Service	E
HCM Volume to Capacity ratio	1.02		
Actuated Cycle Length (s)	100.0	Sum of lost time (s)	16.0
Intersection Capacity Utilization	116.9%	ICU Level of Service	H
Analysis Period (min)	15		

c Critical Lane Group

Movement	EBL	EBT	EBR	WBL	WBT	WBR	NBL	NBT	NBR	SBL	SBT	SBR
Lane Configurations												
Ideal Flow (vphpl)	1900	1900	1900	1900	1900	1900	1900	1900	1900	1900	1900	1900
Total Lost time (s)	4.0	4.0		4.0	4.0		4.0	4.0		4.0	4.0	
Lane Util. Factor	0.97	0.95		1.00	0.95		1.00	0.95		1.00	0.95	
Frpb, ped/bikes	1.00	0.98		1.00	0.99		1.00	0.98		1.00	0.98	
Flpb, ped/bikes	1.00	1.00		1.00	1.00		1.00	1.00		1.00	1.00	
Frt	1.00	0.98		1.00	0.94		1.00	0.96		1.00	0.99	
Flt Protected	0.95	1.00		0.95	1.00		0.95	1.00		0.95	1.00	
Satd. Flow (prot)	3433	3420		1770	3299		1770	3324		1770	3411	
Flt Permitted	0.95	1.00		0.95	1.00		0.95	1.00		0.95	1.00	
Satd. Flow (perm)	3433	3420		1770	3299		1770	3324		1770	3411	
Volume (vph)	460	930	130	160	580	350	100	930	350	300	670	60
Peak-hour factor, PHF	0.95	0.95	0.95	0.95	0.95	0.95	0.95	0.95	0.95	0.95	0.95	0.95
Adj. Flow (vph)	484	979	137	168	611	368	105	979	368	316	705	63
RTOR Reduction (vph)	0	11	0	0	90	0	0	39	0	0	7	0
Lane Group Flow (vph)	484	1105	0	168	889	0	105	1308	0	316	761	0
Confl. Peds. (#/hr)	15		48	48		15	123		48	48		123
Turn Type	Prot			Prot			Prot			Prot		
Protected Phases	7	4		3	8		5	2		1	6	
Permitted Phases												
Actuated Green, G (s)	15.7	27.5		10.9	22.7		5.0	32.6		12.0	39.6	
Effective Green, g (s)	15.2	28.5		10.4	23.7		4.5	33.6		11.5	40.6	
Actuated g/C Ratio	0.15	0.28		0.10	0.24		0.04	0.34		0.12	0.41	
Clearance Time (s)	3.5	5.0		3.5	5.0		3.5	5.0		3.5	5.0	
Vehicle Extension (s)	2.0	2.0		2.0	2.0		2.0	2.0		2.0	2.0	
Lane Grp Cap (vph)	522	975		184	782		80	1117		204	1385	
v/s Ratio Prot	c0.14	c0.32		0.09	0.27		0.06	c0.39		c0.18	0.22	
v/s Ratio Perm												
v/c Ratio	0.93	1.13		0.91	1.14		1.31	1.17		1.55	0.55	
Uniform Delay, d1	41.9	35.8		44.4	38.1		47.8	33.2		44.2	22.7	
Progression Factor	1.00	1.00		1.00	1.00		1.00	1.00		1.20	0.76	
Incremental Delay, d2	22.3	73.0		41.7	76.9		205.3	86.9		265.0	1.2	
Delay (s)	64.2	108.8		86.0	115.0		253.1	120.1		318.2	18.4	
Level of Service	E	F		F	F		F	F		F	B	
Approach Delay (s)		95.3			110.8			129.7			105.8	
Approach LOS		F			F			F			F	

Intersection Summary				
HCM Average Control Delay	110.3	HCM Level of Service	F	
HCM Volume to Capacity ratio	1.15			
Actuated Cycle Length (s)	100.0	Sum of lost time (s)	12.0	
Intersection Capacity Utilization	108.8%	ICU Level of Service	G	
Analysis Period (min)	15			

c Critical Lane Group

Movement	EBL	EBT	EBR	WBL	WBT	WBR	NBL	NBT	NBR	SBL	SBT	SBR
Lane Configurations												
Ideal Flow (vphpl)	1900	1900	1900	1900	1900	1900	1900	1900	1900	1900	1900	1900
Total Lost time (s)		4.0						4.0		4.0	4.0	
Lane Util. Factor		1.00						0.95		0.97	0.95	
Frt		0.86						0.94		1.00	0.98	
Flt Protected		1.00						1.00		0.95	1.00	
Satd. Flow (prot)		1611						3341		3433	3462	
Flt Permitted		1.00						0.95		0.95	1.00	
Satd. Flow (perm)		1611						3169		3433	3462	
Volume (vph)	0	0	10	0	0	0	10	550	330	1550	350	60
Peak-hour factor, PHF	0.95	0.95	0.95	0.95	0.95	0.95	0.95	0.95	0.95	0.95	0.95	0.95
Adj. Flow (vph)	0	0	11	0	0	0	11	579	347	1632	368	63
RTOR Reduction (vph)	0	11	0	0	0	0	0	18	0	0	0	0
Lane Group Flow (vph)	0	0	0	0	0	0	0	919	0	1632	431	0
Turn Type							Perm			Prot		
Protected Phases								2		1	6	
Permitted Phases							2					
Actuated Green, G (s)		0.0						13.0		29.0	50.0	
Effective Green, g (s)		0.0						13.0		29.0	50.0	
Actuated g/C Ratio		0.00						0.26		0.58	1.00	
Clearance Time (s)								4.0		4.0	2.0	
Lane Grp Cap (vph)		0						824		1991	3462	
v/s Ratio Prot										c0.48	0.12	
v/s Ratio Perm								c0.29				
v/c Ratio		0.00						1.12		0.82	0.12	
Uniform Delay, d1		25.0						18.5		8.4	0.0	
Progression Factor		1.00						0.72		1.00	1.00	
Incremental Delay, d2		0.0						66.5		3.9	0.1	
Delay (s)		25.0						79.8		12.3	0.1	
Level of Service		C						E		B	A	
Approach Delay (s)		25.0			0.0			79.8			9.8	
Approach LOS		C			A			E			A	

Intersection Summary				
HCM Average Control Delay	31.6	HCM Level of Service	C	
HCM Volume to Capacity ratio	0.91			
Actuated Cycle Length (s)	50.0	Sum of lost time (s)	8.0	
Intersection Capacity Utilization	83.6%	ICU Level of Service	E	
Analysis Period (min)	15			

c Critical Lane Group

Movement	EBL	EBT	EBR	WBL	WBT	WBR	NBL	NBT	NBR	SBL	SBT	SBR
Lane Configurations												
Ideal Flow (vphpl)	1900	1900	1900	1900	1900	1900	1900	1900	1900	1900	1900	1900
Total Lost time (s)		4.0			4.0			4.0			4.0	
Lane Util. Factor		1.00			1.00			0.95			0.95	
Frpb, ped/bikes		0.96			0.97			0.99			0.99	
Flpb, ped/bikes		0.99			0.97			1.00			1.00	
Frt		0.97			0.96			0.98			0.99	
Flt Protected		0.99			0.99			1.00			0.99	
Satd. Flow (prot)		1697			1668			3419			3425	
Flt Permitted		0.87			0.90			0.92			0.78	
Satd. Flow (perm)		1502			1515			3160			2700	
Volume (vph)	40	70	30	70	140	90	40	700	90	60	300	30
Peak-hour factor, PHF	0.95	0.95	0.95	0.95	0.95	0.95	0.95	0.95	0.95	0.95	0.95	0.95
Adj. Flow (vph)	42	74	32	74	147	95	42	737	95	63	316	32
RTOR Reduction (vph)	0	20	0	0	31	0	0	19	0	0	13	0
Lane Group Flow (vph)	0	128	0	0	285	0	0	856	0	0	399	0
Confl. Peds. (#/hr)	100		100	100		100	100		100	100		100
Turn Type	Perm			Perm			Perm			Perm		
Protected Phases		4			8			2			6	
Permitted Phases	4			8			2			6		
Actuated Green, G (s)		17.0			17.0			25.0			25.0	
Effective Green, g (s)		17.0			17.0			25.0			25.0	
Actuated g/C Ratio		0.34			0.34			0.50			0.50	
Clearance Time (s)		4.0			4.0			4.0			4.0	
Lane Grp Cap (vph)		511			515			1580			1350	
v/s Ratio Prot												
v/s Ratio Perm		0.09			c0.19			c0.27			0.15	
v/c Ratio		0.25			0.55			0.54			0.30	
Uniform Delay, d1		11.9			13.4			8.6			7.3	
Progression Factor		1.00			1.00			1.00			1.00	
Incremental Delay, d2		1.2			4.2			1.3			0.6	
Delay (s)		13.1			17.7			9.9			7.9	
Level of Service		B			B			A			A	
Approach Delay (s)		13.1			17.7			9.9			7.9	
Approach LOS		B			B			A			A	

Intersection Summary			
HCM Average Control Delay	11.1	HCM Level of Service	B
HCM Volume to Capacity ratio	0.55		
Actuated Cycle Length (s)	50.0	Sum of lost time (s)	8.0
Intersection Capacity Utilization	77.5%	ICU Level of Service	D
Analysis Period (min)	15		
c Critical Lane Group			

Movement	EBL	EBT	EBR	WBL	WBT	WBR	NBL	NBT	NBR	SBL	SBT	SBR
Lane Configurations												
Ideal Flow (vphpl)	1900	1900	1900	1900	1900	1900	1900	1900	1900	1900	1900	1900
Total Lost time (s)		4.0			4.0			4.0			4.0	
Lane Util. Factor		1.00			1.00			0.95			0.91	
Frpb, ped/bikes		0.96			0.96			0.99			0.98	
Flpb, ped/bikes		0.97			0.99			1.00			1.00	
Frt		0.96			0.96			0.99			0.99	
Flt Protected		0.98			0.99			1.00			1.00	
Satd. Flow (prot)		1623			1668			3453			4903	
Flt Permitted		0.74			0.89			0.77			0.80	
Satd. Flow (perm)		1222			1494			2667			3920	
Volume (vph)	80	70	70	30	80	50	90	1640	80	40	1050	90
Peak-hour factor, PHF	0.95	0.95	0.95	0.95	0.95	0.95	0.95	0.95	0.95	0.95	0.95	0.95
Adj. Flow (vph)	84	74	74	32	84	53	95	1726	84	42	1105	95
RTOR Reduction (vph)	0	21	0	0	3	0	0	2	0	0	7	0
Lane Group Flow (vph)	0	211	0	0	166	0	0	1903	0	0	1235	0
Confl. Peds. (#/hr)	100		100	100		100	100		100	100		100
Turn Type	Perm			Perm			Perm			Perm		
Protected Phases		4			4			2			6	
Permitted Phases	4			4			2			6		
Actuated Green, G (s)		15.2			15.2			55.8			55.8	
Effective Green, g (s)		15.7			15.7			56.3			56.3	
Actuated g/C Ratio		0.20			0.20			0.70			0.70	
Clearance Time (s)		4.5			4.5			4.5			4.5	
Vehicle Extension (s)		2.0			2.0			2.0			2.0	
Lane Grp Cap (vph)		240			293			1877			2759	
v/s Ratio Prot												
v/s Ratio Perm		c0.17			0.11			c0.71			0.32	
v/c Ratio		0.88			0.57			1.01			0.45	
Uniform Delay, d1		31.2			29.1			11.9			5.1	
Progression Factor		1.00			1.00			1.00			1.00	
Incremental Delay, d2		27.8			1.5			24.2			0.5	
Delay (s)		59.0			30.6			36.1			5.7	
Level of Service		E			C			D			A	
Approach Delay (s)		59.0			30.6			36.1			5.7	
Approach LOS		E			C			D			A	

Intersection Summary			
HCM Average Control Delay	26.7	HCM Level of Service	C
HCM Volume to Capacity ratio	0.98		
Actuated Cycle Length (s)	80.0	Sum of lost time (s)	8.0
Intersection Capacity Utilization	112.1%	ICU Level of Service	H
Analysis Period (min)	15		
c Critical Lane Group			

Movement	EBL	EBT	EBR	WBL	WBT	WBR	NBL	NBT	NBR	SBL	SBT	SBR
Lane Configurations												
Ideal Flow (vphpl)	1900	1900	1900	1900	1900	1900	1900	1900	1900	1900	1900	1900
Total Lost time (s)	4.0	4.0		4.0	4.0		4.0	4.0		4.0	4.0	
Lane Util. Factor	1.00	0.95		1.00	0.95		1.00	1.00		1.00	1.00	
Frpb, ped/bikes	1.00	1.00		1.00	1.00		1.00	1.00		1.00	1.00	
Flpb, ped/bikes	1.00	1.00		1.00	1.00		0.98	1.00		1.00	1.00	
Frt	1.00	0.98		1.00	0.98		1.00	0.99		1.00	0.98	
Flt Protected	0.95	1.00		0.95	1.00		0.95	1.00		0.95	1.00	
Satd. Flow (prot)	1765	3463		1768	3455		1741	1832		1766	1825	
Flt Permitted	0.12	1.00		0.12	1.00		0.52	1.00		0.22	1.00	
Satd. Flow (perm)	232	3463		233	3455		960	1832		412	1825	
Volume (vph)	90	1100	160	80	880	130	180	560	60	100	250	30
Peak-hour factor, PHF	0.95	0.95	0.95	0.95	0.95	0.95	0.95	0.95	0.95	0.95	0.95	0.95
Adj. Flow (vph)	95	1158	168	84	926	137	189	589	63	105	263	32
RTOR Reduction (vph)	0	14	0	0	14	0	0	5	0	0	6	0
Lane Group Flow (vph)	95	1312	0	84	1049	0	189	647	0	105	290	0
Confl. Peds. (#/hr)	12		12	12		12	42		12	12		42
Turn Type	Perm			Perm			Perm			Perm		
Protected Phases		4			8			2			6	
Permitted Phases	4			8			2			6		
Actuated Green, G (s)	33.0	33.0		33.0	33.0		40.5	40.5		40.5	40.5	
Effective Green, g (s)	32.0	32.0		32.0	32.0		40.0	40.0		40.0	40.0	
Actuated g/C Ratio	0.40	0.40		0.40	0.40		0.50	0.50		0.50	0.50	
Clearance Time (s)	3.0	3.0		3.0	3.0		3.5	3.5		3.5	3.5	
Lane Grp Cap (vph)	93	1385		93	1382		480	916		206	913	
v/s Ratio Prot		0.38			0.30			c0.35			0.16	
v/s Ratio Perm	c0.41			0.36			0.20			0.25		
v/c Ratio	1.02	0.95		0.90	0.76		0.39	0.71		0.51	0.32	
Uniform Delay, d1	24.0	23.2		22.5	20.7		12.5	15.5		13.4	11.9	
Progression Factor	1.00	1.00		1.73	1.80		1.64	1.64		1.00	1.00	
Incremental Delay, d2	99.3	14.5		41.3	1.8		0.2	0.4		8.7	0.9	
Delay (s)	123.3	37.6		80.1	39.0		20.6	25.7		22.2	12.8	
Level of Service	F	D		F	D		C	C		C	B	
Approach Delay (s)		43.4			42.0			24.6			15.3	
Approach LOS		D			D			C			B	

Intersection Summary			
HCM Average Control Delay	35.9	HCM Level of Service	D
HCM Volume to Capacity ratio	0.85		
Actuated Cycle Length (s)	80.0	Sum of lost time (s)	8.0
Intersection Capacity Utilization	95.9%	ICU Level of Service	F
Analysis Period (min)	15		
c Critical Lane Group			

Movement	EBL	EBT	EBR	WBL	WBT	WBR	NBL	NBT	NBR	SBL	SBT	SBR
Lane Configurations												
Ideal Flow (vphpl)	1900	1900	1900	1900	1900	1900	1900	1900	1900	1900	1900	1900
Total Lost time (s)	4.0	4.0		4.0	4.0			4.0			4.0	
Lane Util. Factor	1.00	0.95		1.00	0.95			0.95			0.95	
Frpb, ped/bikes	1.00	0.99		1.00	1.00			1.00			1.00	
Flpb, ped/bikes	1.00	1.00		1.00	1.00			1.00			1.00	
Frt	1.00	0.99		1.00	0.99			0.98			0.97	
Flt Protected	0.95	1.00		0.95	1.00			0.99			0.99	
Satd. Flow (prot)	1764	3456		1770	3501			3442			3395	
Flt Permitted	0.16	1.00		0.16	1.00			0.84			0.88	
Satd. Flow (perm)	297	3456		298	3501			2917			2995	
Volume (vph)	60	1130	120	60	1000	60	90	330	50	30	160	50
Peak-hour factor, PHF	0.99	0.99	0.99	0.99	0.99	0.99	0.99	0.99	0.99	0.99	0.99	0.99
Adj. Flow (vph)	61	1141	121	61	1010	61	91	333	51	30	162	51
RTOR Reduction (vph)	0	10	0	0	6	0	0	1	0	0	4	0
Lane Group Flow (vph)	61	1252	0	61	1066	0	0	474	0	0	239	0
Confl. Peds. (#/hr)	24		78	78		24	8		6	6		8
Turn Type	Perm			Perm			Perm			Perm		
Protected Phases		4			8			2			6	
Permitted Phases	4			8			2			6		
Actuated Green, G (s)	24.0	24.0		24.0	24.0			46.0			46.0	
Effective Green, g (s)	25.0	25.0		25.0	25.0			47.0			47.0	
Actuated g/C Ratio	0.31	0.31		0.31	0.31			0.59			0.59	
Clearance Time (s)	5.0	5.0		5.0	5.0			5.0			5.0	
Lane Grp Cap (vph)	93	1080		93	1094			1714			1760	
v/s Ratio Prot		c0.36			0.30							
v/s Ratio Perm	0.21			0.20				c0.16			0.08	
v/c Ratio	0.66	1.16		0.66	0.97			0.28			0.14	
Uniform Delay, d1	23.8	27.5		23.8	27.2			8.1			7.4	
Progression Factor	0.63	0.56		0.81	0.84			1.06			1.00	
Incremental Delay, d2	14.0	76.2		20.2	16.1			0.2			0.2	
Delay (s)	29.0	91.6		39.4	38.9			8.8			7.6	
Level of Service	C	F		D	D			A			A	
Approach Delay (s)		88.7			39.0			8.8			7.6	
Approach LOS		F			D			A			A	

Intersection Summary			
HCM Average Control Delay	52.8	HCM Level of Service	D
HCM Volume to Capacity ratio	0.58		
Actuated Cycle Length (s)	80.0	Sum of lost time (s)	8.0
Intersection Capacity Utilization	79.0%	ICU Level of Service	D
Analysis Period (min)	15		
c Critical Lane Group			

Movement	EBL	EBT	EBR	WBL	WBT	WBR	NBL	NBT	NBR	SBL	SBT	SBR
Lane Configurations												
Ideal Flow (vphpl)	1900	1900	1900	1900	1900	1900	1900	1900	1900	1900	1900	1900
Total Lost time (s)	4.0	4.0		4.0	4.0			4.0			4.0	
Lane Util. Factor	1.00	0.95		1.00	0.95			0.95			0.95	
Frpb, ped/bikes	1.00	1.00		1.00	1.00			0.99			1.00	
Flpb, ped/bikes	1.00	1.00		1.00	1.00			1.00			1.00	
Frt	1.00	0.99		1.00	0.98			0.97			0.98	
Flt Protected	0.95	1.00		0.95	1.00			0.99			0.99	
Satd. Flow (prot)	1767	3510		1763	3463			3395			3413	
Flt Permitted	0.11	1.00		0.11	1.00			0.86			0.63	
Satd. Flow (perm)	213	3510		212	3463			2925			2174	
Volume (vph)	90	1110	50	60	1020	140	80	550	160	100	240	60
Peak-hour factor, PHF	0.95	0.95	0.95	0.95	0.95	0.95	0.95	0.95	0.95	0.95	0.95	0.95
Adj. Flow (vph)	95	1168	53	63	1074	147	84	579	168	105	253	63
RTOR Reduction (vph)	0	4	0	0	14	0	0	12	0	0	18	0
Lane Group Flow (vph)	95	1217	0	63	1208	0	0	819	0	0	403	0
Confl. Peds. (#/hr)	8		39	39		8			25	25		
Turn Type	Perm			Perm			Perm			Perm		
Protected Phases		4			8			2			6	
Permitted Phases	4			8			2			6		
Actuated Green, G (s)	35.5	35.5		35.5	35.5			38.0			38.0	
Effective Green, g (s)	35.0	35.0		35.0	35.0			37.0			37.0	
Actuated g/C Ratio	0.44	0.44		0.44	0.44			0.46			0.46	
Clearance Time (s)	3.5	3.5		3.5	3.5			3.0			3.0	
Lane Grp Cap (vph)	93	1536		93	1515			1353			1005	
v/s Ratio Prot		0.35			0.35							
v/s Ratio Perm	c0.45			0.30				c0.28			0.19	
v/c Ratio	1.02	0.79		0.68	0.80			0.61			0.40	
Uniform Delay, d1	22.5	19.4		18.0	19.4			16.0			14.2	
Progression Factor	1.04	1.05		1.00	1.00			1.31			1.00	
Incremental Delay, d2	33.5	0.4		33.1	4.4			1.8			1.2	
Delay (s)	56.9	20.6		51.1	23.9			22.8			15.4	
Level of Service	E	C		D	C			C			B	
Approach Delay (s)		23.3			25.2			22.8			15.4	
Approach LOS		C			C			C			B	

Intersection Summary			
HCM Average Control Delay	23.0	HCM Level of Service	C
HCM Volume to Capacity ratio	0.81		
Actuated Cycle Length (s)	80.0	Sum of lost time (s)	8.0
Intersection Capacity Utilization	92.5%	ICU Level of Service	F
Analysis Period (min)	15		
c Critical Lane Group			

Movement	EBT	EBR	WBL	WBT	NBL	NBR
Lane Configurations						
Ideal Flow (vphpl)	1900	1900	1900	1900	1900	1900
Total Lost time (s)	4.0		4.0	4.0		
Lane Util. Factor	0.95		1.00	0.95		
Frpb, ped/bikes	0.98		1.00	1.00		
Flpb, ped/bikes	1.00		1.00	1.00		
Frt	0.99		1.00	1.00		
Flt Protected	1.00		0.95	1.00		
Satd. Flow (prot)	3424		1770	3539		
Flt Permitted	1.00		0.95	1.00		
Satd. Flow (perm)	3424		1770	3539		
Volume (vph)	1280	80	80	1210	0	0
Peak-hour factor, PHF	0.97	0.97	0.97	0.97	0.97	0.97
Adj. Flow (vph)	1320	82	82	1247	0	0
RTOR Reduction (vph)	8	0	0	0	0	0
Lane Group Flow (vph)	1394	0	82	1247	0	0
Confl. Peds. (#/hr)		213	348			
Turn Type			Prot			
Protected Phases	4		3	8		
Permitted Phases						
Actuated Green, G (s)	27.0		25.0	60.0		
Effective Green, g (s)	27.0		25.0	60.0		
Actuated g/C Ratio	0.45		0.42	1.00		
Clearance Time (s)	4.0		4.0	4.0		
Lane Grp Cap (vph)	1541		738	3539		
v/s Ratio Prot	c0.41		0.05	c0.35		
v/s Ratio Perm						
v/c Ratio	0.90		0.11	0.35		
Uniform Delay, d1	15.3		10.7	0.0		
Progression Factor	1.00		1.00	1.00		
Incremental Delay, d2	9.1		0.3	0.3		
Delay (s)	24.5		11.0	0.3		
Level of Service	C		B	A		
Approach Delay (s)	24.5			0.9	0.0	
Approach LOS	C			A	A	

Intersection Summary			
HCM Average Control Delay	13.0	HCM Level of Service	B
HCM Volume to Capacity ratio	0.62		
Actuated Cycle Length (s)	60.0	Sum of lost time (s)	4.0
Intersection Capacity Utilization	49.5%	ICU Level of Service	A
Analysis Period (min)	15		
c Critical Lane Group			

Movement	EBT	EBR	WBL	WBT	NBL	NBR
Lane Configurations						
Sign Control	Free			Free	Stop	
Grade	0%			0%	0%	
Volume (veh/h)	1200	80	0	1290	0	70
Peak Hour Factor	0.95	0.95	0.95	0.95	0.95	0.95
Hourly flow rate (vph)	1263	84	0	1358	0	74
Pedestrians				109	109	
Lane Width (ft)				12.0	12.0	
Walking Speed (ft/s)				4.0	4.0	
Percent Blockage				9	9	
Right turn flare (veh)						
Median type					None	
Median storage veh)						
Upstream signal (ft)	81			406		
pX, platoon unblocked			0.62		0.68	0.62
vC, conflicting volume			1456		2093	892
vC1, stage 1 conf vol						
vC2, stage 2 conf vol						
vCu, unblocked vol			1120		1555	205
tC, single (s)			4.1		6.8	6.9
tC, 2 stage (s)						
tF (s)			2.2		3.5	3.3
p0 queue free %			100		100	82
cM capacity (veh/h)			348		64	409

Direction, Lane #	EB 1	EB 2	WB 1	WB 2	NB 1
Volume Total	842	505	679	679	74
Volume Left	0	0	0	0	0
Volume Right	0	84	0	0	74
cSH	1700	1700	1700	1700	409
Volume to Capacity	0.50	0.30	0.40	0.40	0.18
Queue Length 95th (ft)	0	0	0	0	16
Control Delay (s)	0.0	0.0	0.0	0.0	15.7
Lane LOS					C
Approach Delay (s)	0.0		0.0		15.7
Approach LOS					C

Intersection Summary			
Average Delay	0.4		
Intersection Capacity Utilization	56.0%	ICU Level of Service	B
Analysis Period (min)	15		

Movement	EBT	EBR	WBL	WBT	NBL	NBR
Lane Configurations						
Sign Control	Free			Free	Stop	
Grade	0%			0%	0%	
Volume (veh/h)	1260	10	0	1290	0	60
Peak Hour Factor	0.95	0.95	0.95	0.95	0.95	0.95
Hourly flow rate (vph)	1326	11	0	1358	0	63
Pedestrians				109	109	
Lane Width (ft)				12.0	12.0	
Walking Speed (ft/s)				4.0	4.0	
Percent Blockage				9	9	
Right turn flare (veh)						
Median type					None	
Median storage veh)						
Upstream signal (ft)	298			189		
pX, platoon unblocked			0.63		0.70	0.63
vC, conflicting volume			1446		2120	886
vC1, stage 1 conf vol						
vC2, stage 2 conf vol						
vCu, unblocked vol			1119		1527	230
tC, single (s)			4.1		6.8	6.9
tC, 2 stage (s)						
tF (s)			2.2		3.5	3.3
p0 queue free %			100		100	84
cM capacity (veh/h)			355		69	402

Direction, Lane #	EB 1	EB 2	WB 1	WB 2	NB 1
Volume Total	884	453	679	679	63
Volume Left	0	0	0	0	0
Volume Right	0	11	0	0	63
cSH	1700	1700	1700	1700	402
Volume to Capacity	0.52	0.27	0.40	0.40	0.16
Queue Length 95th (ft)	0	0	0	0	14
Control Delay (s)	0.0	0.0	0.0	0.0	15.6
Lane LOS					C
Approach Delay (s)	0.0		0.0		15.6
Approach LOS					C

Intersection Summary			
Average Delay	0.4		
Intersection Capacity Utilization	55.4%	ICU Level of Service	B
Analysis Period (min)	15		

Movement	EBL	EBT	EBR	WBL	WBT	WBR	NBL	NBT	NBR	SBL	SBT	SBR
Lane Configurations												
Ideal Flow (vphpl)	1900	1900	1900	1900	1900	1900	1900	1900	1900	1900	1900	1900
Total Lost time (s)	4.0	4.0		4.0	4.0		4.0	4.0		4.0	4.0	
Lane Util. Factor	1.00	0.95		1.00	0.95		1.00	0.95		1.00	0.95	
Frpb, ped/bikes	1.00	0.99		1.00	0.97		1.00	0.99		1.00	0.96	
Flpb, ped/bikes	0.94	1.00		1.00	1.00		1.00	1.00		1.00	1.00	
Frt	1.00	0.98		1.00	0.98		1.00	0.99		1.00	0.95	
Flt Protected	0.95	1.00		0.95	1.00		0.95	1.00		0.95	1.00	
Satd. Flow (prot)	1669	3433		1770	3334		1770	3482		1770	3247	
Flt Permitted	0.26	1.00		0.15	1.00		0.95	1.00		0.95	1.00	
Satd. Flow (perm)	449	3433		287	3334		1770	3482		1770	3247	
Volume (vph)	280	920	120	60	550	110	470	1390	100	130	630	270
Peak-hour factor, PHF	0.98	0.98	0.98	0.98	0.98	0.98	0.98	0.98	0.98	0.98	0.98	0.98
Adj. Flow (vph)	286	939	122	61	561	112	480	1418	102	133	643	276
RTOR Reduction (vph)	0	13	0	0	21	0	0	6	0	0	27	0
Lane Group Flow (vph)	286	1048	0	61	652	0	480	1514	0	133	892	0
Confl. Peds. (#/hr)	94		86	86		94			40			111
Turn Type	Perm			Perm			Prot			Prot		
Protected Phases		4			8		5	2		1	6	
Permitted Phases	4			8								
Actuated Green, G (s)	25.5	25.5		25.5	25.5		13.5	32.2		8.8	27.5	
Effective Green, g (s)	26.0	26.0		26.0	26.0		14.0	32.7		9.3	28.0	
Actuated g/C Ratio	0.32	0.32		0.32	0.32		0.18	0.41		0.12	0.35	
Clearance Time (s)	4.5	4.5		4.5	4.5		4.5	4.5		4.5	4.5	
Vehicle Extension (s)	2.0	2.0		2.0	2.0		2.0	2.0		2.0	2.0	
Lane Grp Cap (vph)	146	1116		93	1084		310	1423		206	1136	
v/s Ratio Prot		0.31			0.20		c0.27	c0.43		0.08	0.27	
v/s Ratio Perm	c0.64			0.21								
v/c Ratio	1.96	0.94		0.66	0.60		1.55	1.06		0.65	0.79	
Uniform Delay, d1	27.0	26.2		23.2	22.7		33.0	23.6		33.8	23.3	
Progression Factor	1.00	1.00		1.00	1.00		1.00	1.00		1.00	1.00	
Incremental Delay, d2	455.4	14.3		12.0	0.6		262.2	42.9		5.1	5.5	
Delay (s)	482.4	40.5		35.1	23.3		295.2	66.6		38.9	28.8	
Level of Service	F	D		D	C		F	E		D	C	
Approach Delay (s)		134.3			24.3			121.4			30.1	
Approach LOS		F			C			F			C	

Intersection Summary			
HCM Average Control Delay	92.2	HCM Level of Service	F
HCM Volume to Capacity ratio	1.46		
Actuated Cycle Length (s)	80.0	Sum of lost time (s)	8.0
Intersection Capacity Utilization	102.5%	ICU Level of Service	G
Analysis Period (min)	15		

c Critical Lane Group

Movement	EBL	EBR	NBL	NBT	SBT	SBR
Lane Configurations						
Sign Control	Stop			Free	Free	
Grade	0%			0%	0%	
Volume (veh/h)	20	80	20	1920	810	20
Peak Hour Factor	0.96	0.96	0.96	0.96	0.96	0.96
Hourly flow rate (vph)	21	83	21	2000	844	21
Pedestrians	100			100	100	
Lane Width (ft)	12.0			12.0	12.0	
Walking Speed (ft/s)	4.0			4.0	4.0	
Percent Blockage	8			8	8	
Right turn flare (veh)						
Median type	None					
Median storage veh)						
Upstream signal (ft)				396	625	
pX, platoon unblocked	0.73	0.87	0.87			
vC, conflicting volume	2096	632	965			
vC1, stage 1 conf vol						
vC2, stage 2 conf vol						
vCu, unblocked vol	1606	431	812			
tC, single (s)	6.8	6.9	4.1			
tC, 2 stage (s)						
tF (s)	3.5	3.3	2.2			
p0 queue free %	64	80	97			
cM capacity (veh/h)	57	419	647			

Direction, Lane #	EB 1	NB 1	NB 2	NB 3	SB 1	SB 2
Volume Total	104	21	1000	1000	562	302
Volume Left	21	21	0	0	0	0
Volume Right	83	0	0	0	0	21
cSH	185	647	1700	1700	1700	1700
Volume to Capacity	0.56	0.03	0.59	0.59	0.33	0.18
Queue Length 95th (ft)	75	2	0	0	0	0
Control Delay (s)	47.0	10.7	0.0	0.0	0.0	0.0
Lane LOS	E	B				
Approach Delay (s)	47.0	0.1			0.0	
Approach LOS	E					

Intersection Summary			
Average Delay	1.7		
Intersection Capacity Utilization	73.0%	ICU Level of Service	C
Analysis Period (min)	15		

Movement	WBL	WBR	NBT	NBR	SBL	SBT
Lane Configurations						
Sign Control	Stop		Free			Free
Grade	0%		0%			0%
Volume (veh/h)	30	40	1900	40	20	870
Peak Hour Factor	0.95	0.95	0.95	0.95	0.95	0.95
Hourly flow rate (vph)	32	42	2000	42	21	916
Pedestrians	52		52			45
Lane Width (ft)	12.0		12.0			12.0
Walking Speed (ft/s)	4.0		4.0			4.0
Percent Blockage	4		4			4
Right turn flare (veh)						
Median type	None					
Median storage veh)						
Upstream signal (ft)			230			791
pX, platoon unblocked	0.69	0.66			0.66	
vC, conflicting volume	2625	1118			2094	
vC1, stage 1 conf vol						
vC2, stage 2 conf vol						
vCu, unblocked vol	2675	672			2142	
tC, single (s)	6.8	6.9			4.1	
tC, 2 stage (s)						
tF (s)	3.5	3.3			2.2	
p0 queue free %	0	83			87	
cM capacity (veh/h)	10	244			158	

Direction, Lane #	WB 1	NB 1	NB 2	SB 1	SB 2	SB 3
Volume Total	74	1333	709	21	458	458
Volume Left	32	0	0	21	0	0
Volume Right	42	0	42	0	0	0
cSH	22	1700	1700	158	1700	1700
Volume to Capacity	3.39	0.78	0.42	0.13	0.27	0.27
Queue Length 95th (ft)	Err	0	0	11	0	0
Control Delay (s)	Err	0.0	0.0	31.2	0.0	0.0
Lane LOS	F			D		
Approach Delay (s)	Err	0.0		0.7		
Approach LOS	F					

Intersection Summary			
Average Delay	241.6		
Intersection Capacity Utilization	72.3%	ICU Level of Service	C
Analysis Period (min)	15		

Movement	EBL	EBT	EBR	WBL	WBT	WBR	NBL	NBT	NBR	SBL	SBT	SBR
Lane Configurations												
Ideal Flow (vphpl)	1900	1900	1900	1900	1900	1900	1900	1900	1900	1900	1900	1900
Total Lost time (s)		4.0		4.0	4.0			4.0		4.0	4.0	
Lane Util. Factor		0.91		1.00	0.95			1.00		1.00	1.00	
Frpb, ped/bikes		1.00		1.00	1.00			1.00		1.00	0.99	
Flpb, ped/bikes		1.00		1.00	1.00			1.00		1.00	1.00	
Frt		0.99		1.00	0.98			0.98		1.00	0.98	
Flt Protected		0.99		0.95	1.00			0.99		0.95	1.00	
Satd. Flow (prot)		5012		1768	3452			1793		1770	1805	
Flt Permitted		0.65		0.23	1.00			0.28		0.24	1.00	
Satd. Flow (perm)		3269		427	3452			511		444	1805	
Volume (vph)	160	840	40	90	1330	220	190	520	120	80	400	70
Peak-hour factor, PHF	0.98	0.98	0.98	0.98	0.98	0.98	0.98	0.98	0.98	0.98	0.98	0.98
Adj. Flow (vph)	163	857	41	92	1357	224	194	531	122	82	408	71
RTOR Reduction (vph)	0	5	0	0	17	0	0	8	0	0	8	0
Lane Group Flow (vph)	0	1056	0	92	1565	0	0	839	0	82	471	0
Confl. Peds. (#/hr)	24		4	4		24	48		12	12		48
Turn Type	Perm			Perm			Perm			Perm		
Protected Phases		4			8			2			6	
Permitted Phases	4			8			2			6		
Actuated Green, G (s)		46.0		46.0	46.0			24.0		24.0	24.0	
Effective Green, g (s)		47.0		47.0	47.0			25.0		25.0	25.0	
Actuated g/C Ratio		0.59		0.59	0.59			0.31		0.31	0.31	
Clearance Time (s)		5.0		5.0	5.0			5.0		5.0	5.0	
Lane Grp Cap (vph)		1921		251	2028			160		139	564	
v/s Ratio Prot					c0.45						0.26	
v/s Ratio Perm		0.32		0.22				c1.64		0.18		
v/c Ratio		1.66dl		0.37	0.77			5.25		0.59	0.84	
Uniform Delay, d1		10.1		8.7	12.4			27.5		23.2	25.6	
Progression Factor		1.00		1.60	1.65			1.00		0.77	0.79	
Incremental Delay, d2		1.1		3.2	2.3			1924.7		14.3	11.6	
Delay (s)		11.2		17.0	22.8			1952.2		32.1	32.0	
Level of Service		B		B	C			F		C	C	
Approach Delay (s)		11.2			22.5			1952.2			32.0	
Approach LOS		B			C			F			C	

Intersection Summary			
HCM Average Control Delay	415.5	HCM Level of Service	F
HCM Volume to Capacity ratio	2.33		
Actuated Cycle Length (s)	80.0	Sum of lost time (s)	8.0
Intersection Capacity Utilization	167.0%	ICU Level of Service	H
Analysis Period (min)	15		

dl Defacto Left Lane. Recode with 1 though lane as a left lane.
c Critical Lane Group

Movement	EBL	EBT	EBR	WBL	WBT	WBR	NBL	NBT	NBR	SBL	SBT	SBR
Lane Configurations												
Ideal Flow (vphpl)	1900	1900	1900	1900	1900	1900	1900	1900	1900	1900	1900	1900
Total Lost time (s)		4.0			4.0		4.0	4.0		4.0	4.0	
Lane Util. Factor		0.91			0.91		1.00	1.00		1.00	1.00	
Frpb, ped/bikes		1.00			1.00		1.00	1.00		1.00	1.00	
Flpb, ped/bikes		1.00			1.00		1.00	1.00		1.00	1.00	
Frt		0.99			0.99		1.00	0.97		1.00	0.98	
Flt Protected		1.00			1.00		0.95	1.00		0.95	1.00	
Satd. Flow (prot)		4996			5015		1770	1790		1766	1820	
Flt Permitted		0.76			0.79		0.40	1.00		0.20	1.00	
Satd. Flow (perm)		3798			3971		742	1790		363	1820	
Volume (vph)	60	780	70	100	1360	110	140	330	100	90	220	40
Peak-hour factor, PHF	0.95	0.95	0.95	0.95	0.95	0.95	0.95	0.95	0.95	0.95	0.95	0.95
Adj. Flow (vph)	63	821	74	105	1432	116	147	347	105	95	232	42
RTOR Reduction (vph)	0	12	0	0	11	0	0	13	0	0	8	0
Lane Group Flow (vph)	0	946	0	0	1642	0	147	439	0	95	266	0
Confl. Peds. (#/hr)			12	12					6	6		
Turn Type	Perm			Perm			Perm			Perm		
Protected Phases		4			8			2			6	
Permitted Phases	4			8			2			6		
Actuated Green, G (s)		51.5			51.5		20.5	20.5		20.5	20.5	
Effective Green, g (s)		51.5			51.5		20.5	20.5		20.5	20.5	
Actuated g/C Ratio		0.64			0.64		0.26	0.26		0.26	0.26	
Clearance Time (s)		4.0			4.0		4.0	4.0		4.0	4.0	
Lane Grp Cap (vph)		2445			2556		190	459		93	466	
v/s Ratio Prot								0.25			0.15	
v/s Ratio Perm		0.25			c0.41		0.20			c0.26		
v/c Ratio		0.39			0.64		0.77	0.96		1.02	0.57	
Uniform Delay, d1		6.8			8.7		27.6	29.3		29.8	25.9	
Progression Factor		1.18			2.00		1.00	1.00		1.19	1.19	
Incremental Delay, d2		0.0			1.0		25.8	32.3		91.7	4.2	
Delay (s)		8.0			18.2		53.4	61.6		127.1	35.2	
Level of Service		A			B		D	E		F	D	
Approach Delay (s)		8.0			18.2			59.6			58.8	
Approach LOS		A			B			E			E	

Intersection Summary			
HCM Average Control Delay	26.6	HCM Level of Service	C
HCM Volume to Capacity ratio	0.75		
Actuated Cycle Length (s)	80.0	Sum of lost time (s)	8.0
Intersection Capacity Utilization	99.3%	ICU Level of Service	F
Analysis Period (min)	15		
c Critical Lane Group			

Movement	EBL	EBT	EBR	WBL	WBT	WBR	NBL	NBT	NBR	SBL	SBT	SBR
Lane Configurations												
Ideal Flow (vphpl)	1900	1900	1900	1900	1900	1900	1900	1900	1900	1900	1900	1900
Total Lost time (s)		4.0			4.0			4.0			4.0	
Lane Util. Factor		0.91			0.91			0.95			0.95	
Frpb, ped/bikes		1.00			1.00			1.00			1.00	
Flpb, ped/bikes		1.00			1.00			1.00			1.00	
Frt		0.99			0.98			0.98			0.98	
Flt Protected		1.00			1.00			0.99			0.99	
Satd. Flow (prot)		5015			4946			3446			3402	
Flt Permitted		0.69			0.84			0.80			0.60	
Satd. Flow (perm)		3498			4151			2760			2065	
Volume (vph)	90	850	50	70	1430	270	80	430	60	90	210	50
Peak-hour factor, PHF	0.99	0.99	0.99	0.99	0.99	0.99	0.99	0.99	0.99	0.99	0.99	0.99
Adj. Flow (vph)	91	859	51	71	1444	273	81	434	61	91	212	51
RTOR Reduction (vph)	0	7	0	0	32	0	0	11	0	0	17	0
Lane Group Flow (vph)	0	994	0	0	1756	0	0	565	0	0	337	0
Confl. Peds. (#/hr)	9		17	17		9	12		10	10		12
Turn Type	Perm			Perm			Perm			Perm		
Protected Phases		4			8			2			6	
Permitted Phases	4			8			2			6		
Actuated Green, G (s)		50.0			50.0			19.0			19.0	
Effective Green, g (s)		51.5			51.5			20.5			20.5	
Actuated g/C Ratio		0.64			0.64			0.26			0.26	
Clearance Time (s)		5.5			5.5			5.5			5.5	
Lane Grp Cap (vph)		2252			2672			707			529	
v/s Ratio Prot												
v/s Ratio Perm		0.28			c0.42			c0.20			0.16	
v/c Ratio		0.44			0.66			0.80			0.64	
Uniform Delay, d1		7.1			8.8			27.8			26.4	
Progression Factor		1.61			1.00			1.00			1.34	
Incremental Delay, d2		0.6			1.3			9.2			5.7	
Delay (s)		12.0			10.1			37.0			41.3	
Level of Service		B			B			D			D	
Approach Delay (s)		12.0			10.1			37.0			41.3	
Approach LOS		B			B			D			D	

Intersection Summary			
HCM Average Control Delay	17.7	HCM Level of Service	B
HCM Volume to Capacity ratio	0.70		
Actuated Cycle Length (s)	80.0	Sum of lost time (s)	8.0
Intersection Capacity Utilization	126.2%	ICU Level of Service	H
Analysis Period (min)	15		
c Critical Lane Group			

Movement	EBL	EBT	WBT	WBR	SBL	SBR
Lane Configurations						
Sign Control		Free	Free		Stop	
Grade		0%	0%		0%	
Volume (veh/h)	0	1030	1540	20	0	230
Peak Hour Factor	0.96	0.96	0.96	0.96	0.96	0.96
Hourly flow rate (vph)	0	1073	1604	21	0	240
Pedestrians		79			79	
Lane Width (ft)		12.0			12.0	
Walking Speed (ft/s)		4.0			4.0	
Percent Blockage		7			7	
Right turn flare (veh)						
Median type					None	
Median storage veh)						
Upstream signal (ft)		698	473			
pX, platoon unblocked	0.84				0.84	0.84
vC, conflicting volume	1704				2051	703
vC1, stage 1 conf vol						
vC2, stage 2 conf vol						
vCu, unblocked vol	1453				1849	258
tC, single (s)	4.1				6.8	6.9
tC, 2 stage (s)						
tF (s)	2.2				3.5	3.3
p0 queue free %	100				100	56
cM capacity (veh/h)	361				52	541

Direction, Lane #	EB 1	EB 2	EB 3	WB 1	WB 2	WB 3	SB 1
Volume Total	358	358	358	642	642	342	240
Volume Left	0	0	0	0	0	0	0
Volume Right	0	0	0	0	0	21	240
cSH	1700	1700	1700	1700	1700	1700	541
Volume to Capacity	0.21	0.21	0.21	0.38	0.38	0.20	0.44
Queue Length 95th (ft)	0	0	0	0	0	0	56
Control Delay (s)	0.0	0.0	0.0	0.0	0.0	0.0	16.8
Lane LOS							C
Approach Delay (s)	0.0			0.0			16.8
Approach LOS							C

Intersection Summary			
Average Delay	1.4		
Intersection Capacity Utilization	56.5%	ICU Level of Service	B
Analysis Period (min)	15		

Movement	EBL	EBT	EBR	WBL	WBT	WBR	NBL	NBT	NBR	SBL	SBT	SBR
Lane Configurations												
Ideal Flow (vphpl)	1900	1900	1900	1900	1900	1900	1900	1900	1900	1900	1900	1900
Total Lost time (s)		4.0			4.0		4.0	4.0		4.0	4.0	
Lane Util. Factor		0.91			0.91		1.00	0.95		1.00	0.95	
Frpb, ped/bikes		1.00			0.99		1.00	0.99		1.00	0.99	
Flpb, ped/bikes		1.00			1.00		0.99	1.00		1.00	1.00	
Frt		0.99			0.96		1.00	0.99		1.00	0.98	
Flt Protected		0.99			1.00		0.95	1.00		0.95	1.00	
Satd. Flow (prot)		4939			4810		1748	3458		1770	3444	
Flt Permitted		0.67			0.73		0.23	1.00		0.11	1.00	
Satd. Flow (perm)		3358			3541		422	3458		212	3444	
Volume (vph)	300	660	80	110	1170	460	270	1180	110	220	600	90
Peak-hour factor, PHF	0.95	0.95	0.95	0.95	0.95	0.95	0.95	0.95	0.95	0.95	0.95	0.95
Adj. Flow (vph)	316	695	84	116	1232	484	284	1242	116	232	632	95
RTOR Reduction (vph)	0	6	0	0	1	0	0	7	0	0	11	0
Lane Group Flow (vph)	0	1089	0	0	1831	0	284	1351	0	232	716	0
Confl. Peds. (#/hr)	26		19			26	39		92	92		39
Turn Type	Perm			pm+pt			Perm			Perm		
Protected Phases		4		3	8			2			6	
Permitted Phases	4			8			2			6		
Actuated Green, G (s)		55.9			55.9		34.1	34.1		34.1	34.1	
Effective Green, g (s)		57.4			57.4		35.1	35.1		35.1	35.1	
Actuated g/C Ratio		0.57			0.57		0.35	0.35		0.35	0.35	
Clearance Time (s)		5.5			5.5		5.0	5.0		5.0	5.0	
Vehicle Extension (s)		2.0			2.0		2.0	2.0		2.0	2.0	
Lane Grp Cap (vph)		1918			2022		147	1208		74	1203	
v/s Ratio Prot								0.39			0.21	
v/s Ratio Perm		0.32			c0.52		0.67			c1.09		
v/c Ratio		2.01dl			0.91		1.93	1.12		3.14	0.60	
Uniform Delay, d1		13.7			19.1		32.7	32.7		32.7	26.9	
Progression Factor		1.00			1.00		1.00	1.00		1.00	1.00	
Incremental Delay, d2		0.2			6.1		443.4	65.0		995.3	2.2	
Delay (s)		13.9			25.2		476.1	97.7		1028.0	29.0	
Level of Service		B			C		F	F		F	C	
Approach Delay (s)		13.9			25.2			163.1			270.7	
Approach LOS		B			C			F			F	

Intersection Summary			
HCM Average Control Delay	106.5	HCM Level of Service	F
HCM Volume to Capacity ratio	1.75		
Actuated Cycle Length (s)	100.5	Sum of lost time (s)	8.0
Intersection Capacity Utilization	118.7%	ICU Level of Service	H
Analysis Period (min)	15		

dl Defacto Left Lane. Recode with 1 though lane as a left lane.
c Critical Lane Group

Movement	EBL	EBT	EBR	WBL	WBT	WBR	NBL	NBT	NBR	SBL	SBT	SBR
Lane Configurations												
Ideal Flow (vphpl)	1900	1900	1900	1900	1900	1900	1900	1900	1900	1900	1900	1900
Total Lost time (s)		4.0			4.0			4.0	4.0		4.0	
Lane Util. Factor		0.91			0.91			1.00	1.00		1.00	
Frpb, ped/bikes		1.00			1.00			1.00	0.89		0.94	
Flpb, ped/bikes		1.00			1.00			0.96	1.00		0.98	
Frt		1.00			1.00			1.00	0.85		0.93	
Flt Protected		1.00			1.00			0.98	1.00		0.99	
Satd. Flow (prot)		5033			5026			1753	1406		1580	
Flt Permitted		0.78			0.78			0.78	1.00		0.90	
Satd. Flow (perm)		3946			3933			1394	1406		1440	
Volume (vph)	50	920	30	110	1590	50	100	100	200	40	40	90
Peak-hour factor, PHF	0.99	0.99	0.99	0.99	0.99	0.99	0.99	0.99	0.99	0.99	0.99	0.99
Adj. Flow (vph)	51	929	30	111	1606	51	101	101	202	40	40	91
RTOR Reduction (vph)	0	4	0	0	4	0	0	0	66	0	13	0
Lane Group Flow (vph)	0	1006	0	0	1764	0	0	202	136	0	158	0
Confl. Peds. (#/hr)	100		100	100		100	100		100	100		100
Turn Type	Perm			Perm			Perm		Perm	Perm		
Protected Phases		4			8			2			6	
Permitted Phases	4			8			2		2	6		
Actuated Green, G (s)		49.5			49.5			24.5	24.5		24.5	
Effective Green, g (s)		48.5			48.5			23.5	23.5		23.5	
Actuated g/C Ratio		0.61			0.61			0.29	0.29		0.29	
Clearance Time (s)		3.0			3.0			3.0	3.0		3.0	
Lane Grp Cap (vph)		2392			2384			409	413		423	
v/s Ratio Prot												
v/s Ratio Perm		0.25			c0.45			c0.14	0.10		0.11	
v/c Ratio		0.42			0.74			0.49	0.33		0.37	
Uniform Delay, d1		8.3			11.2			23.3	22.1		22.4	
Progression Factor		1.00			1.00			1.00	1.00		1.00	
Incremental Delay, d2		0.5			2.1			4.2	2.1		2.5	
Delay (s)		8.9			13.4			27.6	24.2		24.9	
Level of Service		A			B			C	C		C	
Approach Delay (s)		8.9			13.4			25.9			24.9	
Approach LOS		A			B			C			C	

Intersection Summary			
HCM Average Control Delay	14.1	HCM Level of Service	B
HCM Volume to Capacity ratio	0.66		
Actuated Cycle Length (s)	80.0	Sum of lost time (s)	8.0
Intersection Capacity Utilization	111.0%	ICU Level of Service	H
Analysis Period (min)	15		
c Critical Lane Group			

Movement	EBL	EBT	EBR	WBL	WBT	WBR	NBL	NBT	NBR	SBL	SBT	SBR
Lane Configurations												
Ideal Flow (vphpl)	1900	1900	1900	1900	1900	1900	1900	1900	1900	1900	1900	1900
Total Lost time (s)	4.0	4.0		4.0	4.0		4.0	4.0	4.0	4.0	4.0	4.0
Lane Util. Factor	1.00	0.91		1.00	0.91		1.00	0.95	1.00	1.00	0.95	1.00
Frpb, ped/bikes	1.00	0.98		1.00	0.99		1.00	1.00	0.94	1.00	1.00	0.95
Flpb, ped/bikes	1.00	1.00		1.00	1.00		1.00	1.00	1.00	1.00	1.00	1.00
Frt	1.00	0.98		1.00	0.97		1.00	1.00	0.85	1.00	1.00	0.85
Flt Protected	0.95	1.00		0.95	1.00		0.95	1.00	1.00	0.95	1.00	1.00
Satd. Flow (prot)	1770	4912		1770	4863		1770	3539	1489	1770	3539	1499
Flt Permitted	0.95	1.00		0.95	1.00		0.95	1.00	1.00	0.95	1.00	1.00
Satd. Flow (perm)	1770	4912		1770	4863		1770	3539	1489	1770	3539	1499
Volume (vph)	230	790	110	130	1230	360	310	1180	290	510	510	180
Peak-hour factor, PHF	0.95	0.95	0.95	0.95	0.95	0.95	0.95	0.95	0.95	0.95	0.95	0.95
Adj. Flow (vph)	242	832	116	137	1295	379	326	1242	305	537	537	189
RTOR Reduction (vph)	0	15	0	0	44	0	0	0	11	0	0	45
Lane Group Flow (vph)	242	933	0	137	1630	0	326	1242	294	537	537	144
Confl. Peds. (#/hr)			81			22			50			43
Turn Type	Prot			Prot			Prot		pm ov	Prot		pm ov
Protected Phases	7	4		3	8		5	2	3	1	6	7
Permitted Phases									2			6
Actuated Green, G (s)	12.0	33.2		12.8	34.0		25.4	33.0	45.8	25.0	32.6	44.6
Effective Green, g (s)	11.0	34.2		11.8	35.0		24.4	34.0	45.8	24.0	33.6	44.6
Actuated g/C Ratio	0.09	0.29		0.10	0.29		0.20	0.28	0.38	0.20	0.28	0.37
Clearance Time (s)	3.0	5.0		3.0	5.0		3.0	5.0	3.0	3.0	5.0	3.0
Vehicle Extension (s)	3.0	3.0		3.0	3.0		3.0	3.0	3.0	3.0	3.0	3.0
Lane Grp Cap (vph)	162	1400		174	1418		360	1003	618	354	991	607
v/s Ratio Prot	c0.14	0.19		0.08	c0.34		0.18	c0.35	0.05	c0.30	0.15	0.02
v/s Ratio Perm									0.15			0.07
v/c Ratio	1.49	0.67		0.79	1.15		0.91	1.24	0.48	1.52	0.54	0.24
Uniform Delay, d1	54.5	37.9		52.9	42.5		46.7	43.0	28.0	48.0	36.7	26.0
Progression Factor	1.00	1.00		1.00	1.00		1.00	1.00	1.00	1.00	1.00	1.00
Incremental Delay, d2	251.9	2.5		20.6	76.0		25.3	115.9	0.6	246.7	2.1	0.2
Delay (s)	306.4	40.4		73.4	118.5		71.9	158.9	28.6	294.7	38.8	26.2
Level of Service	F	D		E	F		E	F	C	F	D	C
Approach Delay (s)		94.5			115.0			122.5			145.7	
Approach LOS		F			F			F			F	

Intersection Summary			
HCM Average Control Delay	119.7	HCM Level of Service	F
HCM Volume to Capacity ratio	1.21		
Actuated Cycle Length (s)	120.0	Sum of lost time (s)	8.0
Intersection Capacity Utilization	119.2%	ICU Level of Service	H
Analysis Period (min)	15		
c Critical Lane Group			

Movement	EBL	EBT	EBR	WBL	WBT	WBR	NBL	NBT	NBR	SBL	SBT	SBR
Lane Configurations												
Ideal Flow (vphpl)	1900	1900	1900	1900	1900	1900	1900	1900	1900	1900	1900	1900
Total Lost time (s)		4.0			4.0		4.0	4.0		4.0	4.0	
Lane Util. Factor		1.00			1.00		1.00	0.95		1.00	0.95	
Frpb, ped/bikes		0.93			0.96		1.00	0.99		1.00	0.99	
Flpb, ped/bikes		0.98			0.97		0.96	1.00		0.98	1.00	
Frt		0.95			0.95		1.00	0.99		1.00	0.99	
Flt Protected		0.98			0.98		0.95	1.00		0.95	1.00	
Satd. Flow (prot)		1584			1618		1702	3486		1726	3447	
Flt Permitted		0.66			0.71		0.26	1.00		0.18	1.00	
Satd. Flow (perm)		1068			1178		461	3486		336	3447	
Volume (vph)	130	60	100	120	80	100	50	1070	50	40	830	70
Peak-hour factor, PHF	0.95	0.95	0.95	0.95	0.95	0.95	0.95	0.95	0.95	0.95	0.95	0.95
Adj. Flow (vph)	137	63	105	126	84	105	53	1126	53	42	874	74
RTOR Reduction (vph)	0	23	0	0	22	0	0	4	0	0	7	0
Lane Group Flow (vph)	0	282	0	0	293	0	53	1175	0	42	941	0
Confl. Peds. (#/hr)	100		100	100		100	100		100	100		100
Turn Type	Perm			Perm			Perm			Perm		
Protected Phases		4			4			2			6	
Permitted Phases	4			4			2			6		
Actuated Green, G (s)		23.6			23.6		54.4	54.4		54.4	54.4	
Effective Green, g (s)		23.1			23.1		53.9	53.9		53.9	53.9	
Actuated g/C Ratio		0.27			0.27		0.63	0.63		0.63	0.63	
Clearance Time (s)		3.5			3.5		3.5	3.5		3.5	3.5	
Vehicle Extension (s)		2.0			2.0		2.0	2.0		2.0	2.0	
Lane Grp Cap (vph)		290			320		292	2211		213	2186	
v/s Ratio Prot								c0.34			0.27	
v/s Ratio Perm		c0.26			0.25		0.11			0.13		
v/c Ratio		0.97			0.92		0.18	0.53		0.20	0.43	
Uniform Delay, d1		30.7			30.0		6.4	8.6		6.5	7.8	
Progression Factor		1.00			1.00		1.00	1.00		1.00	1.00	
Incremental Delay, d2		45.2			29.1		1.4	0.9		2.1	0.6	
Delay (s)		75.8			59.1		7.8	9.5		8.6	8.4	
Level of Service		E			E		A	A		A	A	
Approach Delay (s)		75.8			59.1			9.4			8.5	
Approach LOS		E			E			A			A	

Intersection Summary			
HCM Average Control Delay	21.7	HCM Level of Service	C
HCM Volume to Capacity ratio	0.66		
Actuated Cycle Length (s)	85.0	Sum of lost time (s)	8.0
Intersection Capacity Utilization	69.9%	ICU Level of Service	C
Analysis Period (min)	15		

c Critical Lane Group

Movement	EBL	EBT	EBR	WBL	WBT	WBR	NBL	NBT	NBR	SBL	SBT	SBR
Lane Configurations												
Ideal Flow (vphpl)	1900	1900	1900	1900	1900	1900	1900	1900	1900	1900	1900	1900
Total Lost time (s)	4.0	4.0		4.0	4.0		4.0	4.0		4.0	4.0	
Lane Util. Factor	1.00	0.95		1.00	0.95		1.00	0.95		1.00	0.95	
Frpb, ped/bikes	1.00	0.98		1.00	0.93		1.00	0.99		1.00	0.94	
Flpb, ped/bikes	1.00	1.00		1.00	1.00		0.96	1.00		0.98	1.00	
Frt	1.00	0.97		1.00	0.95		1.00	0.99		1.00	0.94	
Flt Protected	0.95	1.00		0.95	1.00		0.95	1.00		0.95	1.00	
Satd. Flow (prot)	1770	3370		1770	3154		1702	3488		1732	3129	
Flt Permitted	0.95	1.00		0.95	1.00		0.24	1.00		0.23	1.00	
Satd. Flow (perm)	1770	3370		1770	3154		427	3488		411	3129	
Volume (vph)	230	560	120	90	530	240	200	820	50	220	530	310
Peak-hour factor, PHF	0.98	0.98	0.98	0.98	0.98	0.98	0.98	0.98	0.98	0.98	0.98	0.98
Adj. Flow (vph)	235	571	122	92	541	245	204	837	51	224	541	316
RTOR Reduction (vph)	0	20	0	0	48	0	0	5	0	0	99	0
Lane Group Flow (vph)	235	673	0	92	738	0	204	883	0	224	758	0
Confl. Peds. (#/hr)			100			100	100		100	100		100
Turn Type	Prot			Prot			Perm			Perm		
Protected Phases	7	4		3	8			2			6	
Permitted Phases							2			6		
Actuated Green, G (s)	10.5	25.8		7.3	22.6		38.4	38.4		38.4	38.4	
Effective Green, g (s)	11.0	25.3		7.8	22.1		39.9	39.9		39.9	39.9	
Actuated g/C Ratio	0.13	0.30		0.09	0.26		0.47	0.47		0.47	0.47	
Clearance Time (s)	4.5	3.5		4.5	3.5		5.5	5.5		5.5	5.5	
Vehicle Extension (s)	2.0	2.0		2.0	2.0		2.0	2.0		2.0	2.0	
Lane Grp Cap (vph)	229	1003		162	820		200	1637		193	1469	
v/s Ratio Prot	c0.13	c0.20		0.05	c0.23			0.25			0.24	
v/s Ratio Perm							0.48			c0.55		
v/c Ratio	1.03	0.67		0.57	0.90		1.02	0.54		1.16	0.52	
Uniform Delay, d1	37.0	26.2		37.0	30.4		22.6	16.0		22.6	15.8	
Progression Factor	1.00	1.00		1.00	1.00		1.00	1.00		1.00	1.00	
Incremental Delay, d2	66.4	1.4		2.7	12.4		68.9	1.3		114.7	1.3	
Delay (s)	103.4	27.6		39.7	42.8		91.5	17.3		137.3	17.1	
Level of Service	F	C		D	D		F	B		F	B	
Approach Delay (s)		46.8			42.5			31.2			42.0	
Approach LOS		D			D			C			D	

Intersection Summary			
HCM Average Control Delay	40.2	HCM Level of Service	D
HCM Volume to Capacity ratio	1.10		
Actuated Cycle Length (s)	85.0	Sum of lost time (s)	16.0
Intersection Capacity Utilization	88.1%	ICU Level of Service	E
Analysis Period (min)	15		

c Critical Lane Group

APPENDIX H:
YEAR 2030 PLUS PROJCT CONDITIONS INTERSECTION LEVEL OF SERVICE CALCULATION WORKSHEETS

Movement	EBL	EBT	EBR	WBL	WBT	WBR	NBL	NBT	NBR	SBL	SBT	SBR
Lane Configurations												
Ideal Flow (vphpl)	1900	1900	1900	1900	1900	1900	1900	1900	1900	1900	1900	1900
Lane Width	12	12	12	12	12	12	16	16	16	16	16	16
Total Lost time (s)	4.0	4.0		4.0	4.0		2.0	2.0		2.0	2.0	
Lane Util. Factor	1.00	0.91		1.00	0.91		1.00	1.00		1.00	1.00	
Frpb, ped/bikes	1.00	0.99		1.00	0.99		1.00	0.99		1.00	0.98	
Flpb, ped/bikes	1.00	1.00		1.00	1.00		1.00	1.00		0.99	1.00	
Frt	1.00	0.97		1.00	0.98		1.00	0.97		1.00	0.94	
Flt Protected	0.95	1.00		0.95	1.00		0.95	1.00		0.95	1.00	
Satd. Flow (prot)	1770	4900		1770	4953		2006	2036		1986	1951	
Flt Permitted	0.95	1.00		0.95	1.00		0.10	1.00		0.42	1.00	
Satd. Flow (perm)	1770	4900		1770	4953		201	2036		874	1951	
Volume (vph)	310	1001	225	120	1660	250	200	299	70	180	425	290
Peak-hour factor, PHF	0.95	0.95	0.95	0.95	0.95	0.95	0.95	0.95	0.95	0.95	0.95	0.95
Adj. Flow (vph)	326	1054	237	126	1747	263	211	315	74	189	447	305
RTOR Reduction (vph)	0	29	0	0	16	0	0	7	0	0	21	0
Lane Group Flow (vph)	326	1262	0	126	1994	0	211	382	0	189	731	0
Confl. Peds. (#/hr)			10	10		10	10		10	10		10
Turn Type	Prot			Prot			pm+pt			Perm		
Protected Phases	7	4		3	8		5	2			6	
Permitted Phases							2			6		
Actuated Green, G (s)	17.0	47.9		13.1	44.0		48.5	48.5		39.5	39.5	
Effective Green, g (s)	17.0	47.9		13.1	44.0		49.0	49.0		40.0	40.0	
Actuated g/C Ratio	0.14	0.40		0.11	0.37		0.41	0.41		0.33	0.33	
Clearance Time (s)	4.0	4.0		4.0	4.0		4.0	2.5		2.5	2.5	
Vehicle Extension (s)	3.0	3.0		3.0	3.0		3.0	3.0		3.0	3.0	
Lane Grp Cap (vph)	251	1956		193	1816		187	831		291	650	
v/s Ratio Prot	c0.18	c0.26		0.07	c0.40		c0.07	0.19			c0.37	
v/s Ratio Perm							0.39			0.22		
v/c Ratio	1.30	0.65		0.65	1.10		1.13	0.46		0.65	1.13	
Uniform Delay, d1	51.5	29.2		51.3	38.0		58.7	25.9		34.0	40.0	
Progression Factor	1.00	1.00		1.00	1.00		1.00	1.00		1.00	1.00	
Incremental Delay, d2	160.6	1.7		7.7	53.2		104.5	0.4		4.9	75.0	
Delay (s)	212.1	30.8		59.0	91.2		163.2	26.3		39.0	115.0	
Level of Service	F	C		E	F		F	C		D	F	
Approach Delay (s)		67.4			89.3			74.4			99.7	
Approach LOS		E			F			E			F	

Intersection Summary			
HCM Average Control Delay	82.8	HCM Level of Service	F
HCM Volume to Capacity ratio	1.15		
Actuated Cycle Length (s)	120.0	Sum of lost time (s)	16.0
Intersection Capacity Utilization	119.9%	ICU Level of Service	H
Analysis Period (min)	15		
c Critical Lane Group			

Movement	EBL	EBT	EBR	WBL	WBT	WBR	NBL	NBT	NBR	SBL	SBT	SBR
Lane Configurations												
Ideal Flow (vphpl)	1900	1900	1900	1900	1900	1900	1900	1900	1900	1900	1900	1900
Total Lost time (s)		4.0		4.0	4.0			4.0		4.0	4.0	
Lane Util. Factor		1.00		0.95	0.95			0.95		1.00	0.95	
Frpb, ped/bikes		1.00		1.00	0.99			0.99		1.00	0.97	
Flpb, ped/bikes		1.00		1.00	1.00			1.00		1.00	1.00	
Frt		0.95		1.00	0.91			0.97		1.00	0.96	
Flt Protected		0.98		0.95	1.00			1.00		0.95	1.00	
Satd. Flow (prot)		1749		1681	1597			3417		1770	3291	
Flt Permitted		0.48		0.74	1.00			0.74		0.95	1.00	
Satd. Flow (perm)		847		1302	1597			2535		1770	3291	
Volume (vph)	10	10	10	354	330	470	10	1168	246	110	1329	460
Peak-hour factor, PHF	0.95	0.95	0.95	0.95	0.95	0.95	0.95	0.95	0.95	0.95	0.95	0.95
Adj. Flow (vph)	11	11	11	373	347	495	11	1229	259	116	1399	484
RTOR Reduction (vph)	0	10	0	0	57	0	0	18	0	0	36	0
Lane Group Flow (vph)	0	23	0	373	785	0	0	1481	0	116	1847	0
Confl. Peds. (#/hr)	4					4	44		12	12		44
Turn Type	Perm			Perm			Perm			Prot		
Protected Phases		7			8			2		1	6	
Permitted Phases	7			8			2					
Actuated Green, G (s)		5.1		26.5	26.5			32.5		7.9	44.9	
Effective Green, g (s)		5.6		27.0	27.0			33.0		8.4	45.4	
Actuated g/C Ratio		0.06		0.30	0.30			0.37		0.09	0.50	
Clearance Time (s)		4.5		4.5	4.5			4.5		4.5	4.5	
Vehicle Extension (s)		2.0		2.0	2.0			2.0		2.0	2.0	
Lane Grp Cap (vph)		53		391	479			930		165	1660	
v/s Ratio Prot										0.07	c0.56	
v/s Ratio Perm		c0.03		0.29	0.49			c0.58				
v/c Ratio		0.43		0.95	1.64			1.59		0.70	1.11	
Uniform Delay, d1		40.7		30.9	31.5			28.5		39.6	22.3	
Progression Factor		1.00		1.00	1.00			0.97		1.00	1.00	
Incremental Delay, d2		2.0		33.3	296.4			268.1		10.5	59.9	
Delay (s)		42.7		64.2	327.9			295.7		50.1	82.2	
Level of Service		D		E	F			F		D	F	
Approach Delay (s)		42.7			247.0			295.7			80.3	
Approach LOS		D			F			F			F	

Intersection Summary			
HCM Average Control Delay	190.8	HCM Level of Service	F
HCM Volume to Capacity ratio	1.49		
Actuated Cycle Length (s)	90.0	Sum of lost time (s)	16.0
Intersection Capacity Utilization	137.8%	ICU Level of Service	H
Analysis Period (min)	15		
c Critical Lane Group			

Movement	EBL	EBT	EBR	WBL	WBT	WBR	NBL	NBT	NBR	SBL	SBT	SBR
Lane Configurations												
Ideal Flow (vphpl)	1900	1900	1900	1900	1900	1900	1900	1900	1900	1900	1900	1900
Total Lost time (s)	4.0	4.0		4.0	4.0		4.0	4.0		4.0	4.0	
Lane Util. Factor	0.97	0.95		1.00	0.95		1.00	0.95		1.00	0.95	
Frpb, ped/bikes	1.00	0.99		1.00	0.99		1.00	0.99		1.00	0.99	
Flpb, ped/bikes	1.00	1.00		1.00	1.00		1.00	1.00		1.00	1.00	
Frt	1.00	0.98		1.00	0.96		1.00	0.97		1.00	0.98	
Flt Protected	0.95	1.00		0.95	1.00		0.95	1.00		0.95	1.00	
Satd. Flow (prot)	3433	3427		1770	3372		1770	3403		1770	3404	
Flt Permitted	0.95	1.00		0.95	1.00		0.95	1.00		0.95	1.00	
Satd. Flow (perm)	3433	3427		1770	3372		1770	3403		1770	3404	
Volume (vph)	460	650	111	140	820	320	120	674	140	320	1163	220
Peak-hour factor, PHF	0.96	0.96	0.96	0.96	0.96	0.96	0.96	0.96	0.96	0.96	0.96	0.96
Adj. Flow (vph)	479	677	116	146	854	333	125	702	146	333	1211	229
RTOR Reduction (vph)	0	15	0	0	46	0	0	20	0	0	17	0
Lane Group Flow (vph)	479	778	0	146	1141	0	125	828	0	333	1423	0
Confl. Peds. (#/hr)	6		24	24		6	36		28	28		36
Turn Type	Prot			Prot			Prot			Prot		
Protected Phases	7	4		3	8		5	2		1	6	
Permitted Phases												
Actuated Green, G (s)	13.0	28.4		10.1	25.5		9.6	23.5		11.0	24.9	
Effective Green, g (s)	12.5	29.4		9.6	26.5		9.1	24.5		10.5	25.9	
Actuated g/C Ratio	0.14	0.33		0.11	0.29		0.10	0.27		0.12	0.29	
Clearance Time (s)	3.5	5.0		3.5	5.0		3.5	5.0		3.5	5.0	
Vehicle Extension (s)	2.0	2.0		2.0	2.0		2.0	2.0		2.0	2.0	
Lane Grp Cap (vph)	477	1119		189	993		179	926		207	980	
v/s Ratio Prot	c0.14	c0.23		0.08	c0.34		0.07	0.24		c0.19	c0.42	
v/s Ratio Perm												
v/c Ratio	1.00	0.69		0.77	1.15		0.70	0.89		1.61	1.45	
Uniform Delay, d1	38.8	26.4		39.1	31.8		39.1	31.5		39.8	32.0	
Progression Factor	1.00	1.00		1.00	1.00		1.00	1.00		1.19	0.86	
Incremental Delay, d2	42.2	1.5		16.2	79.0		9.2	13.0		276.0	203.9	
Delay (s)	81.0	27.9		55.3	110.7		48.3	44.5		323.2	231.5	
Level of Service	F	C		E	F		D	D		F	F	
Approach Delay (s)		47.9			104.7			45.0			248.7	
Approach LOS		D			F			D			F	

Intersection Summary			
HCM Average Control Delay	128.1	HCM Level of Service	F
HCM Volume to Capacity ratio	1.30		
Actuated Cycle Length (s)	90.0	Sum of lost time (s)	16.0
Intersection Capacity Utilization	105.8%	ICU Level of Service	G
Analysis Period (min)	15		

c Critical Lane Group

Movement	EBL	EBT	EBR	WBL	WBT	WBR	NBL	NBT	NBR	SBL	SBT	SBR
Lane Configurations												
Ideal Flow (vphpl)	1900	1900	1900	1900	1900	1900	1900	1900	1900	1900	1900	1900
Total Lost time (s)		4.0						4.0		4.0	4.0	
Lane Util. Factor		1.00						0.95		0.97	0.95	
Frt		0.86						0.93		1.00	0.99	
Flt Protected		1.00						1.00		0.95	1.00	
Satd. Flow (prot)		1611						3283		3433	3495	
Flt Permitted		1.00						0.94		0.95	1.00	
Satd. Flow (perm)		1611						3074		3433	3495	
Volume (vph)	0	0	10	0	0	0	10	366	345	1600	664	60
Peak-hour factor, PHF	0.95	0.95	0.95	0.95	0.95	0.95	0.95	0.95	0.95	0.95	0.95	0.95
Adj. Flow (vph)	0	0	11	0	0	0	11	385	363	1684	699	63
RTOR Reduction (vph)	0	11	0	0	0	0	0	26	0	0	0	0
Lane Group Flow (vph)	0	0	0	0	0	0	0	733	0	1684	762	0
Turn Type										Prot		
Protected Phases								2		1	6	
Permitted Phases												
Actuated Green, G (s)		0.0						8.0		29.0	45.0	
Effective Green, g (s)		0.0						8.0		29.0	45.0	
Actuated g/C Ratio		0.00						0.18		0.64	1.00	
Clearance Time (s)								4.0		4.0	2.0	
Lane Grp Cap (vph)		0						546		2212	3495	
v/s Ratio Prot										c0.49	0.22	
v/s Ratio Perm								c0.24				
v/c Ratio		0.00						11.34dr		0.76	0.22	
Uniform Delay, d1		22.5						18.5		5.6	0.0	
Progression Factor		1.00						0.78		1.00	1.00	
Incremental Delay, d2		0.0						164.9		2.5	0.1	
Delay (s)		22.5						179.3		8.1	0.1	
Level of Service		C						F		A	A	
Approach Delay (s)		22.5			0.0			179.3			5.6	
Approach LOS		C			A			F			A	

Intersection Summary			
HCM Average Control Delay	46.7	HCM Level of Service	D
HCM Volume to Capacity ratio	0.89		
Actuated Cycle Length (s)	45.0	Sum of lost time (s)	8.0
Intersection Capacity Utilization	80.5%	ICU Level of Service	D
Analysis Period (min)	15		

dr Defacto Right Lane. Recode with 1 though lane as a right lane.

c Critical Lane Group

Movement	EBL	EBT	EBR	WBL	WBT	WBR	NBL	NBT	NBR	SBL	SBT	SBR
Lane Configurations												
Ideal Flow (vphpl)	1900	1900	1900	1900	1900	1900	1900	1900	1900	1900	1900	1900
Total Lost time (s)		4.0			4.0			4.0			4.0	
Lane Util. Factor		1.00			1.00			0.95			0.95	
Frpb, ped/bikes		0.98			0.95			0.98			0.99	
Flpb, ped/bikes		0.98			0.98			1.00			1.00	
Frt		0.98			0.94			0.98			0.99	
Flt Protected		0.98			0.99			1.00			1.00	
Satd. Flow (prot)		1710			1606			3390			3476	
Flt Permitted		0.83			0.88			0.87			0.88	
Satd. Flow (perm)		1455			1427			2949			3055	
Volume (vph)	80	100	31	60	70	110	41	511	90	60	794	40
Peak-hour factor, PHF	0.95	0.95	0.95	0.95	0.95	0.95	0.95	0.95	0.95	0.95	0.95	0.95
Adj. Flow (vph)	84	105	33	63	74	116	43	538	95	63	836	42
RTOR Reduction (vph)	0	14	0	0	68	0	0	29	0	0	8	0
Lane Group Flow (vph)	0	208	0	0	185	0	0	647	0	0	933	0
Confl. Peds. (#/hr)	100		100	100		100	100		100	100		100
Turn Type	Perm			Perm			Perm			Perm		
Protected Phases		4			8			2			6	
Permitted Phases	4			8			2			6		
Actuated Green, G (s)		15.0			15.0			22.0			22.0	
Effective Green, g (s)		15.0			15.0			22.0			22.0	
Actuated g/C Ratio		0.33			0.33			0.49			0.49	
Clearance Time (s)		4.0			4.0			4.0			4.0	
Lane Grp Cap (vph)		485			476			1442			1494	
v/s Ratio Prot												
v/s Ratio Perm		c0.14			0.13			0.22			c0.31	
v/c Ratio		0.43			0.39			0.45			0.62	
Uniform Delay, d1		11.7			11.5			7.5			8.5	
Progression Factor		1.00			1.00			1.00			1.00	
Incremental Delay, d2		2.8			2.4			1.0			2.0	
Delay (s)		14.4			13.9			8.5			10.4	
Level of Service		B			B			A			B	
Approach Delay (s)		14.4			13.9			8.5			10.4	
Approach LOS		B			B			A			B	

Intersection Summary			
HCM Average Control Delay	10.7	HCM Level of Service	B
HCM Volume to Capacity ratio	0.55		
Actuated Cycle Length (s)	45.0	Sum of lost time (s)	8.0
Intersection Capacity Utilization	73.6%	ICU Level of Service	D
Analysis Period (min)	15		
c Critical Lane Group			

Movement	EBL	EBT	EBR	WBL	WBT	WBR	NBL	NBT	NBR	SBL	SBT	SBR
Lane Configurations												
Ideal Flow (vphpl)	1900	1900	1900	1900	1900	1900	1900	1900	1900	1900	1900	1900
Total Lost time (s)		4.0			4.0			4.0			4.0	
Lane Util. Factor		1.00			1.00			0.95			0.91	
Frpb, ped/bikes		0.96			0.95			0.98			0.98	
Flpb, ped/bikes		0.98			0.98			1.00			1.00	
Frt		0.96			0.96			0.99			0.99	
Flt Protected		0.98			0.99			1.00			1.00	
Satd. Flow (prot)		1639			1645			3432			4958	
Flt Permitted		0.76			0.81			0.76			0.80	
Satd. Flow (perm)		1260			1345			2613			3975	
Volume (vph)	80	100	80	53	90	70	40	1063	72	80	1925	100
Peak-hour factor, PHF	0.95	0.95	0.95	0.95	0.95	0.95	0.95	0.95	0.95	0.95	0.95	0.95
Adj. Flow (vph)	84	105	84	56	95	74	42	1119	76	84	2026	105
RTOR Reduction (vph)	0	2	0	0	25	0	0	4	0	0	4	0
Lane Group Flow (vph)	0	271	0	0	200	0	0	1233	0	0	2211	0
Confl. Peds. (#/hr)	100		100	100		100	100		100	100		100
Turn Type	Perm			Perm			Perm			Perm		
Protected Phases		4			4			2			6	
Permitted Phases	4			4			2			6		
Actuated Green, G (s)		19.4			19.4			56.6			56.6	
Effective Green, g (s)		19.9			19.9			57.1			57.1	
Actuated g/C Ratio		0.23			0.23			0.67			0.67	
Clearance Time (s)		4.5			4.5			4.5			4.5	
Vehicle Extension (s)		2.0			2.0			2.0			2.0	
Lane Grp Cap (vph)		295			315			1755			2670	
v/s Ratio Prot												
v/s Ratio Perm		c0.22			0.15			0.47			c0.56	
v/c Ratio		0.92			0.64			0.70			0.83	
Uniform Delay, d1		31.8			29.3			8.7			10.3	
Progression Factor		1.00			1.00			1.00			1.00	
Incremental Delay, d2		31.9			3.1			2.4			3.1	
Delay (s)		63.7			32.4			11.1			13.4	
Level of Service		E			C			B			B	
Approach Delay (s)		63.7			32.4			11.1			13.4	
Approach LOS		E			C			B			B	

Intersection Summary			
HCM Average Control Delay	17.2	HCM Level of Service	B
HCM Volume to Capacity ratio	0.85		
Actuated Cycle Length (s)	85.0	Sum of lost time (s)	8.0
Intersection Capacity Utilization	112.3%	ICU Level of Service	H
Analysis Period (min)	15		
c Critical Lane Group			

Movement	EBL	EBT	EBR	WBL	WBT	WBR	NBL	NBT	NBR	SBL	SBT	SBR
Lane Configurations												
Ideal Flow (vphpl)	1900	1900	1900	1900	1900	1900	1900	1900	1900	1900	1900	1900
Total Lost time (s)	4.0	4.0		4.0	4.0		4.0	4.0		4.0	4.0	
Lane Util. Factor	1.00	0.95		1.00	0.95		1.00	1.00		1.00	1.00	
Frpb, ped/bikes	1.00	0.99		1.00	0.99		1.00	1.00		1.00	1.00	
Flpb, ped/bikes	1.00	1.00		1.00	1.00		1.00	1.00		0.99	1.00	
Frt	1.00	0.96		1.00	0.98		1.00	0.99		1.00	0.98	
Flt Protected	0.95	1.00		0.95	1.00		0.95	1.00		0.95	1.00	
Satd. Flow (prot)	1770	3372		1763	3454		1768	1835		1745	1815	
Flt Permitted	0.17	1.00		0.18	1.00		0.24	1.00		0.45	1.00	
Satd. Flow (perm)	324	3372		341	3454		449	1835		823	1815	
Volume (vph)	180	509	190	93	937	114	160	381	33	203	600	110
Peak-hour factor, PHF	0.95	0.95	0.95	0.95	0.95	0.95	0.95	0.95	0.95	0.95	0.95	0.95
Adj. Flow (vph)	189	536	200	98	986	120	168	401	35	214	632	116
RTOR Reduction (vph)	0	48	0	0	11	0	0	4	0	0	3	0
Lane Group Flow (vph)	189	688	0	98	1095	0	168	432	0	214	745	0
Confl. Peds. (#/hr)	30		12	12		30	6		54	54		6
Turn Type	Perm			Perm			Perm			Perm		
Protected Phases		4			8			2			6	
Permitted Phases	4			8			2			6		
Actuated Green, G (s)	24.0	24.0		24.0	24.0		49.5	49.5		49.5	49.5	
Effective Green, g (s)	23.0	23.0		23.0	23.0		49.0	49.0		49.0	49.0	
Actuated g/C Ratio	0.29	0.29		0.29	0.29		0.61	0.61		0.61	0.61	
Clearance Time (s)	3.0	3.0		3.0	3.0		3.5	3.5		3.5	3.5	
Lane Grp Cap (vph)	93	969		98	993		275	1124		504	1112	
v/s Ratio Prot		0.20			0.32			0.24			c0.41	
v/s Ratio Perm	c0.58			0.29			0.37			0.26		
v/c Ratio	2.03	0.71		1.00	1.10		0.61	0.38		0.42	0.67	
Uniform Delay, d1	28.5	25.5		28.5	28.5		9.6	7.9		8.1	10.2	
Progression Factor	1.00	1.00		0.87	0.89		1.00	1.00		1.00	1.00	
Incremental Delay, d2	499.9	4.4		80.4	58.1		9.7	1.0		2.6	3.2	
Delay (s)	528.4	29.9		105.2	83.5		19.3	8.9		10.7	13.4	
Level of Service	F	C		F	F		B	A		B	B	
Approach Delay (s)		131.8			85.3			11.8			12.8	
Approach LOS		F			F			B			B	

Intersection Summary			
HCM Average Control Delay	66.0	HCM Level of Service	E
HCM Volume to Capacity ratio	1.10		
Actuated Cycle Length (s)	80.0	Sum of lost time (s)	8.0
Intersection Capacity Utilization	104.4%	ICU Level of Service	G
Analysis Period (min)	15		
c Critical Lane Group			

Movement	EBL	EBT	EBR	WBL	WBT	WBR	NBL	NBT	NBR	SBL	SBT	SBR
Lane Configurations												
Ideal Flow (vphpl)	1900	1900	1900	1900	1900	1900	1900	1900	1900	1900	1900	1900
Total Lost time (s)	4.0	4.0		4.0	4.0			4.0			4.0	
Lane Util. Factor	1.00	0.95		1.00	0.95			0.95			0.95	
Frpb, ped/bikes	1.00	0.99		1.00	1.00			1.00			1.00	
Flpb, ped/bikes	1.00	1.00		0.99	1.00			1.00			1.00	
Frt	1.00	0.97		1.00	0.99			0.98			0.98	
Flt Protected	0.95	1.00		0.95	1.00			0.99			0.99	
Satd. Flow (prot)	1766	3409		1749	3496			3399			3427	
Flt Permitted	0.16	1.00		0.30	1.00			0.65			0.71	
Satd. Flow (perm)	297	3409		561	3496			2238			2447	
Volume (vph)	80	565	130	74	964	72	120	281	74	123	380	70
Peak-hour factor, PHF	0.95	0.95	0.95	0.95	0.95	0.95	0.95	0.95	0.95	0.95	0.95	0.95
Adj. Flow (vph)	84	595	137	78	1015	76	126	296	78	129	400	74
RTOR Reduction (vph)	0	25	0	0	7	0	0	19	0	0	14	0
Lane Group Flow (vph)	84	707	0	78	1084	0	0	481	0	0	589	0
Confl. Peds. (#/hr)	18		54	54		18	4		18	18		4
Turn Type	Perm			Perm			Perm			Perm		
Protected Phases		4			8			2			6	
Permitted Phases	4			8			2			6		
Actuated Green, G (s)	38.0	38.0		38.0	38.0			32.0			32.0	
Effective Green, g (s)	39.0	39.0		39.0	39.0			33.0			33.0	
Actuated g/C Ratio	0.49	0.49		0.49	0.49			0.41			0.41	
Clearance Time (s)	5.0	5.0		5.0	5.0			5.0			5.0	
Lane Grp Cap (vph)	145	1662		273	1704			923			1009	
v/s Ratio Prot		0.21			c0.31							
v/s Ratio Perm	0.28			0.14				0.22			c0.24	
v/c Ratio	0.58	0.43		0.29	0.64			0.52			0.58	
Uniform Delay, d1	14.6	13.3		12.2	15.2			17.6			18.2	
Progression Factor	0.97	0.91		1.39	1.44			0.53			1.00	
Incremental Delay, d2	12.8	0.6		2.1	1.5			1.4			2.5	
Delay (s)	27.1	12.7		19.1	23.4			10.8			20.7	
Level of Service	C	B		B	C			B			C	
Approach Delay (s)		14.1			23.2			10.8			20.7	
Approach LOS		B			C			B			C	

Intersection Summary			
HCM Average Control Delay	18.3	HCM Level of Service	B
HCM Volume to Capacity ratio	0.61		
Actuated Cycle Length (s)	80.0	Sum of lost time (s)	8.0
Intersection Capacity Utilization	78.0%	ICU Level of Service	D
Analysis Period (min)	15		
c Critical Lane Group			

Movement	EBL	EBT	EBR	WBL	WBT	WBR	NBL	NBT	NBR	SBL	SBT	SBR
Lane Configurations												
Ideal Flow (vphpl)	1900	1900	1900	1900	1900	1900	1900	1900	1900	1900	1900	1900
Total Lost time (s)	4.0	4.0		4.0	4.0			4.0			4.0	
Lane Util. Factor	1.00	0.95		1.00	0.95			0.95			0.95	
Frpb, ped/bikes	1.00	1.00		1.00	1.00			0.99			1.00	
Flpb, ped/bikes	1.00	1.00		0.99	1.00			1.00			1.00	
Frt	1.00	0.99		1.00	0.98			0.97			0.98	
Flt Protected	0.95	1.00		0.95	1.00			0.99			0.99	
Satd. Flow (prot)	1766	3478		1745	3454			3385			3424	
Flt Permitted	0.15	1.00		0.30	1.00			0.80			0.74	
Satd. Flow (perm)	288	3478		556	3454			2709			2554	
Volume (vph)	50	662	61	125	951	144	49	248	77	149	476	80
Peak-hour factor, PHF	0.96	0.96	0.96	0.96	0.96	0.96	0.96	0.96	0.96	0.96	0.96	0.96
Adj. Flow (vph)	52	690	64	130	991	150	51	258	80	155	496	83
RTOR Reduction (vph)	0	9	0	0	15	0	0	29	0	0	12	0
Lane Group Flow (vph)	52	745	0	130	1126	0	0	360	0	0	722	0
Confl. Peds. (#/hr)	13		71	71		13	22		22	22		22
Turn Type	Perm			Perm			Perm			Perm		
Protected Phases		4			8			2			6	
Permitted Phases	4			8			2			6		
Actuated Green, G (s)	41.5	41.5		41.5	41.5			32.0			32.0	
Effective Green, g (s)	41.0	41.0		41.0	41.0			31.0			31.0	
Actuated g/C Ratio	0.51	0.51		0.51	0.51			0.39			0.39	
Clearance Time (s)	3.5	3.5		3.5	3.5			3.0			3.0	
Lane Grp Cap (vph)	148	1782		285	1770			1050			990	
v/s Ratio Prot		0.21			c0.33							
v/s Ratio Perm	0.18			0.23				0.13			c0.28	
v/c Ratio	0.35	0.42		0.46	0.64			0.34			0.73	
Uniform Delay, d1	11.6	12.1		12.4	14.1			17.3			20.9	
Progression Factor	1.20	1.20		1.56	1.51			0.61			1.00	
Incremental Delay, d2	5.8	0.7		4.7	1.6			0.9			4.7	
Delay (s)	19.7	15.2		24.1	22.9			11.4			25.6	
Level of Service	B	B		C	C			B			C	
Approach Delay (s)		15.5			23.0			11.4			25.6	
Approach LOS		B			C			B			C	

Intersection Summary			
HCM Average Control Delay	20.3	HCM Level of Service	C
HCM Volume to Capacity ratio	0.68		
Actuated Cycle Length (s)	80.0	Sum of lost time (s)	8.0
Intersection Capacity Utilization	103.6%	ICU Level of Service	G
Analysis Period (min)	15		
c Critical Lane Group			

Movement	EBT	EBR	WBL	WBT	NBL	NBR
Lane Configurations						
Ideal Flow (vphpl)	1900	1900	1900	1900	1900	1900
Total Lost time (s)	4.0		4.0	4.0	4.0	
Lane Util. Factor	0.95		1.00	0.95	1.00	
Frpb, ped/bikes	0.96		1.00	1.00	1.00	
Flpb, ped/bikes	1.00		1.00	1.00	1.00	
Frt	0.98		1.00	1.00	0.97	
Flt Protected	1.00		0.95	1.00	0.96	
Satd. Flow (prot)	3342		1770	3539	1734	
Flt Permitted	1.00		0.95	1.00	0.96	
Satd. Flow (perm)	3342		1770	3539	1734	
Volume (vph)	793	95	72	1099	121	41
Peak-hour factor, PHF	0.95	0.95	0.95	0.95	0.95	0.95
Adj. Flow (vph)	835	100	76	1157	127	43
RTOR Reduction (vph)	0	0	0	0	0	0
Lane Group Flow (vph)	935	0	76	1157	170	0
Confl. Peds. (#/hr)		146	266			
Turn Type			Prot			
Protected Phases	4		3	8	2	
Permitted Phases						
Actuated Green, G (s)	48.1		7.6	59.7	12.3	
Effective Green, g (s)	48.1		7.6	59.7	12.3	
Actuated g/C Ratio	0.60		0.09	0.75	0.15	
Clearance Time (s)	4.0		4.0	4.0	4.0	
Vehicle Extension (s)	3.0		3.0	3.0	3.0	
Lane Grp Cap (vph)	2009		168	2641	267	
v/s Ratio Prot	c0.28		0.04	c0.33	c0.10	
v/s Ratio Perm						
v/c Ratio	0.47		0.45	0.44	0.64	
Uniform Delay, d1	8.8		34.2	3.8	31.8	
Progression Factor	1.67		1.00	1.00	0.97	
Incremental Delay, d2	0.7		1.9	0.5	4.6	
Delay (s)	15.5		36.2	4.4	35.6	
Level of Service	B		D	A	D	
Approach Delay (s)	15.5			6.3	35.6	
Approach LOS	B			A	D	

Intersection Summary			
HCM Average Control Delay	12.1	HCM Level of Service	B
HCM Volume to Capacity ratio	0.50		
Actuated Cycle Length (s)	80.0	Sum of lost time (s)	12.0
Intersection Capacity Utilization	48.9%	ICU Level of Service	A
Analysis Period (min)	15		
c Critical Lane Group			

Movement	EBL	EBT	EBR	WBL	WBT	WBR	NBL	NBT	NBR	SBL	SBT	SBR
Lane Configurations												
Ideal Flow (vphpl)	1900	1900	1900	1900	1900	1900	1900	1900	1900	1900	1900	1900
Total Lost time (s)	4.0	4.0		4.0	4.0		4.0	4.0		4.0	4.0	
Lane Util. Factor	1.00	0.95		1.00	0.95		1.00	0.95		1.00	0.95	
Frpb, ped/bikes	1.00	0.93		1.00	0.98		1.00	0.99		1.00	0.98	
Flpb, ped/bikes	0.97	1.00		0.96	1.00		1.00	1.00		1.00	1.00	
Frt	1.00	0.94		1.00	0.98		1.00	0.98		1.00	0.97	
Flt Protected	0.95	1.00		0.95	1.00		0.95	1.00		0.95	1.00	
Satd. Flow (prot)	1719	3096		1690	3414		1770	3437		1770	3357	
Flt Permitted	0.15	1.00		0.20	1.00		0.95	1.00		0.95	1.00	
Satd. Flow (perm)	278	3096		365	3414		1770	3437		1770	3357	
Volume (vph)	146	421	267	120	716	90	135	509	59	100	1318	320
Peak-hour factor, PHF	0.95	0.95	0.95	0.95	0.95	0.95	0.95	0.95	0.95	0.95	0.95	0.95
Adj. Flow (vph)	154	443	281	126	754	95	142	536	62	105	1387	337
RTOR Reduction (vph)	0	119	0	0	11	0	0	9	0	0	23	0
Lane Group Flow (vph)	154	605	0	126	838	0	142	589	0	105	1701	0
Confl. Peds. (#/hr)	72		137	137		72			58	58		92
Turn Type	Perm			Perm			Prot			Prot		
Protected Phases		4			8		5	2		1	6	
Permitted Phases	4			8								
Actuated Green, G (s)	25.5	25.5		25.5	25.5		10.7	37.9		8.1	35.3	
Effective Green, g (s)	26.0	26.0		26.0	26.0		11.2	38.4		8.6	35.8	
Actuated g/C Ratio	0.31	0.31		0.31	0.31		0.13	0.45		0.10	0.42	
Clearance Time (s)	4.5	4.5		4.5	4.5		4.5	4.5		4.5	4.5	
Vehicle Extension (s)	2.0	2.0		2.0	2.0		2.0	2.0		2.0	2.0	
Lane Grp Cap (vph)	85	947		112	1044		233	1553		179	1414	
v/s Ratio Prot		0.20			0.25		c0.08	c0.17		0.06	c0.51	
v/s Ratio Perm	c0.55			0.35								
v/c Ratio	1.81	0.64		1.12	0.80		0.61	0.38		0.59	1.20	
Uniform Delay, d1	29.5	25.5		29.5	27.1		34.8	15.4		36.5	24.6	
Progression Factor	1.00	1.00		1.00	1.00		0.96	1.34		1.00	1.00	
Incremental Delay, d2	407.6	1.1		122.6	4.3		3.0	0.7		3.1	98.3	
Delay (s)	437.1	26.5		152.1	31.4		36.3	21.3		39.6	122.9	
Level of Service	F	C		F	C		D	C		D	F	
Approach Delay (s)		98.5			47.0			24.2			118.1	
Approach LOS		F			D			C			F	

Intersection Summary			
HCM Average Control Delay	82.8	HCM Level of Service	F
HCM Volume to Capacity ratio	1.40		
Actuated Cycle Length (s)	85.0	Sum of lost time (s)	16.0
Intersection Capacity Utilization	99.9%	ICU Level of Service	F
Analysis Period (min)	15		

c Critical Lane Group

Movement	WBL	WBR	NBT	NBR	SBL	SBT
Lane Configurations						
Sign Control	Stop		Free			Free
Grade	0%		0%			0%
Volume (veh/h)	20	31	689	20	20	1679
Peak Hour Factor	0.95	0.95	0.95	0.95	0.95	0.95
Hourly flow rate (vph)	21	33	725	21	21	1767
Pedestrians	34		33			34
Lane Width (ft)	12.0		12.0			12.0
Walking Speed (ft/s)	4.0		4.0			4.0
Percent Blockage	3		3			3
Right turn flare (veh)						
Median type	None					
Median storage veh)						
Upstream signal (ft)			230			471
pX, platoon unblocked	0.62	0.92			0.92	
vC, conflicting volume	1729	441			780	
vC1, stage 1 conf vol						
vC2, stage 2 conf vol						
vCu, unblocked vol	1156	300			670	
tC, single (s)	6.8	6.9			4.1	
tC, 2 stage (s)						
tF (s)	3.5	3.3			2.2	
p0 queue free %	80	95			97	
cM capacity (veh/h)	108	603			816	

Direction, Lane #	WB 1	NB 1	NB 2	SB 1	SB 2	SB 3
Volume Total	54	484	263	21	884	884
Volume Left	21	0	0	21	0	0
Volume Right	33	0	21	0	0	0
cSH	215	1700	1700	816	1700	1700
Volume to Capacity	0.25	0.28	0.15	0.03	0.52	0.52
Queue Length 95th (ft)	24	0	0	2	0	0
Control Delay (s)	27.2	0.0	0.0	9.5	0.0	0.0
Lane LOS	D			A		
Approach Delay (s)	27.2	0.0		0.1		
Approach LOS	D					

Intersection Summary			
Average Delay	0.6		
Intersection Capacity Utilization	63.7%	ICU Level of Service	B
Analysis Period (min)	15		

Movement	EBL	EBT	EBR	WBL	WBT	WBR	NBL	NBT	NBR	SBL	SBT	SBR
Lane Configurations												
Ideal Flow (vphpl)	1900	1900	1900	1900	1900	1900	1900	1900	1900	1900	1900	1900
Total Lost time (s)		4.0		4.0	4.0			4.0		4.0	4.0	
Lane Util. Factor		0.91		1.00	0.95			1.00		1.00	1.00	
Frpb, ped/bikes		1.00		1.00	1.00			0.99		1.00	0.99	
Flpb, ped/bikes		1.00		1.00	1.00			1.00		0.98	1.00	
Frt		0.99		1.00	0.98			0.97		1.00	0.96	
Flt Protected		0.99		0.95	1.00			0.99		0.95	1.00	
Satd. Flow (prot)		4981		1763	3448			1752		1733	1763	
Flt Permitted		0.65		0.24	1.00			0.10		0.39	1.00	
Satd. Flow (perm)		3273		454	3448			180		718	1763	
Volume (vph)	210	709	50	71	1094	191	100	183	90	200	493	200
Peak-hour factor, PHF	0.95	0.95	0.95	0.95	0.95	0.95	0.95	0.95	0.95	0.95	0.95	0.95
Adj. Flow (vph)	221	746	53	75	1152	201	105	193	95	211	519	211
RTOR Reduction (vph)	0	7	0	0	17	0	0	13	0	0	17	0
Lane Group Flow (vph)	0	1013	0	75	1336	0	0	380	0	211	713	0
Confl. Peds. (#/hr)	24		18	18		24	24		48	48		24
Turn Type	Perm			Perm			Perm			Perm		
Protected Phases		4			8			2			6	
Permitted Phases	4			8			2			6		
Actuated Green, G (s)		51.0		51.0	51.0			24.0		24.0	24.0	
Effective Green, g (s)		52.0		52.0	52.0			25.0		25.0	25.0	
Actuated g/C Ratio		0.61		0.61	0.61			0.29		0.29	0.29	
Clearance Time (s)		5.0		5.0	5.0			5.0		5.0	5.0	
Lane Grp Cap (vph)		2002		278	2109			53		211	519	
v/s Ratio Prot					c0.39						0.40	
v/s Ratio Perm		0.31		0.17				c2.11		0.29		
v/c Ratio		1.40dl		0.27	0.63			7.16		1.00	1.37	
Uniform Delay, d1		9.3		7.7	10.5			30.0		30.0	30.0	
Progression Factor		1.00		1.00	1.00			1.00		1.00	1.00	
Incremental Delay, d2		0.9		2.4	1.5			2811.8		62.0	180.2	
Delay (s)		10.2		10.0	11.9			2841.8		92.0	210.2	
Level of Service		B		B	B			F		F	F	
Approach Delay (s)		10.2			11.8			2841.8			183.7	
Approach LOS		B			B			F			F	

Intersection Summary			
HCM Average Control Delay	348.2	HCM Level of Service	F
HCM Volume to Capacity ratio	2.76		
Actuated Cycle Length (s)	85.0	Sum of lost time (s)	8.0
Intersection Capacity Utilization	158.7%	ICU Level of Service	H
Analysis Period (min)	15		

dl Defacto Left Lane. Recode with 1 though lane as a left lane.
c Critical Lane Group

Movement	EBL	EBT	EBR	WBL	WBT	WBR	NBL	NBT	NBR	SBL	SBT	SBR
Lane Configurations												
Ideal Flow (vphpl)	1900	1900	1900	1900	1900	1900	1900	1900	1900	1900	1900	1900
Total Lost time (s)		4.0			4.0		4.0	4.0		4.0	4.0	
Lane Util. Factor		0.91			0.91		1.00	1.00		1.00	1.00	
Frpb, ped/bikes		1.00			1.00		1.00	1.00		1.00	0.99	
Flpb, ped/bikes		1.00			1.00		1.00	1.00		1.00	1.00	
Frt		1.00			0.99		1.00	0.97		1.00	0.97	
Flt Protected		1.00			1.00		0.95	1.00		0.95	1.00	
Satd. Flow (prot)		5033			5008		1762	1803		1770	1802	
Flt Permitted		0.74			0.81		0.20	1.00		0.20	1.00	
Satd. Flow (perm)		3725			4061		362	1803		363	1802	
Volume (vph)	80	909	30	71	1187	111	70	304	83	150	364	80
Peak-hour factor, PHF	0.95	0.95	0.95	0.95	0.95	0.95	0.95	0.95	0.95	0.95	0.95	0.95
Adj. Flow (vph)	84	957	32	75	1249	117	74	320	87	158	383	84
RTOR Reduction (vph)	0	4	0	0	13	0	0	12	0	0	10	0
Lane Group Flow (vph)	0	1069	0	0	1428	0	74	395	0	158	457	0
Confl. Peds. (#/hr)			18	18			12					18
Turn Type	Perm			Perm			Perm			Perm		
Protected Phases		4			8			2			6	
Permitted Phases	4			8			2			6		
Actuated Green, G (s)		50.0			50.0		19.0	19.0		19.0	19.0	
Effective Green, g (s)		51.5			51.5		20.5	20.5		20.5	20.5	
Actuated g/C Ratio		0.64			0.64		0.26	0.26		0.26	0.26	
Clearance Time (s)		5.5			5.5		5.5	5.5		5.5	5.5	
Lane Grp Cap (vph)		2398			2614		93	462		93	462	
v/s Ratio Prot								0.22			0.25	
v/s Ratio Perm		0.29			c0.35		0.20			c0.43		
v/c Ratio		0.45			0.55		0.80	0.86		1.70	0.99	
Uniform Delay, d1		7.1			7.8		27.8	28.3		29.8	29.6	
Progression Factor		1.00			0.27		1.00	1.00		1.17	1.17	
Incremental Delay, d2		0.6			0.7		49.1	18.0		351.3	36.7	
Delay (s)		7.7			2.8		76.9	46.4		386.0	71.4	
Level of Service		A			A		E	D		F	E	
Approach Delay (s)		7.7			2.8			51.1			150.9	
Approach LOS		A			A			D			F	

Intersection Summary			
HCM Average Control Delay	36.2	HCM Level of Service	D
HCM Volume to Capacity ratio	0.87		
Actuated Cycle Length (s)	80.0	Sum of lost time (s)	8.0
Intersection Capacity Utilization	89.4%	ICU Level of Service	E
Analysis Period (min)	15		

c Critical Lane Group

Movement	EBL	EBT	EBR	WBL	WBT	WBR	NBL	NBT	NBR	SBL	SBT	SBR
Lane Configurations												
Ideal Flow (vphpl)	1900	1900	1900	1900	1900	1900	1900	1900	1900	1900	1900	1900
Total Lost time (s)		4.0			4.0			4.0			4.0	
Lane Util. Factor		0.91			0.91			0.95			0.95	
Frpb, ped/bikes		1.00			1.00			0.99			1.00	
Flpb, ped/bikes		1.00			1.00			1.00			1.00	
Frt		0.99			0.99			0.97			0.98	
Flt Protected		1.00			1.00			0.99			0.99	
Satd. Flow (prot)		5022			4988			3403			3432	
Flt Permitted		0.77			0.80			0.69			0.81	
Satd. Flow (perm)		3858			4020			2377			2793	
Volume (vph)	64	1029	60	68	1264	146	40	174	44	107	461	74
Peak-hour factor, PHF	0.95	0.95	0.95	0.95	0.95	0.95	0.95	0.95	0.95	0.95	0.95	0.95
Adj. Flow (vph)	67	1083	63	72	1331	154	42	183	46	113	485	78
RTOR Reduction (vph)	0	7	0	0	17	0	0	22	0	0	13	0
Lane Group Flow (vph)	0	1206	0	0	1540	0	0	249	0	0	663	0
Confl. Peds. (#/hr)	17		19	19		17	12		16	16		12
Turn Type	Perm			Perm			Perm			Perm		
Protected Phases		4			8			2			6	
Permitted Phases	4			8			2			6		
Actuated Green, G (s)		50.0			50.0			19.0			19.0	
Effective Green, g (s)		51.5			51.5			20.5			20.5	
Actuated g/C Ratio		0.64			0.64			0.26			0.26	
Clearance Time (s)		5.5			5.5			5.5			5.5	
Lane Grp Cap (vph)		2484			2588			609			716	
v/s Ratio Prot												
v/s Ratio Perm		0.31			c0.38			0.10			c0.24	
v/c Ratio		0.49			0.60			0.41			0.93	
Uniform Delay, d1		7.4			8.2			24.7			29.0	
Progression Factor		0.66			1.14			1.00			0.48	
Incremental Delay, d2		0.5			0.9			2.0			19.0	
Delay (s)		5.4			10.3			26.8			33.0	
Level of Service		A			B			C			C	
Approach Delay (s)		5.4			10.3			26.8			33.0	
Approach LOS		A			B			C			C	

Intersection Summary			
HCM Average Control Delay	14.0	HCM Level of Service	B
HCM Volume to Capacity ratio	0.69		
Actuated Cycle Length (s)	80.0	Sum of lost time (s)	8.0
Intersection Capacity Utilization	121.4%	ICU Level of Service	H
Analysis Period (min)	15		
c Critical Lane Group			

Movement	EBL	EBT	EBR	WBL	WBT	WBR	NBL	NBT	NBR	SBL	SBT	SBR
Lane Configurations												
Ideal Flow (vphpl)	1900	1900	1900	1900	1900	1900	1900	1900	1900	1900	1900	1900
Total Lost time (s)		4.0			4.0			4.0			4.0	
Lane Util. Factor		0.91			0.91			1.00			1.00	
Frpb, ped/bikes		1.00			0.98			1.00			0.95	
Flpb, ped/bikes		1.00			1.00			1.00			1.00	
Frt		1.00			0.99			0.93			0.92	
Flt Protected		1.00			1.00			0.98			0.98	
Satd. Flow (prot)		5073			4947			1695			1594	
Flt Permitted		0.86			0.93			0.87			0.87	
Satd. Flow (perm)		4368			4590			1510			1409	
Volume (vph)	31	1258	10	10	1405	100	10	0	10	54	0	73
Peak-hour factor, PHF	0.95	0.95	0.95	0.95	0.95	0.95	0.95	0.95	0.95	0.95	0.95	0.95
Adj. Flow (vph)	33	1324	11	11	1479	105	11	0	11	57	0	77
RTOR Reduction (vph)	0	1	0	0	0	0	0	9	0	0	0	0
Lane Group Flow (vph)	0	1367	0	0	1595	0	0	13	0	0	134	0
Confl. Peds. (#/hr)						98						98
Turn Type	Perm			Perm			Perm			Perm		
Protected Phases		4			8			2			6	
Permitted Phases	4			8			2			6		
Actuated Green, G (s)		57.7			57.7			14.3			14.3	
Effective Green, g (s)		57.7			57.7			14.3			14.3	
Actuated g/C Ratio		0.72			0.72			0.18			0.18	
Clearance Time (s)		4.0			4.0			4.0			4.0	
Vehicle Extension (s)		3.0			3.0			3.0			3.0	
Lane Grp Cap (vph)		3150			3311			270			252	
v/s Ratio Prot												
v/s Ratio Perm		0.31			c0.35			0.01			c0.10	
v/c Ratio		0.43			0.48			0.05			0.53	
Uniform Delay, d1		4.5			4.8			27.2			29.8	
Progression Factor		1.38			1.00			1.00			1.04	
Incremental Delay, d2		0.4			0.5			0.1			2.0	
Delay (s)		6.6			5.3			27.3			32.9	
Level of Service		A			A			C			C	
Approach Delay (s)		6.6			5.3			27.3			32.9	
Approach LOS		A			A			C			C	

Intersection Summary			
HCM Average Control Delay	7.2	HCM Level of Service	A
HCM Volume to Capacity ratio	0.49		
Actuated Cycle Length (s)	80.0	Sum of lost time (s)	8.0
Intersection Capacity Utilization	77.2%	ICU Level of Service	D
Analysis Period (min)	15		
c Critical Lane Group			

Movement	EBL	EBT	EBR	WBL	WBT	WBR	NBL	NBT	NBR	SBL	SBT	SBR
Lane Configurations												
Ideal Flow (vphpl)	1900	1900	1900	1900	1900	1900	1900	1900	1900	1900	1900	1900
Total Lost time (s)		4.0			4.0		4.0	4.0		4.0	4.0	
Lane Util. Factor		0.91			0.91		1.00	0.95		1.00	0.95	
Frpb, ped/bikes		1.00			0.99		1.00	0.99		1.00	0.99	
Flpb, ped/bikes		1.00			1.00		1.00	1.00		0.99	1.00	
Frt		0.98			0.98		1.00	0.97		1.00	0.97	
Flt Protected		0.99			0.99		0.95	1.00		0.95	1.00	
Satd. Flow (prot)		4933			4925		1770	3408		1744	3425	
Flt Permitted		0.64			0.64		0.13	1.00		0.39	1.00	
Satd. Flow (perm)		3169			3174		244	3408		723	3425	
Volume (vph)	147	988	187	200	1146	190	120	375	90	364	1139	239
Peak-hour factor, PHF	0.95	0.95	0.95	0.95	0.95	0.95	0.95	0.95	0.95	0.95	0.95	0.95
Adj. Flow (vph)	155	1040	197	211	1206	200	126	395	95	383	1199	252
RTOR Reduction (vph)	0	23	0	0	24	0	0	23	0	0	19	0
Lane Group Flow (vph)	0	1369	0	0	1593	0	126	467	0	383	1432	0
Confl. Peds. (#/hr)	40		9			40	25		31	31		25
Turn Type	Perm			pm+pt			Perm			Perm		
Protected Phases		4		3	8			2			6	
Permitted Phases	4			8			2			6		
Actuated Green, G (s)		45.0			45.0		29.5	29.5		29.5	29.5	
Effective Green, g (s)		46.5			46.5		30.5	30.5		30.5	30.5	
Actuated g/C Ratio		0.55			0.55		0.36	0.36		0.36	0.36	
Clearance Time (s)		5.5			5.5		5.0	5.0		5.0	5.0	
Vehicle Extension (s)		2.0			2.0		2.0	2.0		2.0	2.0	
Lane Grp Cap (vph)		1734			1736		88	1223		259	1229	
v/s Ratio Prot								0.14			0.42	
v/s Ratio Perm		0.43			c0.50		0.52			c0.53		
v/c Ratio		0.98dl			1.55dl		1.43	0.38		1.48	1.16	
Uniform Delay, d1		15.3			17.5		27.2	20.2		27.2	27.2	
Progression Factor		1.00			1.00		1.27	1.29		0.62	0.61	
Incremental Delay, d2		2.3			8.0		245.4	0.9		228.1	80.2	
Delay (s)		17.6			25.5		279.9	26.9		245.0	96.9	
Level of Service		B			C		F	C		F	F	
Approach Delay (s)		17.6			25.5			78.7			127.8	
Approach LOS		B			C			E			F	

Intersection Summary			
HCM Average Control Delay	63.9	HCM Level of Service	E
HCM Volume to Capacity ratio	1.14		
Actuated Cycle Length (s)	85.0	Sum of lost time (s)	8.0
Intersection Capacity Utilization	116.7%	ICU Level of Service	H
Analysis Period (min)	15		

dl Defacto Left Lane. Recode with 1 though lane as a left lane.
c Critical Lane Group

Movement	EBL	EBT	EBR	WBL	WBT	WBR	NBL	NBT	NBR	SBL	SBT	SBR
Lane Configurations												
Ideal Flow (vphpl)	1900	1900	1900	1900	1900	1900	1900	1900	1900	1900	1900	1900
Total Lost time (s)		4.0			4.0			4.0	4.0		4.0	
Lane Util. Factor		0.91			0.91			1.00	1.00		1.00	
Frpb, ped/bikes		1.00			0.99			1.00	0.88		0.97	
Flpb, ped/bikes		1.00			1.00			0.97	1.00		0.95	
Frt		1.00			0.99			1.00	0.85		0.96	
Flt Protected		1.00			1.00			0.98	1.00		0.98	
Satd. Flow (prot)		5058			5005			1770	1395		1603	
Flt Permitted		0.83			0.82			0.84	1.00		0.81	
Satd. Flow (perm)		4208			4107			1512	1395		1334	
Volume (vph)	40	1409	23	50	1474	90	32	43	30	100	40	60
Peak-hour factor, PHF	0.95	0.95	0.95	0.95	0.95	0.95	0.95	0.95	0.95	0.95	0.95	0.95
Adj. Flow (vph)	42	1483	24	53	1552	95	34	45	32	105	42	63
RTOR Reduction (vph)	0	2	0	0	8	0	0	0	18	0	15	0
Lane Group Flow (vph)	0	1547	0	0	1692	0	0	79	14	0	195	0
Confl. Peds. (#/hr)	100		100	100		100	100		100	100		100
Turn Type	Perm			Perm			Perm		Perm	Perm		
Protected Phases		4			8			2			6	
Permitted Phases	4			8			2		2	6		
Actuated Green, G (s)		48.0			48.0			23.0	23.0		23.0	
Effective Green, g (s)		48.5			48.5			23.5	23.5		23.5	
Actuated g/C Ratio		0.61			0.61			0.29	0.29		0.29	
Clearance Time (s)		4.5			4.5			4.5	4.5		4.5	
Lane Grp Cap (vph)		2551			2490			444	410		392	
v/s Ratio Prot												
v/s Ratio Perm		0.37			c0.41			0.05	0.01		c0.15	
v/c Ratio		0.61			0.68			0.18	0.03		0.50	
Uniform Delay, d1		9.8			10.5			21.1	20.2		23.4	
Progression Factor		1.00			1.00			1.00	1.00		1.00	
Incremental Delay, d2		1.1			1.5			0.9	0.2		4.5	
Delay (s)		10.9			12.1			21.9	20.3		27.8	
Level of Service		B			B			C	C		C	
Approach Delay (s)		10.9			12.1			21.5			27.8	
Approach LOS		B			B			C			C	

Intersection Summary			
HCM Average Control Delay	12.8	HCM Level of Service	B
HCM Volume to Capacity ratio	0.62		
Actuated Cycle Length (s)	80.0	Sum of lost time (s)	8.0
Intersection Capacity Utilization	94.0%	ICU Level of Service	F
Analysis Period (min)	15		

c Critical Lane Group

Movement	EBL	EBT	EBR	WBL	WBT	WBR	NBL	NBT	NBR	SBL	SBT	SBR
Lane Configurations												
Ideal Flow (vphpl)	1900	1900	1900	1900	1900	1900	1900	1900	1900	1900	1900	1900
Total Lost time (s)	4.0	4.0		4.0	4.0		4.0	4.0	4.0	4.0	4.0	4.0
Lane Util. Factor	1.00	0.91		1.00	0.91		1.00	0.95	1.00	1.00	0.95	1.00
Frpb, ped/bikes	1.00	0.99		1.00	0.99		1.00	1.00	0.96	1.00	1.00	0.96
Flpb, ped/bikes	1.00	1.00		1.00	1.00		1.00	1.00	1.00	1.00	1.00	1.00
Frt	1.00	0.98		1.00	0.96		1.00	1.00	0.85	1.00	1.00	0.85
Flt Protected	0.95	1.00		0.95	1.00		0.95	1.00	1.00	0.95	1.00	1.00
Satd. Flow (prot)	1770	4923		1770	4839		1770	3539	1515	1770	3539	1523
Flt Permitted	0.95	1.00		0.95	1.00		0.95	1.00	1.00	0.95	1.00	1.00
Satd. Flow (perm)	1770	4923		1770	4839		1770	3539	1515	1770	3539	1523
Volume (vph)	170	1207	171	210	1144	380	140	421	130	390	1441	250
Peak-hour factor, PHF	0.95	0.95	0.95	0.95	0.95	0.95	0.95	0.95	0.95	0.95	0.95	0.95
Adj. Flow (vph)	179	1271	180	221	1204	400	147	443	137	411	1517	263
RTOR Reduction (vph)	0	15	0	0	50	0	0	0	33	0	0	13
Lane Group Flow (vph)	179	1436	0	221	1554	0	147	443	104	411	1517	250
Confl. Peds. (#/hr)			66			23			38			26
Turn Type	Prot			Prot			Prot		pm+ov	Prot		pm+ov
Protected Phases	7	4		3	8		5	2	3	1	6	7
Permitted Phases									2			6
Actuated Green, G (s)	12.0	32.0		15.0	35.0		11.0	28.0	43.0	29.0	46.0	58.0
Effective Green, g (s)	11.0	33.0		14.0	36.0		10.0	29.0	43.0	28.0	47.0	58.0
Actuated g/C Ratio	0.09	0.28		0.12	0.30		0.08	0.24	0.36	0.23	0.39	0.48
Clearance Time (s)	3.0	5.0		3.0	5.0		3.0	5.0	3.0	3.0	5.0	3.0
Vehicle Extension (s)	2.0	2.0		2.0	2.0		2.0	2.0	2.0	2.0	2.0	2.0
Lane Grp Cap (vph)	162	1354		207	1452		148	855	593	413	1386	736
v/s Ratio Prot	0.10	0.29		c0.12	c0.32		c0.08	0.13	0.02	0.23	c0.43	0.03
v/s Ratio Perm									0.05			0.13
v/c Ratio	1.10	1.06		1.07	1.07		0.99	0.52	0.18	1.00	1.09	0.34
Uniform Delay, d1	54.5	43.5		53.0	42.0		55.0	39.4	26.4	45.9	36.5	19.2
Progression Factor	1.00	1.00		1.00	1.00		1.00	1.00	1.00	1.00	1.00	1.00
Incremental Delay, d2	101.6	42.2		81.6	45.0		71.6	2.2	0.1	42.7	54.3	0.1
Delay (s)	156.1	85.7		134.6	87.0		126.5	41.7	26.4	88.6	90.8	19.3
Level of Service	F	F		F	F		F	D	C	F	F	B
Approach Delay (s)		93.4			92.7			56.0			81.8	
Approach LOS		F			F			E			F	

Intersection Summary			
HCM Average Control Delay	85.0	HCM Level of Service	F
HCM Volume to Capacity ratio	1.09		
Actuated Cycle Length (s)	120.0	Sum of lost time (s)	16.0
Intersection Capacity Utilization	101.5%	ICU Level of Service	G
Analysis Period (min)	15		

c Critical Lane Group

Movement	EBL	EBT	EBR	WBL	WBT	WBR	NBL	NBT	NBR	SBL	SBT	SBR
Lane Configurations												
Ideal Flow (vphpl)	1900	1900	1900	1900	1900	1900	1900	1900	1900	1900	1900	1900
Total Lost time (s)		4.0			4.0		4.0	4.0		4.0	4.0	
Lane Util. Factor		1.00			1.00		1.00	0.95		1.00	0.95	
Frpb, ped/bikes		0.94			0.97		1.00	0.98		1.00	0.99	
Flpb, ped/bikes		0.98			0.96		0.98	1.00		0.94	1.00	
Frt		0.96			0.96		1.00	0.99		1.00	0.99	
Flt Protected		0.98			0.98		0.95	1.00		0.95	1.00	
Satd. Flow (prot)		1608			1632		1733	3430		1657	3472	
Flt Permitted		0.71			0.79		0.17	1.00		0.38	1.00	
Satd. Flow (perm)		1159			1311		305	3430		663	3472	
Volume (vph)	62	50	50	70	80	64	80	589	60	52	1202	72
Peak-hour factor, PHF	0.95	0.95	0.95	0.95	0.95	0.95	0.95	0.95	0.95	0.95	0.95	0.95
Adj. Flow (vph)	65	53	53	74	84	67	84	620	63	55	1265	76
RTOR Reduction (vph)	0	22	0	0	20	0	0	7	0	0	4	0
Lane Group Flow (vph)	0	149	0	0	205	0	84	676	0	55	1337	0
Confl. Peds. (#/hr)	100		100	100		100	100		100	100		100
Turn Type	Perm			Perm			Perm			Perm		
Protected Phases		4			4			2			6	
Permitted Phases	4			4			2			6		
Actuated Green, G (s)		15.9			15.9		62.1	62.1		62.1	62.1	
Effective Green, g (s)		15.4			15.4		61.6	61.6		61.6	61.6	
Actuated g/C Ratio		0.18			0.18		0.72	0.72		0.72	0.72	
Clearance Time (s)		3.5			3.5		3.5	3.5		3.5	3.5	
Vehicle Extension (s)		2.0			2.0		2.0	2.0		2.0	2.0	
Lane Grp Cap (vph)		210			238		221	2486		480	2516	
v/s Ratio Prot								0.20			c0.39	
v/s Ratio Perm		0.13			c0.16		0.28			0.08		
v/c Ratio		0.71			0.86		0.38	0.27		0.11	0.53	
Uniform Delay, d1		32.7			33.7		4.4	4.0		3.5	5.2	
Progression Factor		1.00			1.00		1.00	1.00		0.95	0.90	
Incremental Delay, d2		8.6			24.4		4.9	0.3		0.0	0.1	
Delay (s)		41.3			58.1		9.4	4.3		3.4	4.8	
Level of Service		D			E		A	A		A	A	
Approach Delay (s)		41.3			58.1			4.8			4.7	
Approach LOS		D			E			A			A	

Intersection Summary			
HCM Average Control Delay	11.9	HCM Level of Service	B
HCM Volume to Capacity ratio	0.60		
Actuated Cycle Length (s)	85.0	Sum of lost time (s)	8.0
Intersection Capacity Utilization	70.2%	ICU Level of Service	C
Analysis Period (min)	15		

c Critical Lane Group

Movement	EBL	EBT	EBR	WBL	WBT	WBR	NBL	NBT	NBR	SBL	SBT	SBR
Lane Configurations												
Ideal Flow (vphpl)	1900	1900	1900	1900	1900	1900	1900	1900	1900	1900	1900	1900
Total Lost time (s)	4.0	4.0		4.0	4.0		4.0	4.0		4.0	4.0	
Lane Util. Factor	1.00	0.95		1.00	0.95		1.00	0.95		1.00	0.95	
Frpb, ped/bikes	1.00	0.98		1.00	0.95		1.00	0.99		1.00	0.97	
Flpb, ped/bikes	1.00	1.00		1.00	1.00		1.00	1.00		0.95	1.00	
Frt	1.00	0.98		1.00	0.97		1.00	0.98		1.00	0.97	
Flt Protected	0.95	1.00		0.95	1.00		0.95	1.00		0.95	1.00	
Satd. Flow (prot)	1770	3379		1770	3267		1770	3412		1685	3338	
Flt Permitted	0.95	1.00		0.95	1.00		0.12	1.00		0.44	1.00	
Satd. Flow (perm)	1770	3379		1770	3267		219	3412		786	3338	
Volume (vph)	270	500	100	140	710	199	70	361	60	172	1020	220
Peak-hour factor, PHF	0.95	0.95	0.95	0.95	0.95	0.95	0.95	0.95	0.95	0.95	0.95	0.95
Adj. Flow (vph)	284	526	105	147	747	209	74	380	63	181	1074	232
RTOR Reduction (vph)	0	18	0	0	30	0	0	15	0	0	20	0
Lane Group Flow (vph)	284	613	0	147	926	0	74	428	0	181	1286	0
Confl. Peds. (#/hr)			100			100	100		100	100		100
Turn Type	Prot			Prot			Perm			Perm		
Protected Phases	7	4		3	8			2			6	
Permitted Phases							2			6		
Actuated Green, G (s)	16.5	28.0		11.0	22.5		32.5	32.5		32.5	32.5	
Effective Green, g (s)	17.0	27.5		11.5	22.0		34.0	34.0		34.0	34.0	
Actuated g/C Ratio	0.20	0.32		0.14	0.26		0.40	0.40		0.40	0.40	
Clearance Time (s)	4.5	3.5		4.5	3.5		5.5	5.5		5.5	5.5	
Vehicle Extension (s)	2.0	2.0		2.0	2.0		2.0	2.0		2.0	2.0	
Lane Grp Cap (vph)	354	1093		239	846		88	1365		314	1335	
v/s Ratio Prot	c0.16	0.18		0.08	c0.28			0.13			c0.39	
v/s Ratio Perm							0.34			0.23		
v/c Ratio	0.80	0.56		0.62	1.09		0.84	0.31		0.58	0.96	
Uniform Delay, d1	32.4	23.8		34.7	31.5		23.1	17.5		19.9	24.9	
Progression Factor	1.00	1.00		1.00	1.00		1.00	1.00		1.00	1.00	
Incremental Delay, d2	11.7	0.4		3.3	59.8		59.2	0.6		7.5	17.2	
Delay (s)	44.1	24.2		37.9	91.3		82.2	18.1		27.4	42.1	
Level of Service	D	C		D	F		F	B		C	D	
Approach Delay (s)		30.3			84.2			27.3			40.3	
Approach LOS		C			F			C			D	

Intersection Summary			
HCM Average Control Delay	48.4	HCM Level of Service	D
HCM Volume to Capacity ratio	0.97		
Actuated Cycle Length (s)	85.0	Sum of lost time (s)	12.0
Intersection Capacity Utilization	96.0%	ICU Level of Service	F
Analysis Period (min)	15		

c Critical Lane Group

Movement	EBL	EBR	NBL	NBT	SBT	SBR
Lane Configurations						
Ideal Flow (vphpl)	1900	1900	1900	1900	1900	1900
Total Lost time (s)	4.0		4.0	4.0	4.0	
Lane Util. Factor	1.00		1.00	0.95	0.95	
Frt	0.91		1.00	1.00	0.99	
Flt Protected	0.98		0.95	1.00	1.00	
Satd. Flow (prot)	1670		1770	3539	3514	
Flt Permitted	0.98		0.95	1.00	1.00	
Satd. Flow (perm)	1670		1770	3539	3514	
Volume (vph)	67	126	58	665	1627	78
Peak-hour factor, PHF	0.95	0.95	0.95	0.99	0.99	0.95
Adj. Flow (vph)	71	133	61	672	1643	82
RTOR Reduction (vph)	96	0	0	0	3	0
Lane Group Flow (vph)	108	0	61	672	1722	0
Turn Type			Prot			
Protected Phases	2		3	8	4	
Permitted Phases						
Actuated Green, G (s)	15.7		7.4	61.3	49.9	
Effective Green, g (s)	15.7		7.4	61.3	49.9	
Actuated g/C Ratio	0.18		0.09	0.72	0.59	
Clearance Time (s)	4.0		4.0	4.0	4.0	
Vehicle Extension (s)	3.0		3.0	3.0	3.0	
Lane Grp Cap (vph)	308		154	2552	2063	
v/s Ratio Prot	c0.06		c0.03	0.19	c0.49	
v/s Ratio Perm						
v/c Ratio	0.35		0.40	0.26	0.83	
Uniform Delay, d1	30.2		36.7	4.1	14.2	
Progression Factor	1.00		0.99	1.79	1.10	
Incremental Delay, d2	0.7		1.4	0.2	0.4	
Delay (s)	30.9		37.8	7.5	16.0	
Level of Service	C		D	A	B	
Approach Delay (s)	30.9			10.0	16.0	
Approach LOS	C			B	B	

Intersection Summary			
HCM Average Control Delay	15.5	HCM Level of Service	B
HCM Volume to Capacity ratio	0.69		
Actuated Cycle Length (s)	85.0	Sum of lost time (s)	12.0
Intersection Capacity Utilization	66.3%	ICU Level of Service	C
Analysis Period (min)	15		

c Critical Lane Group

Movement	EBL	EBT	EBR	WBL	WBT	WBR	NBL	NBT	NBR	SBL	SBT	SBR
Lane Configurations												
Ideal Flow (vphpl)	1900	1900	1900	1900	1900	1900	1900	1900	1900	1900	1900	1900
Lane Width	12	12	12	12	12	12	16	16	16	16	16	16
Total Lost time (s)	4.0	4.0		4.0	4.0		2.0	2.0		2.0	2.0	
Lane Util. Factor	1.00	0.91		1.00	0.91		1.00	1.00		1.00	1.00	
Frpb, ped/bikes	1.00	0.99		1.00	1.00		1.00	0.98		1.00	0.98	
Flpb, ped/bikes	1.00	1.00		1.00	1.00		1.00	1.00		0.98	1.00	
Frt	1.00	0.98		1.00	0.98		1.00	0.96		1.00	0.93	
Flt Protected	0.95	1.00		0.95	1.00		0.95	1.00		0.95	1.00	
Satd. Flow (prot)	1770	4925		1770	4960		2006	1990		1960	1918	
Flt Permitted	0.95	1.00		0.95	1.00		0.12	1.00		0.54	1.00	
Satd. Flow (perm)	1770	4925		1770	4960		257	1990		1110	1918	
Volume (vph)	350	1302	191	120	1070	170	200	257	100	160	289	280
Peak-hour factor, PHF	0.95	0.95	0.95	0.95	0.95	0.95	0.95	0.95	0.95	0.95	0.95	0.95
Adj. Flow (vph)	368	1371	201	126	1126	179	211	271	105	168	304	295
RTOR Reduction (vph)	0	19	0	0	21	0	0	14	0	0	35	0
Lane Group Flow (vph)	368	1553	0	126	1284	0	211	362	0	168	564	0
Confl. Peds. (#/hr)			32	32		4	12		24	24		12
Parking (#/hr)												0
Turn Type	Prot			Prot			pm+pt			Perm		
Protected Phases	7	4		3	8		5	2			6	
Permitted Phases							2			6		
Actuated Green, G (s)	20.0	36.6		9.6	26.2		43.3	43.3		30.3	30.3	
Effective Green, g (s)	20.0	36.6		9.6	26.2		43.8	43.8		30.8	30.8	
Actuated g/C Ratio	0.20	0.37		0.10	0.26		0.44	0.44		0.31	0.31	
Clearance Time (s)	4.0	4.0		4.0	4.0		4.0	2.5		2.5	2.5	
Vehicle Extension (s)	3.0	3.0		3.0	3.0		3.0	3.0		3.0	3.0	
Lane Grp Cap (vph)	354	1803		170	1300		305	872		342	591	
v/s Ratio Prot	c0.21	0.32		0.07	c0.26		c0.08	0.18			c0.29	
v/s Ratio Perm							0.23			0.15		
v/c Ratio	1.04	0.86		0.74	0.99		0.69	0.42		0.49	0.95	
Uniform Delay, d1	40.0	29.4		44.0	36.7		44.3	19.3		28.2	33.9	
Progression Factor	1.00	1.00		1.00	1.00		1.00	1.00		1.00	1.00	
Incremental Delay, d2	58.5	5.7		15.9	22.1		6.6	0.3		1.1	25.8	
Delay (s)	98.5	35.0		59.9	58.9		50.9	19.6		29.3	59.7	
Level of Service	F	D		E	E		D	B		C	E	
Approach Delay (s)		47.1			59.0			30.9			53.1	
Approach LOS		D			E			C			D	

Intersection Summary			
HCM Average Control Delay	49.6	HCM Level of Service	D
HCM Volume to Capacity ratio	0.94		
Actuated Cycle Length (s)	100.0	Sum of lost time (s)	12.0
Intersection Capacity Utilization	101.3%	ICU Level of Service	G
Analysis Period (min)	15		

c Critical Lane Group

Movement	EBL	EBT	EBR	WBL	WBT	WBR	NBL	NBT	NBR	SBL	SBT	SBR
Lane Configurations												
Ideal Flow (vphpl)	1900	1900	1900	1900	1900	1900	1900	1900	1900	1900	1900	1900
Total Lost time (s)		4.0		4.0	4.0			4.0		4.0	4.0	
Lane Util. Factor		1.00		0.95	0.95			0.95		1.00	0.95	
Frpb, ped/bikes		1.00		1.00	0.97			0.98		1.00	0.95	
Flpb, ped/bikes		0.99		1.00	1.00			1.00		1.00	1.00	
Frt		0.93		1.00	0.93			0.95		1.00	0.95	
Flt Protected		0.99		0.95	1.00			1.00		0.95	1.00	
Satd. Flow (prot)		1705		1681	1586			3275		1770	3208	
Flt Permitted		0.36		0.73	1.00			0.94		0.95	1.00	
Satd. Flow (perm)		619		1290	1586			3087		1770	3208	
Volume (vph)	10	10	20	126	120	120	10	1113	615	200	898	420
Peak-hour factor, PHF	0.95	0.95	0.95	0.95	0.95	0.95	0.95	0.95	0.95	0.95	0.95	0.95
Adj. Flow (vph)	11	11	21	133	126	126	11	1172	647	211	945	442
RTOR Reduction (vph)	0	20	0	0	39	0	0	64	0	0	46	0
Lane Group Flow (vph)	0	23	0	133	213	0	0	1766	0	211	1341	0
Confl. Peds. (#/hr)	36					36	48		16	16		48
Turn Type	Perm			Perm			Perm			Prot		
Protected Phases		7			8			2		1	6	
Permitted Phases	7			8			2					
Actuated Green, G (s)		6.5		16.7	16.7			45.7		13.1	63.3	
Effective Green, g (s)		7.0		17.2	17.2			46.2		13.6	63.8	
Actuated g/C Ratio		0.07		0.17	0.17			0.46		0.14	0.64	
Clearance Time (s)		4.5		4.5	4.5			4.5		4.5	4.5	
Vehicle Extension (s)		2.0		2.0	2.0			2.0		2.0	2.0	
Lane Grp Cap (vph)		43		222	273			1426		241	2047	
v/s Ratio Prot										c0.12	0.42	
v/s Ratio Perm		c0.04		0.10	0.13			c0.57				
v/c Ratio		0.55		0.60	0.78			1.24		0.88	0.66	
Uniform Delay, d1		45.0		38.2	39.6			26.9		42.4	11.3	
Progression Factor		1.00		1.00	1.00			0.62		1.00	1.00	
Incremental Delay, d2		7.4		2.9	12.5			107.9		27.1	1.7	
Delay (s)		52.3		41.1	52.1			124.5		69.5	12.9	
Level of Service		D		D	D			F		E	B	
Approach Delay (s)		52.3			48.3			124.5			20.4	
Approach LOS		D			D			F			C	

Intersection Summary			
HCM Average Control Delay	72.9	HCM Level of Service	E
HCM Volume to Capacity ratio	1.03		
Actuated Cycle Length (s)	100.0	Sum of lost time (s)	16.0
Intersection Capacity Utilization	118.1%	ICU Level of Service	H
Analysis Period (min)	15		

c Critical Lane Group

Movement	EBL	EBT	EBR	WBL	WBT	WBR	NBL	NBT	NBR	SBL	SBT	SBR
Lane Configurations												
Ideal Flow (vphpl)	1900	1900	1900	1900	1900	1900	1900	1900	1900	1900	1900	1900
Total Lost time (s)	4.0	4.0		4.0	4.0		4.0	4.0		4.0	4.0	
Lane Util. Factor	0.97	0.95		1.00	0.95		1.00	0.95		1.00	0.95	
Frpb, ped/bikes	1.00	0.98		1.00	0.99		1.00	0.97		1.00	0.98	
Flpb, ped/bikes	1.00	1.00		1.00	1.00		1.00	1.00		1.00	1.00	
Frt	1.00	0.98		1.00	0.94		1.00	0.96		1.00	0.99	
Flt Protected	0.95	1.00		0.95	1.00		0.95	1.00		0.95	1.00	
Satd. Flow (prot)	3433	3418		1770	3299		1770	3280		1770	3416	
Flt Permitted	0.95	1.00		0.95	1.00		0.95	1.00		0.95	1.00	
Satd. Flow (perm)	3433	3418		1770	3299		1770	3280		1770	3416	
Volume (vph)	460	930	132	160	580	350	100	948	350	300	694	60
Peak-hour factor, PHF	0.95	0.95	0.95	0.95	0.95	0.95	0.95	0.95	0.95	0.95	0.95	0.95
Adj. Flow (vph)	484	979	139	168	611	368	105	998	368	316	731	63
RTOR Reduction (vph)	0	11	0	0	90	0	0	38	0	0	7	0
Lane Group Flow (vph)	484	1107	0	168	889	0	105	1328	0	316	787	0
Confl. Peds. (#/hr)	15		48	48		15	123		48	48		123
Turn Type	Prot			Prot			Prot			Prot		
Protected Phases	7	4		3	8		5	2		1	6	
Permitted Phases												
Actuated Green, G (s)	15.7	27.5		10.9	22.7		5.0	32.6		12.0	39.6	
Effective Green, g (s)	15.2	28.5		10.4	23.7		4.5	33.6		11.5	40.6	
Actuated g/C Ratio	0.15	0.28		0.10	0.24		0.04	0.34		0.12	0.41	
Clearance Time (s)	3.5	5.0		3.5	5.0		3.5	5.0		3.5	5.0	
Vehicle Extension (s)	2.0	2.0		2.0	2.0		2.0	2.0		2.0	2.0	
Lane Grp Cap (vph)	522	974		184	782		80	1102		204	1387	
v/s Ratio Prot	c0.14	c0.32		0.09	0.27		0.06	c0.40		c0.18	0.23	
v/s Ratio Perm												
v/c Ratio	0.93	1.14		0.91	1.14		1.31	1.21		1.55	0.57	
Uniform Delay, d1	41.9	35.8		44.4	38.1		47.8	33.2		44.2	22.9	
Progression Factor	1.00	1.00		1.00	1.00		1.00	1.00		1.20	0.76	
Incremental Delay, d2	22.3	74.0		41.7	76.9		205.3	101.1		264.8	1.3	
Delay (s)	64.2	109.8		86.0	115.0		253.1	134.3		317.7	18.8	
Level of Service	E	F		F	F		F	F		F	B	
Approach Delay (s)		96.0			110.8			142.8			103.9	
Approach LOS		F			F			F			F	

Intersection Summary			
HCM Average Control Delay	113.7	HCM Level of Service	F
HCM Volume to Capacity ratio	1.16		
Actuated Cycle Length (s)	100.0	Sum of lost time (s)	12.0
Intersection Capacity Utilization	109.3%	ICU Level of Service	H
Analysis Period (min)	15		

c Critical Lane Group

Movement	EBL	EBT	EBR	WBL	WBT	WBR	NBL	NBT	NBR	SBL	SBT	SBR
Lane Configurations												
Ideal Flow (vphpl)	1900	1900	1900	1900	1900	1900	1900	1900	1900	1900	1900	1900
Total Lost time (s)		4.0						4.0		4.0	4.0	
Lane Util. Factor		1.00						0.95		0.97	0.95	
Frt		0.86						0.94		1.00	0.98	
Flt Protected		1.00						1.00		0.95	1.00	
Satd. Flow (prot)		1611						3335		3433	3463	
Flt Permitted		1.00						0.95		0.95	1.00	
Satd. Flow (perm)		1611						3165		3433	3463	
Volume (vph)	0	0	10	0	0	0	10	555	347	1550	356	60
Peak-hour factor, PHF	0.95	0.95	0.95	0.95	0.95	0.95	0.95	0.95	0.95	0.95	0.95	0.95
Adj. Flow (vph)	0	0	11	0	0	0	11	584	365	1632	375	63
RTOR Reduction (vph)	0	11	0	0	0	0	0	18	0	0	0	0
Lane Group Flow (vph)	0	0	0	0	0	0	0	942	0	1632	438	0
Turn Type							Perm			Prot		
Protected Phases								2		1	6	
Permitted Phases							2					
Actuated Green, G (s)		0.0						13.0		29.0	50.0	
Effective Green, g (s)		0.0						13.0		29.0	50.0	
Actuated g/C Ratio		0.00						0.26		0.58	1.00	
Clearance Time (s)								4.0		4.0	2.0	
Lane Grp Cap (vph)		0						823		1991	3463	
v/s Ratio Prot										c0.48	0.13	
v/s Ratio Perm								c0.30				
v/c Ratio		0.00						1.14		0.82	0.13	
Uniform Delay, d1		25.0						18.5		8.4	0.0	
Progression Factor		1.00						0.71		1.00	1.00	
Incremental Delay, d2		0.0						77.8		3.9	0.1	
Delay (s)		25.0						90.9		12.3	0.1	
Level of Service		C						F		B	A	
Approach Delay (s)		25.0			0.0			90.9			9.7	
Approach LOS		C			A			F			A	

Intersection Summary			
HCM Average Control Delay	35.4	HCM Level of Service	D
HCM Volume to Capacity ratio	0.92		
Actuated Cycle Length (s)	50.0	Sum of lost time (s)	8.0
Intersection Capacity Utilization	84.3%	ICU Level of Service	E
Analysis Period (min)	15		

c Critical Lane Group

Movement	EBL	EBT	EBR	WBL	WBT	WBR	NBL	NBT	NBR	SBL	SBT	SBR
Lane Configurations												
Ideal Flow (vphpl)	1900	1900	1900	1900	1900	1900	1900	1900	1900	1900	1900	1900
Total Lost time (s)		4.0			4.0			4.0			4.0	
Lane Util. Factor		1.00			1.00			0.95			0.95	
Frpb, ped/bikes		0.96			0.97			0.99			0.99	
Flpb, ped/bikes		0.99			0.97			1.00			1.00	
Frt		0.97			0.96			0.98			0.99	
Flt Protected		0.99			0.99			1.00			0.99	
Satd. Flow (prot)		1694			1668			3422			3427	
Flt Permitted		0.87			0.90			0.92			0.78	
Satd. Flow (perm)		1501			1515			3161			2695	
Volume (vph)	40	70	31	70	140	90	41	721	90	60	306	30
Peak-hour factor, PHF	0.95	0.95	0.95	0.95	0.95	0.95	0.95	0.95	0.95	0.95	0.95	0.95
Adj. Flow (vph)	42	74	33	74	147	95	43	759	95	63	322	32
RTOR Reduction (vph)	0	20	0	0	31	0	0	18	0	0	13	0
Lane Group Flow (vph)	0	129	0	0	285	0	0	879	0	0	405	0
Confl. Peds. (#/hr)	100		100	100		100	100		100	100		100
Turn Type	Perm			Perm			Perm			Perm		
Protected Phases		4			8			2			6	
Permitted Phases	4			8			2			6		
Actuated Green, G (s)		17.0			17.0			25.0			25.0	
Effective Green, g (s)		17.0			17.0			25.0			25.0	
Actuated g/C Ratio		0.34			0.34			0.50			0.50	
Clearance Time (s)		4.0			4.0			4.0			4.0	
Lane Grp Cap (vph)		510			515			1581			1348	
v/s Ratio Prot												
v/s Ratio Perm		0.09			c0.19			c0.28			0.15	
v/c Ratio		0.25			0.55			0.56			0.30	
Uniform Delay, d1		11.9			13.4			8.7			7.4	
Progression Factor		1.00			1.00			1.00			1.00	
Incremental Delay, d2		1.2			4.2			1.4			0.6	
Delay (s)		13.1			17.7			10.1			7.9	
Level of Service		B			B			B			A	
Approach Delay (s)		13.1			17.7			10.1			7.9	
Approach LOS		B			B			B			A	

Intersection Summary			
HCM Average Control Delay	11.2	HCM Level of Service	B
HCM Volume to Capacity ratio	0.55		
Actuated Cycle Length (s)	50.0	Sum of lost time (s)	8.0
Intersection Capacity Utilization	78.1%	ICU Level of Service	D
Analysis Period (min)	15		
c Critical Lane Group			

Movement	EBL	EBT	EBR	WBL	WBT	WBR	NBL	NBT	NBR	SBL	SBT	SBR
Lane Configurations												
Ideal Flow (vphpl)	1900	1900	1900	1900	1900	1900	1900	1900	1900	1900	1900	1900
Total Lost time (s)		4.0			4.0			4.0			4.0	
Lane Util. Factor		1.00			1.00			0.95			0.91	
Frpb, ped/bikes		0.96			0.96			0.99			0.98	
Flpb, ped/bikes		0.97			0.99			1.00			1.00	
Frt		0.96			0.96			0.99			0.99	
Flt Protected		0.98			0.99			1.00			1.00	
Satd. Flow (prot)		1623			1667			3453			4910	
Flt Permitted		0.74			0.88			0.76			0.80	
Satd. Flow (perm)		1224			1481			2644			3911	
Volume (vph)	80	70	70	32	80	50	90	1664	82	40	1096	90
Peak-hour factor, PHF	0.95	0.95	0.95	0.95	0.95	0.95	0.95	0.95	0.95	0.95	0.95	0.95
Adj. Flow (vph)	84	74	74	34	84	53	95	1752	86	42	1154	95
RTOR Reduction (vph)	0	18	0	0	3	0	0	2	0	0	7	0
Lane Group Flow (vph)	0	214	0	0	168	0	0	1931	0	0	1284	0
Confl. Peds. (#/hr)	100		100	100		100	100		100	100		100
Turn Type	Perm			Perm			Perm			Perm		
Protected Phases		4			4			2			6	
Permitted Phases	4			4			2			6		
Actuated Green, G (s)		15.3			15.3			55.7			55.7	
Effective Green, g (s)		15.8			15.8			56.2			56.2	
Actuated g/C Ratio		0.20			0.20			0.70			0.70	
Clearance Time (s)		4.5			4.5			4.5			4.5	
Vehicle Extension (s)		2.0			2.0			2.0			2.0	
Lane Grp Cap (vph)		242			292			1857			2747	
v/s Ratio Prot												
v/s Ratio Perm		c0.17			0.11			c0.73			0.33	
v/c Ratio		0.88			0.57			1.04			0.47	
Uniform Delay, d1		31.2			29.1			11.9			5.3	
Progression Factor		1.00			1.00			1.00			1.00	
Incremental Delay, d2		28.5			1.7			32.0			0.6	
Delay (s)		59.7			30.8			43.9			5.8	
Level of Service		E			C			D			A	
Approach Delay (s)		59.7			30.8			43.9			5.8	
Approach LOS		E			C			D			A	

Intersection Summary			
HCM Average Control Delay	30.7	HCM Level of Service	C
HCM Volume to Capacity ratio	1.01		
Actuated Cycle Length (s)	80.0	Sum of lost time (s)	8.0
Intersection Capacity Utilization	113.7%	ICU Level of Service	H
Analysis Period (min)	15		
c Critical Lane Group			

Movement	EBL	EBT	EBR	WBL	WBT	WBR	NBL	NBT	NBR	SBL	SBT	SBR
Lane Configurations												
Ideal Flow (vphpl)	1900	1900	1900	1900	1900	1900	1900	1900	1900	1900	1900	1900
Total Lost time (s)	4.0	4.0		4.0	4.0		4.0	4.0		4.0	4.0	
Lane Util. Factor	1.00	0.95		1.00	0.95		1.00	1.00		1.00	1.00	
Frpb, ped/bikes	1.00	1.00		1.00	1.00		1.00	1.00		1.00	1.00	
Flpb, ped/bikes	1.00	1.00		1.00	1.00		0.98	1.00		1.00	1.00	
Frt	1.00	0.98		1.00	0.98		1.00	0.98		1.00	0.98	
Flt Protected	0.95	1.00		0.95	1.00		0.95	1.00		0.95	1.00	
Satd. Flow (prot)	1765	3464		1768	3454		1741	1830		1766	1825	
Flt Permitted	0.12	1.00		0.12	1.00		0.52	1.00		0.22	1.00	
Satd. Flow (perm)	232	3464		233	3454		960	1830		402	1825	
Volume (vph)	90	1116	160	83	892	133	180	561	65	105	250	30
Peak-hour factor, PHF	0.95	0.95	0.95	0.95	0.95	0.95	0.95	0.95	0.95	0.95	0.95	0.95
Adj. Flow (vph)	95	1175	168	87	939	140	189	591	68	111	263	32
RTOR Reduction (vph)	0	14	0	0	15	0	0	5	0	0	6	0
Lane Group Flow (vph)	95	1329	0	87	1064	0	189	654	0	111	290	0
Confl. Peds. (#/hr)	12		12	12		12	42		12	12		42
Turn Type	Perm			Perm			Perm			Perm		
Protected Phases		4			8			2			6	
Permitted Phases	4			8			2			6		
Actuated Green, G (s)	33.0	33.0		33.0	33.0		40.5	40.5		40.5	40.5	
Effective Green, g (s)	32.0	32.0		32.0	32.0		40.0	40.0		40.0	40.0	
Actuated g/C Ratio	0.40	0.40		0.40	0.40		0.50	0.50		0.50	0.50	
Clearance Time (s)	3.0	3.0		3.0	3.0		3.5	3.5		3.5	3.5	
Lane Grp Cap (vph)	93	1386		93	1382		480	915		201	913	
v/s Ratio Prot		0.38			0.31			c0.36			0.16	
v/s Ratio Perm	c0.41			0.37			0.20			0.28		
v/c Ratio	1.02	0.96		0.94	0.77		0.39	0.71		0.55	0.32	
Uniform Delay, d1	24.0	23.4		23.0	20.8		12.5	15.6		13.8	11.9	
Progression Factor	1.00	1.00		1.72	1.79		1.64	1.63		1.00	1.00	
Incremental Delay, d2	99.3	16.2		45.2	1.8		0.2	0.4		10.5	0.9	
Delay (s)	123.3	39.5		84.7	39.1		20.6	25.9		24.3	12.8	
Level of Service	F	D		F	D		C	C		C	B	
Approach Delay (s)		45.1			42.5			24.7			15.9	
Approach LOS		D			D			C			B	

Intersection Summary			
HCM Average Control Delay	36.7	HCM Level of Service	D
HCM Volume to Capacity ratio	0.85		
Actuated Cycle Length (s)	80.0	Sum of lost time (s)	8.0
Intersection Capacity Utilization	96.5%	ICU Level of Service	F
Analysis Period (min)	15		
c Critical Lane Group			

Movement	EBL	EBT	EBR	WBL	WBT	WBR	NBL	NBT	NBR	SBL	SBT	SBR
Lane Configurations												
Ideal Flow (vphpl)	1900	1900	1900	1900	1900	1900	1900	1900	1900	1900	1900	1900
Total Lost time (s)	4.0	4.0		4.0	4.0			4.0			4.0	
Lane Util. Factor	1.00	0.95		1.00	0.95			0.95			0.95	
Frpb, ped/bikes	1.00	0.99		1.00	1.00			1.00			1.00	
Flpb, ped/bikes	1.00	1.00		1.00	1.00			1.00			1.00	
Frt	1.00	0.99		1.00	0.99			0.98			0.97	
Flt Protected	0.95	1.00		0.95	1.00			0.99			0.99	
Satd. Flow (prot)	1764	3458		1770	3500			3435			3394	
Flt Permitted	0.16	1.00		0.16	1.00			0.84			0.87	
Satd. Flow (perm)	297	3458		298	3500			2913			2962	
Volume (vph)	60	1156	120	69	1018	63	90	331	57	33	160	50
Peak-hour factor, PHF	0.99	0.99	0.99	0.99	0.99	0.99	0.99	0.99	0.99	0.99	0.99	0.99
Adj. Flow (vph)	61	1168	121	70	1028	64	91	334	58	33	162	51
RTOR Reduction (vph)	0	10	0	0	6	0	0	1	0	0	4	0
Lane Group Flow (vph)	61	1279	0	70	1087	0	0	482	0	0	242	0
Confl. Peds. (#/hr)	24		78	78		24	8		6	6		8
Turn Type	Perm			Perm			Perm			Perm		
Protected Phases		4			8			2			6	
Permitted Phases	4			8			2			6		
Actuated Green, G (s)	24.0	24.0		24.0	24.0			46.0			46.0	
Effective Green, g (s)	25.0	25.0		25.0	25.0			47.0			47.0	
Actuated g/C Ratio	0.31	0.31		0.31	0.31			0.59			0.59	
Clearance Time (s)	5.0	5.0		5.0	5.0			5.0			5.0	
Lane Grp Cap (vph)	93	1081		93	1094			1711			1740	
v/s Ratio Prot		c0.37			0.31							
v/s Ratio Perm	0.21			0.23				c0.17			0.08	
v/c Ratio	0.66	1.18		0.75	0.99			0.28			0.14	
Uniform Delay, d1	23.8	27.5		24.7	27.4			8.2			7.4	
Progression Factor	0.64	0.57		0.80	0.83			1.06			1.00	
Incremental Delay, d2	13.2	86.6		26.9	18.9			0.2			0.2	
Delay (s)	28.5	102.3		46.7	41.7			8.8			7.6	
Level of Service	C	F		D	D			A			A	
Approach Delay (s)		99.0			42.0			8.8			7.6	
Approach LOS		F			D			A			A	

Intersection Summary			
HCM Average Control Delay	58.2	HCM Level of Service	E
HCM Volume to Capacity ratio	0.59		
Actuated Cycle Length (s)	80.0	Sum of lost time (s)	8.0
Intersection Capacity Utilization	80.4%	ICU Level of Service	D
Analysis Period (min)	15		
c Critical Lane Group			

Movement	EBL	EBT	EBR	WBL	WBT	WBR	NBL	NBT	NBR	SBL	SBT	SBR
Lane Configurations												
Ideal Flow (vphpl)	1900	1900	1900	1900	1900	1900	1900	1900	1900	1900	1900	1900
Total Lost time (s)	4.0	4.0		4.0	4.0			4.0			4.0	
Lane Util. Factor	1.00	0.95		1.00	0.95			0.95			0.95	
Frpb, ped/bikes	1.00	1.00		1.00	1.00			1.00			1.00	
Flpb, ped/bikes	1.00	1.00		1.00	1.00			1.00			1.00	
Frt	1.00	0.99		1.00	0.98			0.98			0.98	
Flt Protected	0.95	1.00		0.95	1.00			0.99			0.99	
Satd. Flow (prot)	1768	3493		1764	3452			3418			3419	
Flt Permitted	0.11	1.00		0.11	1.00			0.86			0.67	
Satd. Flow (perm)	213	3493		212	3452			2948			2305	
Volume (vph)	90	1113	84	114	1055	169	75	543	123	91	256	60
Peak-hour factor, PHF	0.95	0.95	0.95	0.95	0.95	0.95	0.95	0.95	0.95	0.95	0.95	0.95
Adj. Flow (vph)	95	1172	88	120	1111	178	79	572	129	96	269	63
RTOR Reduction (vph)	0	7	0	0	16	0	0	12	0	0	18	0
Lane Group Flow (vph)	95	1253	0	120	1273	0	0	768	0	0	410	0
Confl. Peds. (#/hr)	8		39	39		8			25	25		
Turn Type	Perm			Perm			Perm			Perm		
Protected Phases		4			8			2			6	
Permitted Phases	4			8			2			6		
Actuated Green, G (s)	35.5	35.5		35.5	35.5			38.0			38.0	
Effective Green, g (s)	35.0	35.0		35.0	35.0			37.0			37.0	
Actuated g/C Ratio	0.44	0.44		0.44	0.44			0.46			0.46	
Clearance Time (s)	3.5	3.5		3.5	3.5			3.0			3.0	
Lane Grp Cap (vph)	93	1528		93	1510			1363			1066	
v/s Ratio Prot		0.36			0.37							
v/s Ratio Perm	0.45			c0.57				c0.26			0.18	
v/c Ratio	1.02	0.82		1.29	0.84			0.56			0.38	
Uniform Delay, d1	22.5	19.7		22.5	20.1			15.6			14.1	
Progression Factor	1.04	1.04		1.43	1.45			1.29			1.00	
Incremental Delay, d2	33.5	0.5		185.7	5.4			1.4			1.1	
Delay (s)	57.0	21.1		217.8	34.4			21.6			15.1	
Level of Service	E	C		F	C			C			B	
Approach Delay (s)		23.6			50.0			21.6			15.1	
Approach LOS		C			D			C			B	

Intersection Summary			
HCM Average Control Delay	31.7	HCM Level of Service	C
HCM Volume to Capacity ratio	0.92		
Actuated Cycle Length (s)	80.0	Sum of lost time (s)	8.0
Intersection Capacity Utilization	95.0%	ICU Level of Service	F
Analysis Period (min)	15		
c Critical Lane Group			

Movement	EBT	EBR	WBL	WBT	NBL	NBR
Lane Configurations						
Ideal Flow (vphpl)	1900	1900	1900	1900	1900	1900
Total Lost time (s)	4.0		4.0	4.0	4.0	4.0
Lane Util. Factor	0.95		1.00	0.95	1.00	1.00
Frpb, ped/bikes	0.96		1.00	1.00	1.00	1.00
Flpb, ped/bikes	1.00		1.00	1.00	1.00	1.00
Frt	0.99		1.00	1.00	1.00	0.85
Flt Protected	1.00		0.95	1.00	0.95	1.00
Satd. Flow (prot)	3344		1770	3539	1770	1583
Flt Permitted	1.00		0.95	1.00	0.95	1.00
Satd. Flow (perm)	3344		1770	3539	1770	1583
Volume (vph)	1226	112	56	1223	126	46
Peak-hour factor, PHF	0.97	0.97	0.97	0.97	0.97	0.97
Adj. Flow (vph)	1264	115	58	1261	130	47
RTOR Reduction (vph)	0	0	0	0	0	0
Lane Group Flow (vph)	1379	0	58	1261	130	47
Confl. Peds. (#/hr)		213	348			
Turn Type			Prot			Perm
Protected Phases	4		3	8	2	
Permitted Phases						2
Actuated Green, G (s)	51.7		7.5	63.2	8.8	8.8
Effective Green, g (s)	51.7		7.5	63.2	8.8	8.8
Actuated g/C Ratio	0.65		0.09	0.79	0.11	0.11
Clearance Time (s)	4.0		4.0	4.0	4.0	4.0
Vehicle Extension (s)	3.0		3.0	3.0	3.0	3.0
Lane Grp Cap (vph)	2161		166	2796	195	174
v/s Ratio Prot	c0.41		0.03	c0.36	c0.07	
v/s Ratio Perm						0.03
v/c Ratio	0.64		0.35	0.45	0.67	0.27
Uniform Delay, d1	8.5		34.0	2.7	34.2	32.7
Progression Factor	1.45		0.97	0.60	0.70	0.68
Incremental Delay, d2	0.9		0.3	0.1	7.2	0.7
Delay (s)	13.3		33.4	1.8	31.0	22.8
Level of Service	B		C	A	C	C
Approach Delay (s)	13.3			3.2	28.8	
Approach LOS	B			A	C	

Intersection Summary			
HCM Average Control Delay	9.6	HCM Level of Service	A
HCM Volume to Capacity ratio	0.63		
Actuated Cycle Length (s)	80.0	Sum of lost time (s)	12.0
Intersection Capacity Utilization	58.4%	ICU Level of Service	B
Analysis Period (min)	15		
c Critical Lane Group			

Movement	EBL	EBT	EBR	WBL	WBT	WBR	NBL	NBT	NBR	SBL	SBT	SBR
Lane Configurations												
Ideal Flow (vphpl)	1900	1900	1900	1900	1900	1900	1900	1900	1900	1900	1900	1900
Total Lost time (s)	4.0	4.0		4.0	4.0		4.0	4.0		4.0	4.0	
Lane Util. Factor	1.00	0.95		1.00	0.95		1.00	0.95		1.00	0.95	
Frpb, ped/bikes	1.00	0.99		1.00	0.97		1.00	0.99		1.00	0.96	
Flpb, ped/bikes	0.94	1.00		0.99	1.00		1.00	1.00		1.00	1.00	
Frt	1.00	0.98		1.00	0.98		1.00	0.99		1.00	0.96	
Flt Protected	0.95	1.00		0.95	1.00		0.95	1.00		0.95	1.00	
Satd. Flow (prot)	1671	3441		1748	3336		1770	3472		1770	3277	
Flt Permitted	0.25	1.00		0.15	1.00		0.95	1.00		0.95	1.00	
Satd. Flow (perm)	440	3441		283	3336		1770	3472		1770	3277	
Volume (vph)	249	914	109	74	558	110	466	1448	124	130	693	255
Peak-hour factor, PHF	0.98	0.98	0.98	0.98	0.98	0.98	0.98	0.98	0.98	0.98	0.98	0.98
Adj. Flow (vph)	254	933	111	76	569	112	476	1478	127	133	707	260
RTOR Reduction (vph)	0	11	0	0	20	0	0	7	0	0	26	0
Lane Group Flow (vph)	254	1033	0	76	661	0	476	1598	0	133	941	0
Confl. Peds. (#/hr)	94		86	86		94			40			111
Turn Type	Perm			Perm			Prot			Prot		
Protected Phases		4			8		5	2		1	6	
Permitted Phases	4			8								
Actuated Green, G (s)	25.5	25.5		25.5	25.5		13.5	32.2		8.8	27.5	
Effective Green, g (s)	26.0	26.0		26.0	26.0		14.0	32.7		9.3	28.0	
Actuated g/C Ratio	0.32	0.32		0.32	0.32		0.18	0.41		0.12	0.35	
Clearance Time (s)	4.5	4.5		4.5	4.5		4.5	4.5		4.5	4.5	
Vehicle Extension (s)	2.0	2.0		2.0	2.0		2.0	2.0		2.0	2.0	
Lane Grp Cap (vph)	143	1118		92	1084		310	1419		206	1147	
v/s Ratio Prot		0.30			0.20		c0.27	c0.46		0.08	0.29	
v/s Ratio Perm	c0.58			0.27								
v/c Ratio	1.78	0.92		0.83	0.61		1.54	1.13		0.65	0.82	
Uniform Delay, d1	27.0	26.0		24.9	22.7		33.0	23.6		33.8	23.7	
Progression Factor	1.33	1.34		1.00	1.00		0.96	0.92		1.00	1.00	
Incremental Delay, d2	371.1	10.3		41.2	0.7		249.4	62.2		5.1	6.6	
Delay (s)	407.0	45.2		66.1	23.4		281.0	84.0		38.9	30.3	
Level of Service	F	D		E	C		F	F		D	C	
Approach Delay (s)		116.0			27.7			129.0			31.4	
Approach LOS		F			C			F			C	

Intersection Summary			
HCM Average Control Delay	90.6	HCM Level of Service	F
HCM Volume to Capacity ratio	1.42		
Actuated Cycle Length (s)	80.0	Sum of lost time (s)	8.0
Intersection Capacity Utilization	101.8%	ICU Level of Service	G
Analysis Period (min)	15		

c Critical Lane Group

Movement	WBL	WBR	NBT	NBR	SBL	SBT
Lane Configurations						
Sign Control	Stop		Free			Free
Grade	0%		0%			0%
Volume (veh/h)	30	41	2023	40	20	860
Peak Hour Factor	0.95	0.95	0.95	0.95	0.95	0.95
Hourly flow rate (vph)	32	43	2129	42	21	905
Pedestrians	52		52			45
Lane Width (ft)	12.0		12.0			12.0
Walking Speed (ft/s)	4.0		4.0			4.0
Percent Blockage	4		4			4
Right turn flare (veh)						
Median type	None					
Median storage veh)						
Upstream signal (ft)			230			471
pX, platoon unblocked	0.73	0.66			0.66	
vC, conflicting volume	2749	1183			2224	
vC1, stage 1 conf vol						
vC2, stage 2 conf vol						
vCu, unblocked vol	2467	763			2338	
tC, single (s)	6.8	6.9			4.1	
tC, 2 stage (s)						
tF (s)	3.5	3.3			2.2	
p0 queue free %	0	80			84	
cM capacity (veh/h)	14	211			132	

Direction, Lane #	WB 1	NB 1	NB 2	SB 1	SB 2	SB 3
Volume Total	75	1420	752	21	453	453
Volume Left	32	0	0	21	0	0
Volume Right	43	0	42	0	0	0
cSH	30	1700	1700	132	1700	1700
Volume to Capacity	2.46	0.84	0.44	0.16	0.27	0.27
Queue Length 95th (ft)	219	0	0	14	0	0
Control Delay (s)	942.2	0.0	0.0	37.5	0.0	0.0
Lane LOS	F			E		
Approach Delay (s)	942.2	0.0		0.9		
Approach LOS	F					

Intersection Summary			
Average Delay	22.4		
Intersection Capacity Utilization	75.7%	ICU Level of Service	D
Analysis Period (min)	15		

Movement	EBL	EBT	EBR	WBL	WBT	WBR	NBL	NBT	NBR	SBL	SBT	SBR
Lane Configurations												
Ideal Flow (vphpl)	1900	1900	1900	1900	1900	1900	1900	1900	1900	1900	1900	1900
Total Lost time (s)		4.0		4.0	4.0			4.0		4.0	4.0	
Lane Util. Factor		0.91		1.00	0.95			1.00		1.00	1.00	
Frpb, ped/bikes		1.00		1.00	1.00			1.00		1.00	0.99	
Flpb, ped/bikes		1.00		1.00	1.00			1.00		1.00	1.00	
Frt		0.99		1.00	0.98			0.98		1.00	0.98	
Flt Protected		0.99		0.95	1.00			0.99		0.95	1.00	
Satd. Flow (prot)		5013		1768	3452			1793		1770	1806	
Flt Permitted		0.65		0.22	1.00			0.28		0.24	1.00	
Satd. Flow (perm)		3268		416	3452			501		442	1806	
Volume (vph)	160	860	40	91	1340	221	190	525	120	80	403	70
Peak-hour factor, PHF	0.98	0.98	0.98	0.98	0.98	0.98	0.98	0.98	0.98	0.98	0.98	0.98
Adj. Flow (vph)	163	878	41	93	1367	226	194	536	122	82	411	71
RTOR Reduction (vph)	0	5	0	0	17	0	0	8	0	0	8	0
Lane Group Flow (vph)	0	1077	0	93	1577	0	0	844	0	82	474	0
Confl. Peds. (#/hr)	24		4	4		24	48		12	12		48
Turn Type	Perm			Perm			Perm			Perm		
Protected Phases		4			8			2			6	
Permitted Phases	4			8			2			6		
Actuated Green, G (s)		46.0		46.0	46.0			24.0		24.0	24.0	
Effective Green, g (s)		47.0		47.0	47.0			25.0		25.0	25.0	
Actuated g/C Ratio		0.59		0.59	0.59			0.31		0.31	0.31	
Clearance Time (s)		5.0		5.0	5.0			5.0		5.0	5.0	
Lane Grp Cap (vph)		1920		244	2028			157		138	564	
v/s Ratio Prot					c0.46						0.26	
v/s Ratio Perm		0.33		0.22				c1.69		0.19		
v/c Ratio		1.66dl		0.38	0.78			5.38		0.59	0.84	
Uniform Delay, d1		10.2		8.8	12.5			27.5		23.2	25.6	
Progression Factor		1.00		1.58	1.63			1.00		0.77	0.79	
Incremental Delay, d2		1.2		3.4	2.3			1984.3		14.5	11.9	
Delay (s)		11.3		17.3	22.8			2011.8		32.3	32.2	
Level of Service		B		B	C			F		C	C	
Approach Delay (s)		11.3			22.5			2011.8			32.3	
Approach LOS		B			C			F			C	

Intersection Summary			
HCM Average Control Delay	426.0	HCM Level of Service	F
HCM Volume to Capacity ratio	2.38		
Actuated Cycle Length (s)	80.0	Sum of lost time (s)	8.0
Intersection Capacity Utilization	167.7%	ICU Level of Service	H
Analysis Period (min)	15		

dl Defacto Left Lane. Recode with 1 though lane as a left lane.
c Critical Lane Group

Movement	EBL	EBT	EBR	WBL	WBT	WBR	NBL	NBT	NBR	SBL	SBT	SBR
Lane Configurations												
Ideal Flow (vphpl)	1900	1900	1900	1900	1900	1900	1900	1900	1900	1900	1900	1900
Total Lost time (s)		4.0			4.0		4.0	4.0		4.0	4.0	
Lane Util. Factor		0.91			0.91		1.00	1.00		1.00	1.00	
Frpb, ped/bikes		1.00			1.00		1.00	1.00		1.00	1.00	
Flpb, ped/bikes		1.00			1.00		1.00	1.00		1.00	1.00	
Frt		0.99			0.99		1.00	0.96		1.00	0.98	
Flt Protected		1.00			1.00		0.95	1.00		0.95	1.00	
Satd. Flow (prot)		4998			5015		1770	1787		1766	1821	
Flt Permitted		0.76			0.79		0.38	1.00		0.20	1.00	
Satd. Flow (perm)		3800			3953		714	1787		363	1821	
Volume (vph)	60	800	70	101	1372	111	140	337	107	90	229	40
Peak-hour factor, PHF	0.95	0.95	0.95	0.95	0.95	0.95	0.95	0.95	0.95	0.95	0.95	0.95
Adj. Flow (vph)	63	842	74	106	1444	117	147	355	113	95	241	42
RTOR Reduction (vph)	0	12	0	0	11	0	0	14	0	0	8	0
Lane Group Flow (vph)	0	967	0	0	1656	0	147	454	0	95	275	0
Confl. Peds. (#/hr)			12	12					6	6		
Turn Type	Perm			Perm			Perm			Perm		
Protected Phases		4			8			2			6	
Permitted Phases	4			8			2			6		
Actuated Green, G (s)		51.5			51.5		20.5	20.5		20.5	20.5	
Effective Green, g (s)		51.5			51.5		20.5	20.5		20.5	20.5	
Actuated g/C Ratio		0.64			0.64		0.26	0.26		0.26	0.26	
Clearance Time (s)		4.0			4.0		4.0	4.0		4.0	4.0	
Lane Grp Cap (vph)		2446			2545		183	458		93	467	
v/s Ratio Prot								0.25			0.15	
v/s Ratio Perm		0.25			c0.42		0.21			c0.26		
v/c Ratio		0.40			0.65		0.80	0.99		1.02	0.59	
Uniform Delay, d1		6.8			8.7		27.9	29.7		29.8	26.1	
Progression Factor		1.17			2.04		1.00	1.00		1.20	1.20	
Incremental Delay, d2		0.0			1.0		30.0	39.9		90.4	4.4	
Delay (s)		8.0			18.8		57.9	69.5		126.1	35.7	
Level of Service		A			B		E	E		F	D	
Approach Delay (s)		8.0			18.8			66.7			58.4	
Approach LOS		A			B			E			E	

Intersection Summary			
HCM Average Control Delay	28.1	HCM Level of Service	C
HCM Volume to Capacity ratio	0.76		
Actuated Cycle Length (s)	80.0	Sum of lost time (s)	8.0
Intersection Capacity Utilization	100.4%	ICU Level of Service	G
Analysis Period (min)	15		

c Critical Lane Group

Movement	EBL	EBT	EBR	WBL	WBT	WBR	NBL	NBT	NBR	SBL	SBT	SBR
Lane Configurations												
Ideal Flow (vphpl)	1900	1900	1900	1900	1900	1900	1900	1900	1900	1900	1900	1900
Total Lost time (s)		4.0			4.0			4.0			4.0	
Lane Util. Factor		0.91			0.91			0.95			0.95	
Frpb, ped/bikes		1.00			1.00			1.00			0.99	
Flpb, ped/bikes		1.00			1.00			1.00			1.00	
Frt		0.99			0.98			0.98			0.97	
Flt Protected		1.00			1.00			0.99			0.98	
Satd. Flow (prot)		5021			4955			3433			3357	
Flt Permitted		0.73			0.82			0.73			0.57	
Satd. Flow (perm)		3659			4065			2529			1942	
Volume (vph)	74	892	50	79	1403	241	80	425	75	140	222	92
Peak-hour factor, PHF	0.99	0.99	0.99	0.99	0.99	0.99	0.99	0.99	0.99	0.99	0.99	0.99
Adj. Flow (vph)	75	901	51	80	1417	243	81	429	76	141	224	93
RTOR Reduction (vph)	0	7	0	0	28	0	0	15	0	0	28	0
Lane Group Flow (vph)	0	1020	0	0	1712	0	0	571	0	0	430	0
Confl. Peds. (#/hr)	9		17	17		9	12		10	10		12
Turn Type	Perm			Perm			Perm			Perm		
Protected Phases		4			8			2			6	
Permitted Phases	4			8			2			6		
Actuated Green, G (s)		50.0			50.0			19.0			19.0	
Effective Green, g (s)		51.5			51.5			20.5			20.5	
Actuated g/C Ratio		0.64			0.64			0.26			0.26	
Clearance Time (s)		5.5			5.5			5.5			5.5	
Lane Grp Cap (vph)		2355			2617			648			498	
v/s Ratio Prot												
v/s Ratio Perm		0.28			c0.42			c0.23			0.22	
v/c Ratio		0.43			0.65			0.88			0.94dl	
Uniform Delay, d1		7.0			8.8			28.6			28.4	
Progression Factor		1.60			2.10			1.00			1.18	
Incremental Delay, d2		0.5			1.0			15.9			17.6	
Delay (s)		11.8			19.4			44.5			51.1	
Level of Service		B			B			D			D	
Approach Delay (s)		11.8			19.4			44.5			51.1	
Approach LOS		B			B			D			D	

Intersection Summary			
HCM Average Control Delay	25.0	HCM Level of Service	C
HCM Volume to Capacity ratio	0.72		
Actuated Cycle Length (s)	80.0	Sum of lost time (s)	8.0
Intersection Capacity Utilization	126.7%	ICU Level of Service	H
Analysis Period (min)	15		

dl Defacto Left Lane. Recode with 1 though lane as a left lane.
c Critical Lane Group

Movement	EBL	EBT	EBR	WBL	WBT	WBR	NBL	NBT	NBR	SBL	SBT	SBR
Lane Configurations												
Ideal Flow (vphpl)	1900	1900	1900	1900	1900	1900	1900	1900	1900	1900	1900	1900
Total Lost time (s)		4.0			4.0			4.0			4.0	
Lane Util. Factor		0.91			0.91			1.00			1.00	
Frpb, ped/bikes		1.00			1.00			1.00			0.96	
Flpb, ped/bikes		1.00			1.00			1.00			1.00	
Frt		1.00			0.99			0.95			0.92	
Flt Protected		1.00			1.00			0.98			0.98	
Satd. Flow (prot)		5058			5031			1750			1608	
Flt Permitted		0.70			0.93			0.89			0.85	
Satd. Flow (perm)		3561			4679			1580			1394	
Volume (vph)	90	1047	10	10	1521	60	10	10	10	138	0	189
Peak-hour factor, PHF	0.96	0.96	0.95	0.95	0.96	0.96	0.95	0.95	0.95	0.96	0.95	0.96
Adj. Flow (vph)	94	1091	11	11	1584	62	11	11	11	144	0	197
RTOR Reduction (vph)	0	1	0	0	0	0	0	8	0	0	0	0
Lane Group Flow (vph)	0	1195	0	0	1657	0	0	25	0	0	341	0
Confl. Peds. (#/hr)						79						79
Turn Type	Perm			Perm			Perm			Perm		
Protected Phases		4			8			2			6	
Permitted Phases	4			8			2			6		
Actuated Green, G (s)		47.2			47.2			24.8			24.8	
Effective Green, g (s)		47.2			47.2			24.8			24.8	
Actuated g/C Ratio		0.59			0.59			0.31			0.31	
Clearance Time (s)		4.0			4.0			4.0			4.0	
Vehicle Extension (s)		3.0			3.0			3.0			3.0	
Lane Grp Cap (vph)		2101			2761			490			432	
v/s Ratio Prot												
v/s Ratio Perm		0.34			c0.35			0.02			c0.24	
v/c Ratio		0.57			0.60			0.05			0.79	
Uniform Delay, d1		10.1			10.4			19.4			25.2	
Progression Factor		1.47			1.00			1.00			1.28	
Incremental Delay, d2		1.0			1.0			0.0			9.1	
Delay (s)		15.9			11.4			19.4			41.3	
Level of Service		B			B			B			D	
Approach Delay (s)		15.9			11.4			19.4			41.3	
Approach LOS		B			B			B			D	

Intersection Summary			
HCM Average Control Delay	16.3	HCM Level of Service	B
HCM Volume to Capacity ratio	0.67		
Actuated Cycle Length (s)	80.0	Sum of lost time (s)	8.0
Intersection Capacity Utilization	92.4%	ICU Level of Service	F
Analysis Period (min)	15		

c Critical Lane Group

Movement	EBL	EBT	EBR	WBL	WBT	WBR	NBL	NBT	NBR	SBL	SBT	SBR
Lane Configurations												
Ideal Flow (vphpl)	1900	1900	1900	1900	1900	1900	1900	1900	1900	1900	1900	1900
Total Lost time (s)		4.0			4.0		4.0	4.0		4.0	4.0	
Lane Util. Factor		0.91			0.91		1.00	0.95		1.00	0.95	
Frpb, ped/bikes		1.00			0.99		1.00	0.99		1.00	0.99	
Flpb, ped/bikes		1.00			1.00		0.99	1.00		1.00	1.00	
Frt		0.99			0.96		1.00	0.99		1.00	0.98	
Flt Protected		0.98			1.00		0.95	1.00		0.95	1.00	
Satd. Flow (prot)		4915			4807		1748	3459		1770	3437	
Flt Permitted		0.68			0.71		0.22	1.00		0.11	1.00	
Satd. Flow (perm)		3380			3420		413	3459		213	3437	
Volume (vph)	389	695	111	110	1174	467	280	1208	110	195	598	97
Peak-hour factor, PHF	0.95	0.95	0.95	0.95	0.95	0.95	0.95	0.95	0.95	0.95	0.95	0.95
Adj. Flow (vph)	409	732	117	116	1236	492	295	1272	116	205	629	102
RTOR Reduction (vph)	0	7	0	0	1	0	0	7	0	0	12	0
Lane Group Flow (vph)	0	1251	0	0	1843	0	295	1381	0	205	719	0
Confl. Peds. (#/hr)	26		19			26	39		92	92		39
Turn Type	Perm			pm+pt			Perm			Perm		
Protected Phases		4		3	8			2			6	
Permitted Phases	4			8			2			6		
Actuated Green, G (s)		56.6			56.6		34.0	34.0		34.0	34.0	
Effective Green, g (s)		58.1			58.1		35.0	35.0		35.0	35.0	
Actuated g/C Ratio		0.57			0.57		0.35	0.35		0.35	0.35	
Clearance Time (s)		5.5			5.5		5.0	5.0		5.0	5.0	
Vehicle Extension (s)		2.0			2.0		2.0	2.0		2.0	2.0	
Lane Grp Cap (vph)		1942			1965		143	1197		74	1190	
v/s Ratio Prot								0.40			0.21	
v/s Ratio Perm		0.37			c0.54		0.71			c0.96		
v/c Ratio		2.56dl			0.94		2.06	1.15		2.77	0.60	
Uniform Delay, d1		14.5			19.8		33.0	33.0		33.0	27.3	
Progression Factor		1.00			1.00		1.00	1.00		1.00	1.00	
Incremental Delay, d2		0.6			9.1		501.6	79.2		833.0	2.3	
Delay (s)		15.1			28.9		534.7	112.3		866.1	29.6	
Level of Service		B			C		F	F		F	C	
Approach Delay (s)		15.1			28.9			186.3			212.8	
Approach LOS		B			C			F			F	

Intersection Summary			
HCM Average Control Delay	102.3	HCM Level of Service	F
HCM Volume to Capacity ratio	1.63		
Actuated Cycle Length (s)	101.1	Sum of lost time (s)	8.0
Intersection Capacity Utilization	121.5%	ICU Level of Service	H
Analysis Period (min)	15		

dl Defacto Left Lane. Recode with 1 though lane as a left lane.
c Critical Lane Group

Movement	EBL	EBT	EBR	WBL	WBT	WBR	NBL	NBT	NBR	SBL	SBT	SBR
Lane Configurations												
Ideal Flow (vphpl)	1900	1900	1900	1900	1900	1900	1900	1900	1900	1900	1900	1900
Total Lost time (s)		4.0			4.0			4.0	4.0		4.0	
Lane Util. Factor		0.91			0.91			1.00	1.00		1.00	
Frpb, ped/bikes		1.00			1.00			1.00	0.89		0.94	
Flpb, ped/bikes		1.00			1.00			0.96	1.00		0.98	
Frt		1.00			1.00			1.00	0.85		0.93	
Flt Protected		1.00			1.00			0.98	1.00		0.99	
Satd. Flow (prot)		5029			5027			1753	1406		1580	
Flt Permitted		0.78			0.78			0.77	1.00		0.90	
Satd. Flow (perm)		3943			3928			1384	1406		1438	
Volume (vph)	50	927	34	110	1597	50	104	104	200	40	40	90
Peak-hour factor, PHF	0.99	0.99	0.99	0.99	0.99	0.99	0.99	0.99	0.99	0.99	0.99	0.99
Adj. Flow (vph)	51	936	34	111	1613	51	105	105	202	40	40	91
RTOR Reduction (vph)	0	4	0	0	4	0	0	0	64	0	13	0
Lane Group Flow (vph)	0	1017	0	0	1771	0	0	210	138	0	158	0
Confl. Peds. (#/hr)	100		100	100		100	100		100	100		100
Turn Type	Perm			Perm			Perm		Perm	Perm		
Protected Phases		4			8			2			6	
Permitted Phases	4			8			2		2	6		
Actuated Green, G (s)		49.5			49.5			24.5	24.5		24.5	
Effective Green, g (s)		48.5			48.5			23.5	23.5		23.5	
Actuated g/C Ratio		0.61			0.61			0.29	0.29		0.29	
Clearance Time (s)		3.0			3.0			3.0	3.0		3.0	
Lane Grp Cap (vph)		2390			2381			407	413		422	
v/s Ratio Prot												
v/s Ratio Perm		0.26			c0.45			c0.15	0.10		0.11	
v/c Ratio		0.43			0.74			0.52	0.33		0.37	
Uniform Delay, d1		8.4			11.3			23.5	22.1		22.4	
Progression Factor		1.00			1.00			1.00	1.00		1.00	
Incremental Delay, d2		0.6			2.2			4.6	2.2		2.5	
Delay (s)		8.9			13.4			28.1	24.3		24.9	
Level of Service		A			B			C	C		C	
Approach Delay (s)		8.9			13.4			26.2			24.9	
Approach LOS		A			B			C			C	

Intersection Summary			
HCM Average Control Delay	14.2	HCM Level of Service	B
HCM Volume to Capacity ratio	0.67		
Actuated Cycle Length (s)	80.0	Sum of lost time (s)	8.0
Intersection Capacity Utilization	111.8%	ICU Level of Service	H
Analysis Period (min)	15		

c Critical Lane Group

Movement	EBL	EBT	EBR	WBL	WBT	WBR	NBL	NBT	NBR	SBL	SBT	SBR
Lane Configurations												
Ideal Flow (vphpl)	1900	1900	1900	1900	1900	1900	1900	1900	1900	1900	1900	1900
Total Lost time (s)	4.0	4.0		4.0	4.0		4.0	4.0	4.0	4.0	4.0	4.0
Lane Util. Factor	1.00	0.91		1.00	0.91		1.00	0.95	1.00	1.00	0.95	1.00
Frpb, ped/bikes	1.00	0.98		1.00	0.99		1.00	1.00	0.94	1.00	1.00	0.95
Flpb, ped/bikes	1.00	1.00		1.00	1.00		1.00	1.00	1.00	1.00	1.00	1.00
Frt	1.00	0.98		1.00	0.97		1.00	1.00	0.85	1.00	1.00	0.85
Flt Protected	0.95	1.00		0.95	1.00		0.95	1.00	1.00	0.95	1.00	1.00
Satd. Flow (prot)	1770	4912		1770	4864		1770	3539	1489	1770	3539	1499
Flt Permitted	0.95	1.00		0.95	1.00		0.95	1.00	1.00	0.95	1.00	1.00
Satd. Flow (perm)	1770	4912		1770	4864		1770	3539	1489	1770	3539	1499
Volume (vph)	230	795	111	130	1237	360	310	1181	290	510	511	180
Peak-hour factor, PHF	0.95	0.95	0.95	0.95	0.95	0.95	0.95	0.95	0.95	0.95	0.95	0.95
Adj. Flow (vph)	242	837	117	137	1302	379	326	1243	305	537	538	189
RTOR Reduction (vph)	0	15	0	0	44	0	0	0	11	0	0	45
Lane Group Flow (vph)	242	939	0	137	1637	0	326	1243	294	537	538	144
Confl. Peds. (#/hr)			81			22			50			43
Turn Type	Prot			Prot			Prot		pm+ov	Prot		pm+ov
Protected Phases	7	4		3	8		5	2	3	1	6	7
Permitted Phases									2			6
Actuated Green, G (s)	12.0	33.2		12.8	34.0		25.4	33.0	45.8	25.0	32.6	44.6
Effective Green, g (s)	11.0	34.2		11.8	35.0		24.4	34.0	45.8	24.0	33.6	44.6
Actuated g/C Ratio	0.09	0.29		0.10	0.29		0.20	0.28	0.38	0.20	0.28	0.37
Clearance Time (s)	3.0	5.0		3.0	5.0		3.0	5.0	3.0	3.0	5.0	3.0
Vehicle Extension (s)	3.0	3.0		3.0	3.0		3.0	3.0	3.0	3.0	3.0	3.0
Lane Grp Cap (vph)	162	1400		174	1419		360	1003	618	354	991	607
v/s Ratio Prot	c0.14	0.19		0.08	c0.34		0.18	c0.35	0.05	c0.30	0.15	0.02
v/s Ratio Perm									0.15			0.07
v/c Ratio	1.49	0.67		0.79	1.15		0.91	1.24	0.48	1.52	0.54	0.24
Uniform Delay, d1	54.5	37.9		52.9	42.5		46.7	43.0	28.0	48.0	36.7	26.0
Progression Factor	1.00	1.00		1.00	1.00		1.00	1.00	1.00	1.00	1.00	1.00
Incremental Delay, d2	251.9	2.6		20.6	77.6		25.3	116.3	0.6	246.7	2.1	0.2
Delay (s)	306.4	40.5		73.4	120.1		71.9	159.3	28.6	294.7	38.8	26.2
Level of Service	F	D		E	F		E	F	C	F	D	C
Approach Delay (s)		94.3			116.6			122.8			145.6	
Approach LOS		F			F			F			F	

Intersection Summary			
HCM Average Control Delay	120.1	HCM Level of Service	F
HCM Volume to Capacity ratio	1.21		
Actuated Cycle Length (s)	120.0	Sum of lost time (s)	8.0
Intersection Capacity Utilization	119.4%	ICU Level of Service	H
Analysis Period (min)	15		

c Critical Lane Group

Movement	EBL	EBT	EBR	WBL	WBT	WBR	NBL	NBT	NBR	SBL	SBT	SBR
Lane Configurations												
Ideal Flow (vphpl)	1900	1900	1900	1900	1900	1900	1900	1900	1900	1900	1900	1900
Total Lost time (s)		4.0			4.0		4.0	4.0		4.0	4.0	
Lane Util. Factor		1.00			1.00		1.00	0.95		1.00	0.95	
Frpb, ped/bikes		0.93			0.96		1.00	0.99		1.00	0.99	
Flpb, ped/bikes		0.98			0.97		0.96	1.00		0.98	1.00	
Frt		0.95			0.95		1.00	0.99		1.00	0.99	
Flt Protected		0.98			0.98		0.95	1.00		0.95	1.00	
Satd. Flow (prot)		1585			1616		1705	3487		1729	3446	
Flt Permitted		0.66			0.72		0.25	1.00		0.17	1.00	
Satd. Flow (perm)		1063			1181		444	3487		318	3446	
Volume (vph)	131	60	100	120	80	103	50	1103	50	42	854	73
Peak-hour factor, PHF	0.95	0.95	0.95	0.95	0.95	0.95	0.95	0.95	0.95	0.95	0.95	0.95
Adj. Flow (vph)	138	63	105	126	84	108	53	1161	53	44	899	77
RTOR Reduction (vph)	0	23	0	0	22	0	0	4	0	0	7	0
Lane Group Flow (vph)	0	283	0	0	296	0	53	1210	0	44	969	0
Confl. Peds. (#/hr)	100		100	100		100	100		100	100		100
Turn Type	Perm			Perm			Perm			Perm		
Protected Phases		4			4			2			6	
Permitted Phases	4			4			2			6		
Actuated Green, G (s)		23.7			23.7		54.3	54.3		54.3	54.3	
Effective Green, g (s)		23.2			23.2		53.8	53.8		53.8	53.8	
Actuated g/C Ratio		0.27			0.27		0.63	0.63		0.63	0.63	
Clearance Time (s)		3.5			3.5		3.5	3.5		3.5	3.5	
Vehicle Extension (s)		2.0			2.0		2.0	2.0		2.0	2.0	
Lane Grp Cap (vph)		290			322		281	2207		201	2181	
v/s Ratio Prot								c0.35			0.28	
v/s Ratio Perm		c0.27			0.25		0.12			0.14		
v/c Ratio		0.98			0.92		0.19	0.55		0.22	0.44	
Uniform Delay, d1		30.6			30.0		6.5	8.8		6.6	8.0	
Progression Factor		1.00			1.00		1.00	1.00		1.00	1.00	
Incremental Delay, d2		46.0			29.5		1.5	1.0		2.5	0.7	
Delay (s)		76.6			59.5		8.0	9.8		9.1	8.6	
Level of Service		E			E		A	A		A	A	
Approach Delay (s)		76.6			59.5			9.7			8.6	
Approach LOS		E			E			A			A	

Intersection Summary			
HCM Average Control Delay	21.8	HCM Level of Service	C
HCM Volume to Capacity ratio	0.68		
Actuated Cycle Length (s)	85.0	Sum of lost time (s)	8.0
Intersection Capacity Utilization	71.0%	ICU Level of Service	C
Analysis Period (min)	15		

c Critical Lane Group

Movement	EBL	EBT	EBR	WBL	WBT	WBR	NBL	NBT	NBR	SBL	SBT	SBR
Lane Configurations												
Ideal Flow (vphpl)	1900	1900	1900	1900	1900	1900	1900	1900	1900	1900	1900	1900
Total Lost time (s)	4.0	4.0		4.0	4.0		4.0	4.0		4.0	4.0	
Lane Util. Factor	1.00	0.95		1.00	0.95		1.00	0.95		1.00	0.95	
Frpb, ped/bikes	1.00	0.98		1.00	0.93		1.00	0.99		1.00	0.94	
Flpb, ped/bikes	1.00	1.00		1.00	1.00		0.96	1.00		0.98	1.00	
Frt	1.00	0.97		1.00	0.95		1.00	0.99		1.00	0.95	
Flt Protected	0.95	1.00		0.95	1.00		0.95	1.00		0.95	1.00	
Satd. Flow (prot)	1770	3370		1770	3139		1704	3489		1733	3135	
Flt Permitted	0.95	1.00		0.95	1.00		0.23	1.00		0.22	1.00	
Satd. Flow (perm)	1770	3370		1770	3139		415	3489		394	3135	
Volume (vph)	230	560	120	90	530	254	200	840	50	230	544	310
Peak-hour factor, PHF	0.98	0.98	0.98	0.98	0.98	0.98	0.98	0.98	0.98	0.98	0.98	0.98
Adj. Flow (vph)	235	571	122	92	541	259	204	857	51	235	555	316
RTOR Reduction (vph)	0	20	0	0	46	0	0	5	0	0	95	0
Lane Group Flow (vph)	235	673	0	92	754	0	204	903	0	235	776	0
Confl. Peds. (#/hr)			100			100	100		100	100		100
Turn Type	Prot			Prot			Perm			Perm		
Protected Phases	7	4		3	8			2			6	
Permitted Phases							2			6		
Actuated Green, G (s)	10.5	26.0		7.3	22.8		38.2	38.2		38.2	38.2	
Effective Green, g (s)	11.0	25.5		7.8	22.3		39.7	39.7		39.7	39.7	
Actuated g/C Ratio	0.13	0.30		0.09	0.26		0.47	0.47		0.47	0.47	
Clearance Time (s)	4.5	3.5		4.5	3.5		5.5	5.5		5.5	5.5	
Vehicle Extension (s)	2.0	2.0		2.0	2.0		2.0	2.0		2.0	2.0	
Lane Grp Cap (vph)	229	1011		162	824		194	1630		184	1464	
v/s Ratio Prot	c0.13	c0.20		0.05	c0.24			0.26			0.25	
v/s Ratio Perm							0.49			c0.60		
v/c Ratio	1.03	0.67		0.57	0.92		1.05	0.55		1.28	0.53	
Uniform Delay, d1	37.0	26.0		37.0	30.4		22.6	16.3		22.6	16.0	
Progression Factor	1.00	1.00		1.00	1.00		1.00	1.00		1.00	1.00	
Incremental Delay, d2	66.4	1.3		2.7	14.4		78.9	1.4		159.9	1.4	
Delay (s)	103.4	27.3		39.7	44.8		101.5	17.6		182.5	17.4	
Level of Service	F	C		D	D		F	B		F	B	
Approach Delay (s)		46.6			44.3			33.0			52.5	
Approach LOS		D			D			C			D	

Intersection Summary			
HCM Average Control Delay	44.0	HCM Level of Service	D
HCM Volume to Capacity ratio	1.18		
Actuated Cycle Length (s)	85.0	Sum of lost time (s)	16.0
Intersection Capacity Utilization	89.0%	ICU Level of Service	E
Analysis Period (min)	15		

c Critical Lane Group

Movement	EBL	EBR	NBL	NBT	SBT	SBR
Lane Configurations						
Ideal Flow (vphpl)	1900	1900	1900	1900	1900	1900
Total Lost time (s)	4.0	4.0	4.0	4.0	4.0	
Lane Util. Factor	1.00	1.00	1.00	0.95	0.95	
Frt	1.00	0.85	1.00	1.00	0.98	
Flt Protected	0.95	1.00	0.95	1.00	1.00	
Satd. Flow (prot)	1770	1583	1770	3539	3464	
Flt Permitted	0.95	1.00	0.95	1.00	1.00	
Satd. Flow (perm)	1770	1583	1770	3539	3464	
Volume (vph)	43	98	89	1975	752	124
Peak-hour factor, PHF	0.95	0.95	0.95	0.95	0.95	0.95
Adj. Flow (vph)	45	103	94	2079	792	131
RTOR Reduction (vph)	0	80	0	0	13	0
Lane Group Flow (vph)	45	23	94	2079	910	0
Turn Type		Perm	Prot			
Protected Phases	2		3	8	4	
Permitted Phases		2				
Actuated Green, G (s)	17.7	17.7	7.2	53.8	42.1	
Effective Green, g (s)	18.2	18.2	7.2	53.8	42.6	
Actuated g/C Ratio	0.23	0.23	0.09	0.67	0.53	
Clearance Time (s)	4.5	4.5	4.0	4.0	4.5	
Vehicle Extension (s)	3.0	3.0	3.0	3.0	3.0	
Lane Grp Cap (vph)	403	360	159	2380	1845	
v/s Ratio Prot	c0.03		0.05	c0.59	0.26	
v/s Ratio Perm		0.01				
v/c Ratio	0.11	0.07	0.59	0.87	0.49	
Uniform Delay, d1	24.5	24.2	35.0	10.4	11.9	
Progression Factor	1.00	1.00	1.00	1.00	1.38	
Incremental Delay, d2	0.1	0.1	5.8	4.8	0.5	
Delay (s)	24.6	24.3	40.8	15.2	16.9	
Level of Service	C	C	D	B	B	
Approach Delay (s)	24.4			16.3	16.9	
Approach LOS	C			B	B	

Intersection Summary			
HCM Average Control Delay	16.9	HCM Level of Service	B
HCM Volume to Capacity ratio	0.68		
Actuated Cycle Length (s)	80.0	Sum of lost time (s)	8.0
Intersection Capacity Utilization	64.6%	ICU Level of Service	C
Analysis Period (min)	15		

c Critical Lane Group

Movement	EBL	EBT	EBR	WBL	WBT	WBR	NBL	NBT	NBR	SBL	SBT	SBR
Lane Configurations												
Ideal Flow (vphpl)	1900	1900	1900	1900	1900	1900	1900	1900	1900	1900	1900	1900
Total Lost time (s)		4.0		4.0	4.0			4.0		4.0	4.0	
Lane Util. Factor		1.00		0.95	0.95			0.95		1.00	0.95	
Frpb, ped/bikes		1.00		1.00	0.99			0.99		1.00	0.97	
Flpb, ped/bikes		1.00		1.00	1.00			1.00		1.00	1.00	
Frt		0.95		1.00	0.91			0.97		1.00	0.96	
Flt Protected		0.98		0.95	1.00			1.00		0.95	1.00	
Satd. Flow (prot)		1749		1681	1597			3417		1770	3291	
Flt Permitted		0.53		0.74	1.00			0.75		0.95	1.00	
Satd. Flow (perm)		948		1302	1597			2556		1770	3291	
Volume (vph)	10	10	10	354	330	470	10	1168	246	110	1329	460
Peak-hour factor, PHF	0.95	0.95	0.95	0.95	0.95	0.95	0.95	0.95	0.95	0.95	0.95	0.95
Adj. Flow (vph)	11	11	11	373	347	495	11	1229	259	116	1399	484
RTOR Reduction (vph)	0	10	0	0	57	0	0	18	0	0	36	0
Lane Group Flow (vph)	0	23	0	373	785	0	0	1481	0	116	1847	0
Confl. Peds. (#/hr)	4					4	44		12	12		44
Turn Type	Perm			Perm			Perm			Prot		
Protected Phases		7			8			2		1	6	
Permitted Phases	7			8			2					
Actuated Green, G (s)		4.5		26.5	26.5			36.0		5.0	45.5	
Effective Green, g (s)		5.0		27.0	27.0			36.5		5.5	46.0	
Actuated g/C Ratio		0.06		0.30	0.30			0.41		0.06	0.51	
Clearance Time (s)		4.5		4.5	4.5			4.5		4.5	4.5	
Vehicle Extension (s)		2.0		2.0	2.0			2.0		2.0	2.0	
Lane Grp Cap (vph)		53		391	479			1037		108	1682	
v/s Ratio Prot										0.07	c0.56	
v/s Ratio Perm		c0.02		0.29	0.49			c0.58				
v/c Ratio		0.43		0.95	1.64			1.43		1.07	1.10	
Uniform Delay, d1		41.1		30.9	31.5			26.8		42.2	22.0	
Progression Factor		1.00		1.00	1.00			1.02		1.00	1.00	
Incremental Delay, d2		2.0		33.3	296.4			194.0		108.0	54.0	
Delay (s)		43.1		64.2	327.9			221.3		150.2	76.0	
Level of Service		D		E	F			F		F	E	
Approach Delay (s)		43.1			247.0			221.3			80.3	
Approach LOS		D			F			F			F	

Intersection Summary			
HCM Average Control Delay	167.3	HCM Level of Service	F
HCM Volume to Capacity ratio	1.43		
Actuated Cycle Length (s)	90.0	Sum of lost time (s)	16.0
Intersection Capacity Utilization	137.8%	ICU Level of Service	H
Analysis Period (min)	15		

c Critical Lane Group

Movement	EBL	EBT	EBR	WBL	WBT	WBR	NBL	NBT	NBR	SBL	SBT	SBR
Lane Configurations												
Ideal Flow (vphpl)	1900	1900	1900	1900	1900	1900	1900	1900	1900	1900	1900	1900
Total Lost time (s)	4.0	4.0		4.0	4.0		4.0	4.0		4.0	4.0	
Lane Util. Factor	1.00	0.95		1.00	0.95		1.00	0.95		1.00	0.95	
Frpb, ped/bikes	1.00	0.90		1.00	0.97		1.00	0.98		1.00	0.97	
Flpb, ped/bikes	1.00	1.00		1.00	1.00		1.00	1.00		0.98	1.00	
Frt	1.00	0.94		1.00	0.98		1.00	0.98		1.00	0.97	
Flt Protected	0.95	1.00		0.95	1.00		0.95	1.00		0.95	1.00	
Satd. Flow (prot)	1770	3005		1770	3390		1770	3421		1736	3328	
Flt Permitted	0.13	1.00		0.13	1.00		0.06	1.00		0.37	1.00	
Satd. Flow (perm)	248	3005		248	3390		120	3421		674	3328	
Volume (vph)	146	421	267	120	716	90	135	509	59	100	1318	320
Peak-hour factor, PHF	0.95	0.95	0.95	0.95	0.95	0.95	0.95	0.95	0.95	0.95	0.95	0.95
Adj. Flow (vph)	154	443	281	126	754	95	142	536	62	105	1387	337
RTOR Reduction (vph)	0	82	0	0	8	0	0	7	0	0	18	0
Lane Group Flow (vph)	154	642	0	126	841	0	142	591	0	105	1706	0
Confl. Peds. (#/hr)	72		137	137		72			58	58		92
Turn Type	pm pt			pm pt			pm pt			pm pt		
Protected Phases	7	4		3	8		5	2		1	6	
Permitted Phases	4			8			2			6		
Actuated Green, G (s)	35.5	29.5		35.5	29.5		67.0	61.5		67.0	61.5	
Effective Green, g (s)	36.0	30.0		36.0	30.0		68.0	62.0		68.0	62.0	
Actuated g/C Ratio	0.30	0.25		0.30	0.25		0.57	0.52		0.57	0.52	
Clearance Time (s)	4.0	4.5		4.0	4.5		4.5	4.5		4.5	4.5	
Vehicle Extension (s)	3.0	2.0		3.0	2.0		2.0	2.0		2.0	2.0	
Lane Grp Cap (vph)	151	751		151	848		151	1768		435	1719	
v/s Ratio Prot	c0.05	0.21		0.04	0.25		c0.05	0.17		0.01	c0.51	
v/s Ratio Perm	c0.26			0.21			0.49			0.12		
v/c Ratio	1.02	0.86		0.83	0.99		0.94	0.33		0.24	0.99	
Uniform Delay, d1	39.8	42.9		34.9	44.9		31.2	16.9		12.3	28.8	
Progression Factor	1.08	1.12		1.00	1.00		1.57	1.12		1.00	1.00	
Incremental Delay, d2	74.2	8.1		30.9	28.6		54.1	0.5		0.1	20.0	
Delay (s)	117.4	56.2		65.8	73.5		103.2	19.4		12.4	48.8	
Level of Service	F	E		E	E		F	B		B	D	
Approach Delay (s)		66.9			72.5			35.5			46.7	
Approach LOS		E			E			D			D	

Intersection Summary			
HCM Average Control Delay	54.5	HCM Level of Service	D
HCM Volume to Capacity ratio	1.00		
Actuated Cycle Length (s)	120.0	Sum of lost time (s)	16.0
Intersection Capacity Utilization	99.9%	ICU Level of Service	F
Analysis Period (min)	15		

c Critical Lane Group

Movement	EBL	EBT	EBR	WBL	WBT	WBR	NBL	NBT	NBR	SBL	SBT	SBR
Lane Configurations												
Ideal Flow (vphpl)	1900	1900	1900	1900	1900	1900	1900	1900	1900	1900	1900	1900
Total Lost time (s)		4.0		4.0	4.0		4.0	4.0		4.0	4.0	
Lane Util. Factor		0.91		1.00	0.95		1.00	1.00		1.00	1.00	
Frpb, ped/bikes		1.00		1.00	1.00		1.00	0.97		1.00	0.99	
Flpb, ped/bikes		1.00		1.00	1.00		1.00	1.00		0.96	1.00	
Frt		0.99		1.00	0.98		1.00	0.95		1.00	0.96	
Flt Protected		0.99		0.95	1.00		0.95	1.00		0.95	1.00	
Satd. Flow (prot)		4980		1762	3446		1770	1726		1703	1759	
Flt Permitted		0.66		0.21	1.00		0.10	1.00		0.50	1.00	
Satd. Flow (perm)		3327		391	3446		189	1726		891	1759	
Volume (vph)	210	709	50	71	1094	191	100	183	90	200	493	200
Peak-hour factor, PHF	0.95	0.95	0.95	0.95	0.95	0.95	0.95	0.95	0.95	0.95	0.95	0.95
Adj. Flow (vph)	221	746	53	75	1152	201	105	193	95	211	519	211
RTOR Reduction (vph)	0	5	0	0	13	0	0	16	0	0	13	0
Lane Group Flow (vph)	0	1015	0	75	1340	0	105	272	0	211	717	0
Confl. Peds. (#/hr)	24		18	18		24	24		48	48		24
Turn Type	Perm			Perm			Perm			Perm		
Protected Phases		4			8			2			6	
Permitted Phases	4			8			2			6		
Actuated Green, G (s)		51.0		51.0	51.0		49.0	49.0		49.0	49.0	
Effective Green, g (s)		52.0		52.0	52.0		50.0	50.0		50.0	50.0	
Actuated g/C Ratio		0.47		0.47	0.47		0.45	0.45		0.45	0.45	
Clearance Time (s)		5.0		5.0	5.0		5.0	5.0		5.0	5.0	
Lane Grp Cap (vph)		1573		185	1629		86	785		405	800	
v/s Ratio Prot					c0.39			0.16			0.41	
v/s Ratio Perm		0.31		0.19			c0.56			0.24		
v/c Ratio		3.03dl		0.41	0.82		1.22	0.35		0.52	0.90	
Uniform Delay, d1		22.0		18.9	25.0		30.0	19.4		21.4	27.6	
Progression Factor		1.00		1.00	1.00		1.00	1.00		1.00	1.00	
Incremental Delay, d2		2.1		6.5	4.8		167.9	1.2		4.7	14.8	
Delay (s)		24.1		25.4	29.9		197.9	20.6		26.2	42.4	
Level of Service		C		C	C		F	C		C	D	
Approach Delay (s)		24.1			29.6			68.0			38.7	
Approach LOS		C			C			E			D	

Intersection Summary			
HCM Average Control Delay	34.4	HCM Level of Service	C
HCM Volume to Capacity ratio	1.02		
Actuated Cycle Length (s)	110.0	Sum of lost time (s)	8.0
Intersection Capacity Utilization	142.6%	ICU Level of Service	H
Analysis Period (min)	15		

dl Defacto Left Lane. Recode with 1 though lane as a left lane.
c Critical Lane Group

Movement	EBL	EBT	EBR	WBL	WBT	WBR	NBL	NBT	NBR	SBL	SBT	SBR
Lane Configurations												
Ideal Flow (vphpl)	1900	1900	1900	1900	1900	1900	1900	1900	1900	1900	1900	1900
Total Lost time (s)		3.4			3.4		3.4	3.4		3.4	3.4	
Lane Util. Factor		0.91			0.91		1.00	0.95		1.00	0.95	
Frpb, ped/bikes		1.00			0.99		1.00	0.99		1.00	0.99	
Flpb, ped/bikes		1.00			1.00		1.00	1.00		1.00	1.00	
Frt		0.98			0.98		1.00	0.97		1.00	0.97	
Flt Protected		0.99			0.99		0.95	1.00		0.95	1.00	
Satd. Flow (prot)		4932			4914		1770	3402		1763	3421	
Flt Permitted		0.64			0.64		0.12	1.00		0.29	1.00	
Satd. Flow (perm)		3163			3150		224	3402		530	3421	
Volume (vph)	147	988	187	200	1146	190	120	375	90	364	1139	239
Peak-hour factor, PHF	0.95	0.95	0.95	0.95	0.95	0.95	0.95	0.95	0.95	0.95	0.95	0.95
Adj. Flow (vph)	155	1040	197	211	1206	200	126	395	95	383	1199	252
RTOR Reduction (vph)	0	15	0	0	15	0	0	17	0	0	14	0
Lane Group Flow (vph)	0	1377	0	0	1602	0	126	473	0	383	1437	0
Confl. Peds. (#/hr)	40		9			40	25		31	31		25
Turn Type	Perm			pm pt			pm pt			pm pt		
Protected Phases		4		3	8		5	2		1	6	
Permitted Phases	4			8			2			6		
Actuated Green, G (s)		56.0			56.0		36.1	31.6		54.0	46.0	
Effective Green, g (s)		57.6			57.6		37.8	33.2		55.6	47.6	
Actuated g/C Ratio		0.48			0.48		0.31	0.28		0.46	0.40	
Clearance Time (s)		5.0			5.0		3.5	5.0		3.5	5.0	
Vehicle Extension (s)		2.0			2.0		3.0	2.0		3.0	2.0	
Lane Grp Cap (vph)		1518			1512		130	941		441	1357	
v/s Ratio Prot							0.04	0.14		c0.14	c0.42	
v/s Ratio Perm		0.44			c0.51		0.27			0.27		
v/c Ratio		1.42dl			2.22dl		0.97	0.50		0.87	1.06	
Uniform Delay, d1		28.7			31.2		40.9	36.5		23.6	36.2	
Progression Factor		0.87			1.00		1.09	1.07		0.62	0.60	
Incremental Delay, d2		7.3			40.7		66.7	1.8		12.7	38.5	
Delay (s)		32.3			71.9		111.3	40.9		27.3	60.4	
Level of Service		C			E		F	D		C	E	
Approach Delay (s)		32.3			71.9			55.3			53.5	
Approach LOS		C			E			E			D	

Intersection Summary			
HCM Average Control Delay	53.8	HCM Level of Service	D
HCM Volume to Capacity ratio	1.06		
Actuated Cycle Length (s)	120.0	Sum of lost time (s)	10.2
Intersection Capacity Utilization	116.7%	ICU Level of Service	H
Analysis Period (min)	15		

dl Defacto Left Lane. Recode with 1 though lane as a left lane.
c Critical Lane Group

Movement	EBL	EBT	EBR	WBL	WBT	WBR	NBL	NBT	NBR	SBL	SBT	SBR
Lane Configurations												
Ideal Flow (vphpl)	1900	1900	1900	1900	1900	1900	1900	1900	1900	1900	1900	1900
Total Lost time (s)	4.0	4.0		4.0	4.0		4.0	4.0	4.0	4.0	4.0	4.0
Lane Util. Factor	1.00	0.91		1.00	0.91		1.00	0.95	1.00	1.00	0.95	1.00
Frpb, ped/bikes	1.00	0.99		1.00	0.99		1.00	1.00	0.96	1.00	1.00	0.96
Flpb, ped/bikes	1.00	1.00		1.00	1.00		1.00	1.00	1.00	1.00	1.00	1.00
Frt	1.00	0.98		1.00	0.96		1.00	1.00	0.85	1.00	1.00	0.85
Flt Protected	0.95	1.00		0.95	1.00		0.95	1.00	1.00	0.95	1.00	1.00
Satd. Flow (prot)	1770	4923		1770	4839		1770	3539	1515	1770	3539	1523
Flt Permitted	0.95	1.00		0.95	1.00		0.95	1.00	1.00	0.95	1.00	1.00
Satd. Flow (perm)	1770	4923		1770	4839		1770	3539	1515	1770	3539	1523
Volume (vph)	170	1207	171	210	1144	380	140	421	130	390	1441	250
Peak-hour factor, PHF	0.95	0.95	0.95	0.95	0.95	0.95	0.95	0.95	0.95	0.95	0.95	0.95
Adj. Flow (vph)	179	1271	180	221	1204	400	147	443	137	411	1517	263
RTOR Reduction (vph)	0	15	0	0	50	0	0	0	33	0	0	13
Lane Group Flow (vph)	179	1436	0	221	1554	0	147	443	104	411	1517	250
Confl. Peds. (#/hr)			66			23			38			26
Turn Type	Prot			Prot			Prot		pm ov	Prot		pm ov
Protected Phases	7	4		3	8		5	2	3	1	6	7
Permitted Phases									2			6
Actuated Green, G (s)	12.0	32.0		15.0	35.0		11.0	28.0	43.0	29.0	46.0	58.0
Effective Green, g (s)	11.0	33.0		14.0	36.0		10.0	29.0	43.0	28.0	47.0	58.0
Actuated g/C Ratio	0.09	0.28		0.12	0.30		0.08	0.24	0.36	0.23	0.39	0.48
Clearance Time (s)	3.0	5.0		3.0	5.0		3.0	5.0	3.0	3.0	5.0	3.0
Vehicle Extension (s)	2.0	2.0		2.0	2.0		2.0	2.0	2.0	2.0	2.0	2.0
Lane Grp Cap (vph)	162	1354		207	1452		148	855	593	413	1386	736
v/s Ratio Prot	0.10	0.29		c0.12	c0.32		c0.08	0.13	0.02	0.23	c0.43	0.03
v/s Ratio Perm									0.05			0.13
v/c Ratio	1.10	1.06		1.07	1.07		0.99	0.52	0.18	1.00	1.09	0.34
Uniform Delay, d1	54.5	43.5		53.0	42.0		55.0	39.4	26.4	45.9	36.5	19.2
Progression Factor	1.00	1.00		1.00	1.00		1.00	1.00	1.00	1.00	1.00	1.00
Incremental Delay, d2	101.6	42.2		81.6	45.0		71.6	2.2	0.1	42.7	54.3	0.1
Delay (s)	156.1	85.7		134.6	87.0		126.5	41.7	26.4	88.6	90.8	19.3
Level of Service	F	F		F	F		F	D	C	F	F	B
Approach Delay (s)		93.4			92.7			56.0			81.8	
Approach LOS		F			F			E			F	

Intersection Summary			
HCM Average Control Delay	85.0	HCM Level of Service	F
HCM Volume to Capacity ratio	1.09		
Actuated Cycle Length (s)	120.0	Sum of lost time (s)	16.0
Intersection Capacity Utilization	101.5%	ICU Level of Service	G
Analysis Period (min)	15		

c Critical Lane Group

Movement	EBL	EBT	EBR	WBL	WBT	WBR	NBL	NBT	NBR	SBL	SBT	SBR
Lane Configurations												
Ideal Flow (vphpl)	1900	1900	1900	1900	1900	1900	1900	1900	1900	1900	1900	1900
Total Lost time (s)		4.0		4.0	4.0			4.0		4.0	4.0	
Lane Util. Factor		1.00		0.95	0.95			0.95		1.00	0.95	
Frpb, ped/bikes		1.00		1.00	0.97			0.98		1.00	0.95	
Flpb, ped/bikes		0.99		1.00	1.00			1.00		1.00	1.00	
Frt		0.93		1.00	0.93			0.95		1.00	0.95	
Flt Protected		0.99		0.95	1.00			1.00		0.95	1.00	
Satd. Flow (prot)		1704		1681	1586			3275		1770	3208	
Flt Permitted		0.56		0.73	1.00			1.00		0.95	1.00	
Satd. Flow (perm)		963		1290	1586			3275		1770	3208	
Volume (vph)	10	10	20	126	120	120	0	1113	615	200	898	420
Peak-hour factor, PHF	0.95	0.95	0.95	0.95	0.95	0.95	0.95	0.95	0.95	0.95	0.95	0.95
Adj. Flow (vph)	11	11	21	133	126	126	0	1172	647	211	945	442
RTOR Reduction (vph)	0	20	0	0	38	0	0	67	0	0	48	0
Lane Group Flow (vph)	0	23	0	133	214	0	0	1752	0	211	1339	0
Confl. Peds. (#/hr)	36					36	48		16	16		48
Turn Type	Perm			Perm						Prot		
Protected Phases		7			8			2		1	6	
Permitted Phases	7			8								
Actuated Green, G (s)		4.0		16.5	16.5			52.0		9.5	66.0	
Effective Green, g (s)		4.5		17.0	17.0			52.5		10.0	66.5	
Actuated g/C Ratio		0.04		0.17	0.17			0.52		0.10	0.66	
Clearance Time (s)		4.5		4.5	4.5			4.5		4.5	4.5	
Vehicle Extension (s)		2.0		2.0	2.0			2.0		2.0	2.0	
Lane Grp Cap (vph)		43		219	270			1719		177	2133	
v/s Ratio Prot								c0.53		c0.12	0.42	
v/s Ratio Perm		c0.02		0.10	0.13							
v/c Ratio		0.53		0.61	0.79			1.02		1.19	0.63	
Uniform Delay, d1		46.7		38.4	39.8			23.8		45.0	9.6	
Progression Factor		1.00		1.00	1.00			0.61		1.00	1.00	
Incremental Delay, d2		6.2		3.2	13.7			12.1		128.8	1.4	
Delay (s)		53.0		41.7	53.5			26.5		173.8	11.0	
Level of Service		D		D	D			C		F	B	
Approach Delay (s)		53.0			49.4			26.5			32.5	
Approach LOS		D			D			C			C	

Intersection Summary				
HCM Average Control Delay	31.6	HCM Level of Service	C	
HCM Volume to Capacity ratio	0.97			
Actuated Cycle Length (s)	100.0	Sum of lost time (s)	16.0	
Intersection Capacity Utilization	89.4%	ICU Level of Service	E	
Analysis Period (min)	15			

c Critical Lane Group

Movement	EBL	EBT	EBR	WBL	WBT	WBR	NBL	NBT	NBR	SBL	SBT	SBR
Lane Configurations												
Ideal Flow (vphpl)	1900	1900	1900	1900	1900	1900	1900	1900	1900	1900	1900	1900
Total Lost time (s)	4.0	4.0		4.0	4.0		4.0	4.0		4.0	4.0	
Lane Util. Factor	0.97	0.95		1.00	0.95		1.00	0.95		1.00	0.95	
Frpb, ped/bikes	1.00	0.98		1.00	0.99		1.00	0.97		1.00	0.98	
Flpb, ped/bikes	1.00	1.00		1.00	1.00		1.00	1.00		1.00	1.00	
Frt	1.00	0.98		1.00	0.94		1.00	0.96		1.00	0.99	
Flt Protected	0.95	1.00		0.95	1.00		0.95	1.00		0.95	1.00	
Satd. Flow (prot)	3433	3418		1770	3299		1770	3280		1770	3416	
Flt Permitted	0.95	1.00		0.95	1.00		0.95	1.00		0.95	1.00	
Satd. Flow (perm)	3433	3418		1770	3299		1770	3280		1770	3416	
Volume (vph)	460	930	132	160	580	350	100	948	350	300	694	60
Peak-hour factor, PHF	0.95	0.95	0.95	0.95	0.95	0.95	0.95	0.95	0.95	0.95	0.95	0.95
Adj. Flow (vph)	484	979	139	168	611	368	105	998	368	316	731	63
RTOR Reduction (vph)	0	11	0	0	90	0	0	38	0	0	6	0
Lane Group Flow (vph)	484	1107	0	168	889	0	105	1328	0	316	788	0
Confl. Peds. (#/hr)	15		48	48		15	123		48	48		123
Turn Type	Prot			Prot			Prot			Prot		
Protected Phases	7	4		3	8		5	2		1	6	
Permitted Phases												
Actuated Green, G (s)	15.5	29.0		8.5	22.0		8.6	32.0		13.5	36.9	
Effective Green, g (s)	15.0	30.0		8.0	23.0		8.1	33.0		13.0	37.9	
Actuated g/C Ratio	0.15	0.30		0.08	0.23		0.08	0.33		0.13	0.38	
Clearance Time (s)	3.5	5.0		3.5	5.0		3.5	5.0		3.5	5.0	
Vehicle Extension (s)	2.0	2.0		2.0	2.0		2.0	2.0		2.0	2.0	
Lane Grp Cap (vph)	515	1025		142	759		143	1082		230	1295	
v/s Ratio Prot	c0.14	c0.32		c0.09	0.27		0.06	c0.41		c0.18	0.23	
v/s Ratio Perm												
v/c Ratio	0.94	1.08		1.18	1.17		0.73	1.23		1.37	0.61	
Uniform Delay, d1	42.1	35.0		46.0	38.5		44.9	33.5		43.5	25.1	
Progression Factor	1.00	1.00		1.00	1.00		1.00	1.00		1.21	0.73	
Incremental Delay, d2	24.9	52.2		133.1	90.8		15.4	110.8		188.4	1.7	
Delay (s)	66.9	87.2		179.1	129.3		60.3	144.3		241.2	20.1	
Level of Service	E	F		F	F		E	F		F	C	
Approach Delay (s)		81.1			136.6			138.3			83.0	
Approach LOS		F			F			F			F	

Intersection Summary				
HCM Average Control Delay	109.2	HCM Level of Service	F	
HCM Volume to Capacity ratio	1.14			
Actuated Cycle Length (s)	100.0	Sum of lost time (s)	12.0	
Intersection Capacity Utilization	109.3%	ICU Level of Service	H	
Analysis Period (min)	15			

c Critical Lane Group

Movement	EBL	EBT	EBR	WBL	WBT	WBR	NBL	NBT	NBR	SBL	SBT	SBR
Lane Configurations												
Ideal Flow (vphpl)	1900	1900	1900	1900	1900	1900	1900	1900	1900	1900	1900	1900
Total Lost time (s)	4.0	4.0		4.0	4.0			4.0			4.0	
Lane Util. Factor	1.00	0.95		1.00	0.95			0.95			0.95	
Frpb, ped/bikes	1.00	0.99		1.00	1.00			1.00			1.00	
Flpb, ped/bikes	1.00	1.00		0.99	1.00			1.00			1.00	
Frt	1.00	0.99		1.00	0.99			0.98			0.97	
Flt Protected	0.95	1.00		0.95	1.00			0.99			0.99	
Satd. Flow (prot)	1762	3458		1752	3500			3431			3390	
Flt Permitted	0.21	1.00		0.16	1.00			0.83			0.85	
Satd. Flow (perm)	394	3458		291	3500			2874			2908	
Volume (vph)	60	1156	120	69	1018	63	90	331	57	33	160	50
Peak-hour factor, PHF	0.99	0.99	0.99	0.99	0.99	0.99	0.99	0.99	0.99	0.99	0.99	0.99
Adj. Flow (vph)	61	1168	121	70	1028	64	91	334	58	33	162	51
RTOR Reduction (vph)	0	10	0	0	6	0	0	13	0	0	30	0
Lane Group Flow (vph)	61	1279	0	70	1086	0	0	470	0	0	217	0
Confl. Peds. (#/hr)	24		78	78		24	8		6	6		8
Turn Type	Perm			Perm			Perm			Perm		
Protected Phases		4			8			2			6	
Permitted Phases	4			8			2			6		
Actuated Green, G (s)	50.0	50.0		50.0	50.0			20.0			20.0	
Effective Green, g (s)	51.0	51.0		51.0	51.0			21.0			21.0	
Actuated g/C Ratio	0.64	0.64		0.64	0.64			0.26			0.26	
Clearance Time (s)	5.0	5.0		5.0	5.0			5.0			5.0	
Lane Grp Cap (vph)	251	2204		186	2231			754			763	
v/s Ratio Prot		c0.37			0.31							
v/s Ratio Perm	0.15			0.24				c0.16			0.07	
v/c Ratio	0.24	0.58		0.38	0.49			0.62			0.28	
Uniform Delay, d1	6.2	8.3		6.9	7.6			26.0			23.5	
Progression Factor	0.55	0.44		0.38	0.25			0.73			1.00	
Incremental Delay, d2	0.9	0.4		3.3	0.4			2.0			0.9	
Delay (s)	4.3	4.1		5.9	2.4			21.1			24.4	
Level of Service	A	A		A	A			C			C	
Approach Delay (s)		4.1			2.6			21.1			24.4	
Approach LOS		A			A			C			C	

Intersection Summary			
HCM Average Control Delay	7.6	HCM Level of Service	A
HCM Volume to Capacity ratio	0.59		
Actuated Cycle Length (s)	80.0	Sum of lost time (s)	8.0
Intersection Capacity Utilization	80.4%	ICU Level of Service	D
Analysis Period (min)	15		
c Critical Lane Group			

Movement	EBL	EBT	EBR	WBL	WBT	WBR	NBL	NBT	NBR	SBL	SBT	SBR
Lane Configurations												
Ideal Flow (vphpl)	1900	1900	1900	1900	1900	1900	1900	1900	1900	1900	1900	1900
Total Lost time (s)	4.0	4.0		4.0	4.0		4.0	4.0		4.0	4.0	
Lane Util. Factor	1.00	0.95		1.00	0.95		1.00	0.95		1.00	0.95	
Frpb, ped/bikes	1.00	0.98		1.00	0.96		1.00	0.99		1.00	0.95	
Flpb, ped/bikes	1.00	1.00		1.00	1.00		1.00	1.00		1.00	1.00	
Frt	1.00	0.98		1.00	0.98		1.00	0.99		1.00	0.96	
Flt Protected	0.95	1.00		0.95	1.00		0.95	1.00		0.95	1.00	
Satd. Flow (prot)	1770	3429		1766	3303		1770	3466		1770	3243	
Flt Permitted	0.15	1.00		0.17	1.00		0.12	1.00		0.13	1.00	
Satd. Flow (perm)	274	3429		320	3303		220	3466		250	3243	
Volume (vph)	249	914	109	74	558	110	466	1448	124	130	693	255
Peak-hour factor, PHF	0.98	0.98	0.98	0.98	0.98	0.98	0.98	0.98	0.98	0.98	0.98	0.98
Adj. Flow (vph)	254	933	111	76	569	112	476	1478	127	133	707	260
RTOR Reduction (vph)	0	8	0	0	16	0	0	6	0	0	36	0
Lane Group Flow (vph)	254	1036	0	76	665	0	476	1599	0	133	931	0
Confl. Peds. (#/hr)	94		86	86		94			40			111
Turn Type	pm pt			pm pt			pm pt			pm pt		
Protected Phases	7	4		3	8		5	2		1	6	
Permitted Phases	4			8			2			6		
Actuated Green, G (s)	39.2	32.1		26.8	23.2		57.8	47.8		35.8	29.8	
Effective Green, g (s)	39.2	32.1		26.3	23.2		57.8	47.8		35.8	29.8	
Actuated g/C Ratio	0.37	0.31		0.25	0.22		0.55	0.46		0.34	0.28	
Clearance Time (s)	3.5	4.0		3.5	4.0		4.0	4.0		4.0	4.0	
Vehicle Extension (s)	3.0	2.0		3.0	2.0		2.0	2.0		2.0	2.0	
Lane Grp Cap (vph)	273	1048		123	730		475	1578		172	920	
v/s Ratio Prot	c0.11	c0.30		0.02	0.20		c0.23	c0.46		0.04	0.29	
v/s Ratio Perm	0.24			0.14			0.32			0.22		
v/c Ratio	0.93	0.99		0.62	0.91		1.00	1.01		0.77	1.01	
Uniform Delay, d1	26.6	36.3		34.5	39.9		31.3	28.6		28.6	37.6	
Progression Factor	0.97	0.76		1.00	1.00		1.22	0.66		1.00	1.00	
Incremental Delay, d2	31.9	22.1		8.9	15.4		33.4	21.4		17.6	32.7	
Delay (s)	57.6	49.7		43.4	55.3		71.7	40.3		46.3	70.3	
Level of Service	E	D		D	E		E	D		D	E	
Approach Delay (s)		51.2			54.1			47.5			67.4	
Approach LOS		D			D			D			E	

Intersection Summary			
HCM Average Control Delay	53.5	HCM Level of Service	D
HCM Volume to Capacity ratio	0.97		
Actuated Cycle Length (s)	105.0	Sum of lost time (s)	8.0
Intersection Capacity Utilization	101.8%	ICU Level of Service	G
Analysis Period (min)	15		
c Critical Lane Group			

Movement	EBL	EBT	EBR	WBL	WBT	WBR	NBL	NBT	NBR	SBL	SBT	SBR
Lane Configurations												
Ideal Flow (vphpl)	1900	1900	1900	1900	1900	1900	1900	1900	1900	1900	1900	1900
Total Lost time (s)		4.0		4.0	4.0		4.0	4.0		4.0	4.0	
Lane Util. Factor		0.91		1.00	0.95		1.00	1.00		1.00	1.00	
Frpb, ped/bikes		1.00		1.00	1.00		1.00	1.00		1.00	0.99	
Flpb, ped/bikes		1.00		1.00	1.00		0.98	1.00		1.00	1.00	
Frt		0.99		1.00	0.98		1.00	0.97		1.00	0.98	
Flt Protected		0.99		0.95	1.00		0.95	1.00		0.95	1.00	
Satd. Flow (prot)		5013		1768	3451		1737	1802		1770	1804	
Flt Permitted		0.65		0.21	1.00		0.25	1.00		0.12	1.00	
Satd. Flow (perm)		3298		392	3451		460	1802		219	1804	
Volume (vph)	160	860	40	91	1340	221	190	525	120	80	403	70
Peak-hour factor, PHF	0.98	0.98	0.98	0.98	0.98	0.98	0.98	0.98	0.98	0.98	0.98	0.98
Adj. Flow (vph)	163	878	41	93	1367	226	194	536	122	82	411	71
RTOR Reduction (vph)	0	5	0	0	15	0	0	9	0	0	7	0
Lane Group Flow (vph)	0	1077	0	93	1578	0	194	649	0	82	475	0
Confl. Peds. (#/hr)	24		4	4		24	48		12	12		48
Turn Type	Perm			Perm			Perm			Perm		
Protected Phases		4			8			2			6	
Permitted Phases	4			8			2			6		
Actuated Green, G (s)		47.0		47.0	47.0		33.0	33.0		33.0	33.0	
Effective Green, g (s)		48.0		48.0	48.0		34.0	34.0		34.0	34.0	
Actuated g/C Ratio		0.53		0.53	0.53		0.38	0.38		0.38	0.38	
Clearance Time (s)		5.0		5.0	5.0		5.0	5.0		5.0	5.0	
Lane Grp Cap (vph)		1759		209	1841		174	681		83	682	
v/s Ratio Prot					c0.46			0.36			0.26	
v/s Ratio Perm		0.33		0.24			c0.42			0.37		
v/c Ratio		1.87dl		0.44	0.86		1.11	0.95		0.99	0.70	
Uniform Delay, d1		14.6		12.8	18.1		28.0	27.2		27.8	23.6	
Progression Factor		1.00		1.00	1.00		1.00	1.00		1.00	1.00	
Incremental Delay, d2		1.6		6.7	5.4		102.4	24.6		95.5	5.8	
Delay (s)		16.2		19.6	23.5		130.4	51.8		123.3	29.5	
Level of Service		B		B	C		F	D		F	C	
Approach Delay (s)		16.2			23.3			69.7			43.1	
Approach LOS		B			C			E			D	

Intersection Summary			
HCM Average Control Delay	33.6	HCM Level of Service	C
HCM Volume to Capacity ratio	0.96		
Actuated Cycle Length (s)	90.0	Sum of lost time (s)	8.0
Intersection Capacity Utilization	135.7%	ICU Level of Service	H
Analysis Period (min)	15		

dl Defacto Left Lane. Recode with 1 though lane as a left lane.
c Critical Lane Group

APPENDIX I:
CMA ANALYSIS CALCULATIONS

Appendix I - 1
MTS Roadway System Analysis Summary - 2015 AM

Link Location	Segment Limits		# Lanes	No Project Volume	Project Volume	With Project Volume	% Increase	V/C Ratio - No Project	V/C Ratio - With Project	No Project LOS	With Project LOS	Change in V/C >3%	Change in LOS
Freeway Segments													
I-80													
Between	I-580	Powell Street	5	5,955	10	5,965	0%	0.60	0.60	C	C	No	no change
Between	Powell Street	I-580	5	9,404	4	9,408	0%	0.94	0.94	E	E	No	no change
I-880													
Between	Madison St	5th Ave	4	6,322	0	6,322	0%	0.79	0.79	D	D	No	no change
Between	5th Ave	Madison St	4	7,157	0	7,157	0%	0.89	0.89	D	D	No	no change
I-980													
Between	I-880	Grand Ave	3	2,733	4	2,737	0%	0.46	0.46	B	B	No	no change
Between	Grand Ave.	SR 24 @ 580	5	2,816	4	2,820	0%	0.28	0.28	A	A	No	no change
Between	SR 24 @ 580	Grand Ave	5	5,272	7	5,279	0%	0.53	0.53	B	B	No	no change
Between	Grand Ave	I-880	3	4,439	7	4,446	0%	0.74	0.74	C	C	No	no change
I-580													
Between	I-80	SR 24	5	5,481	2	5,483	0%	0.55	0.55	B	B	No	no change
Between	SR 24	Oakland Ave	5	5,098	20	5,118	0%	0.51	0.51	B	B	No	no change
Between	Oakland Ave	SR 24	5	8,412	6	8,418	0%	0.84	0.84	D	D	No	no change
Between	SR 24	I-80	5	8,864	12	8,876	0%	0.89	0.89	D	D	No	no change
SR 24													
Between	I-580 Ramps	Caldecott Tunnel	4	2,666	11	2,677	0%	0.33	0.33	A	A	No	no change
Between	Caldecott Tunnel	I-580 Ramps	4	7,568	5	7,573	0%	0.95	0.95	E	E	No	no change
Arterials													
Martin Luther King Jr. Way													
Between	I-580	MacArthur Blvd	2	14	7	21	50%	0.01	0.01	A	A	No	no change
Between	MacArthur Blvd	40th Street	2	1	12	13	1200%	0	0.01	A	A	No	no change
Between	40th Street	45th Street	2	9	32	41	356%	0.01	0.03	A	A	No	no change
Between	45th Street	40th Street	2	52	5	57	10%	0.03	0.04	A	A	No	no change
Between	40th Street	MacArthur Blvd	2	-	9	9	0%	0	0.01	A	A	No	no change
Between	MacArthur Blvd	I-580	2	8	6	14	75%	0.01	0.01	A	A	No	no change
Telegraph Ave													
Between	I-580	MacArthur Blvd	2	116	25	141	22%	0.07	0.09	A	A	No	no change
Between	MacArthur Blvd	40th Street	2	440	35	475	8%	0.28	0.3	A	A	No	no change
Between	40th Street	45th Street	2	466	35	501	8%	0.29	0.31	A	A	No	no change
Between	45th Street	51st Street	2	325	33	358	10%	0.2	0.22	A	A	No	no change
Between	51st Street	SR 24	2	1,419	18	1,437	1%	0.89	0.9	D	D	No	no change
Between	SR 24	51st Street	2	1,626	6	1,632	0%	1.02	1.02	F	F	No	no change
Between	51st Street	45th Street	2	1,116	25	1,141	2%	0.7	0.71	C	C	No	no change
Between	45th Street	40th Street	2	1,592	28	1,620	2%	1.00	1.01	F	F	No	no change
Between	40th Street	MacArthur Blvd	2	1,076	32	1,108	3%	0.67	0.69	C	C	No	no change
Between	MacArthur Blvd	I-580	2	790	36	826	5%	0.49	0.52	B	B	No	no change
Adeline Street													
Between	San Pablo Avenue	Stanford Avene	2	93	0	93	0%	0.06	0.06	A	A	No	no change
Between	Stanford Avene	San Pablo Avenue	2	386	0	386	0%	0.24	0.24	A	A	No	no change
Shattuck Avenue													
Between	Telegraph Avenue	52nd Street	2	126	6	132	5%	0.08	0.08	A	A	No	no change
Between	52nd Street	Alcatraz Avenue	1	727	6	733	1%	0.91	0.92	E	E	No	no change
Between	Alcatraz Avenue	52nd Street	1	884	5	889	1%	1.11	1.11	F	F	No	no change
Between	52nd Street	Telegraph Avenue	2	436	11	447	3%	0.27	0.28	A	A	No	no change
West MacArhtur Blvd.													
Between	San Pablo Avenue	MLK Jr. Way	3	701	13	714	2%	0.29	0.3	A	A	No	no change
Between	MLK Jr. Way	Telegraph Avenue	3	707	8	715	1%	0.29	0.3	A	A	No	no change
Between	Telegraph Avenue	Broadway	3	1,079	12	1,091	1%	0.45	0.45	B	B	No	no change
Between	Broadway	Telegraph Avenue	3	938	6	944	1%	0.39	0.39	B	B	No	no change
Between	Telegraph Avenue	MLK Jr. Way	3	554	21	575	4%	0.23	0.24	A	A	No	no change
Between	MLK Jr. Way	San Pablo Avenue	3	572	18	590	3%	0.24	0.25	A	A	No	no change
51st Street													
Between	Telegraph Avenue	Broadway	2	607	0	607	0%	0.38	0.38	B	B	No	no change
Between	Broadway	Telegraph Avenue	2	1,045	0	1,045	0%	0.65	0.65	C	C	No	no change
Claremont Avenue													
Between	Telegraph Avenue	College Avenue	2	913	6	919	1%	0.57	0.57	B	B	No	no change
Between	College Avenue	Telegraph Avenue	2	1,333	4	1,337	0%	0.83	0.84	D	D	No	no change

Fehr & Peers, 2007.

Appendix I - 2
MTS Roadway System Analysis Summary - 2015 PM

Link Location	Segment Limits		# Lanes	No Project Volume	Project Volume	With Project Volume	% Increase	V/C Ratio - No Project	V/C Ratio - With Project	No Project LOS	With Project LOS	Change in V/C >3%	Change in LOS
Freeway Segments													
I-80													
Between	I-580	Powell Street	5	8,575	6	8,581	0%	0.86	0.86	D	D	No	no change
Between	Powell Street	I-580	5	6,724	9	6,733	0%	0.67	0.67	C	C	No	no change
I-880													
Between	Madison St	5th Ave	4	7,417	0	7,417	0%	0.93	0.93	E	E	No	no change
Between	5th Ave	Madison St	4	6,544	0	6,544	0%	0.82	0.82	D	D	No	no change
I-980													
Between	I-880	Grand Ave	3	3,914	7	3,921	0%	0.65	0.65	C	C	No	no change
Between	Grand Ave.	SR 24 @ 580	5	5,674	7	5,681	0%	0.57	0.57	B	B	No	no change
Between	SR 24 @ 580	Grand Ave	5	2,653	5	2,658	0%	0.27	0.27	A	A	No	no change
Between	Grand Ave	I-880	3	2,557	5	2,562	0%	0.43	0.43	B	B	No	no change
I-580													
Between	I-80	SR 24	5	8,127	6	8,133	0%	0.81	0.81	D	D	No	no change
Between	SR 24	Oakland Ave	4.5	8,599	13	8,612	0%	0.96	0.96	E	E	No	no change
Between	Oakland Ave	SR 24	4.5	6,161	19	6,180	0%	0.68	0.69	C	C	No	no change
Between	SR 24	I-80	5	6,366	7	6,373	0%	0.64	0.64	C	C	No	no change
SR 24													
Between	I-580 Ramps	Caldecott Tunnel	4	8,254	7	8,261	0%	1.03	1.03	F	F	No	no change
Between	Caldecott Tunnel	I-580 Ramps	4	3,124	11	3,135	0%	0.39	0.39	B	B	No	no change
Arterials													
Martin Luther King Jr. Way													
Between	I-580	MacArthur Blvd	2	12	0	12	0%	0.01	0.01	A	A	No	no change
Between	MacArthur Blvd	40th Street	2	1	20	21	2000%	0	0.01	A	A	No	no change
Between	40th Street	45th Street	2	9	22	31	244%	0.01	0.02	A	A	No	no change
Between	45th Street	40th Street	2	13	7	20	54%	0.01	0.01	A	A	No	no change
Between	40th Street	MacArthur Blvd	2	-	5	5	0%	0	0	A	A	No	no change
Between	MacArthur Blvd	I-580	2	11	7	18	64%	0.01	0.01	A	A	No	no change
Telegraph Ave													
Between	I-580	MacArthur Blvd	2	628	38	666	6%	0.39	0.42	B	B	No	no change
Between	MacArthur Blvd	40th Street	2	1,140	27	1,167	2%	0.71	0.73	C	C	No	no change
Between	40th Street	45th Street	2	1,529	27	1,556	2%	0.96	0.97	E	E	No	no change
Between	45th Street	51st Street	2	1,115	18	1,133	2%	0.7	0.71	C	C	No	no change
Between	51st Street	SR 24	2	1,857	9	1,866	0%	1.16	1.17	F	F	No	no change
Between	SR 24	51st Street	2	1,202	18	1,220	1%	0.75	0.76	C	D	No	change
Between	51st Street	45th Street	2	366	26	392	7%	0.23	0.25	A	A	No	no change
Between	45th Street	40th Street	2	507	48	555	9%	0.32	0.35	A	B	No	change
Between	40th Street	MacArthur Blvd	2	502	51	553	10%	0.31	0.35	A	B	Yes	change
Between	MacArthur Blvd	I-580	2	213	29	242	14%	0.13	0.15	A	A	No	no change
Adeline Street													
Between	San Pablo Avenue	Stanford Avene	2	453	0	453	0%	0.28	0.28	A	A	No	no change
Between	Stanford Avene	San Pablo Avenue	2	99	0	99	0%	0.06	0.06	A	A	No	no change
Shattuck Avenue													
Between	Telegraph Avenue	52nd Street	2	332	7	339	2%	0.21	0.21	A	A	No	no change
Between	52nd Street	Alcatraz Avenue	1	878	7	885	1%	1.1	1.11	F	F	No	no change
Between	Alcatraz Avenue	52nd Street	1	887	6	893	1%	1.11	1.12	F	F	No	no change
Between	52nd Street	Telegraph Avenue	2	98	20	118	20%	0.06	0.07	A	A	No	no change
West MacArhtur Blvd.													
Between	San Pablo Avenue	MLK Jr. Way	3	1,065	20	1,085	2%	0.44	0.45	B	B	No	no change
Between	MLK Jr. Way	Telegraph Avenue	3	1,041	17	1,058	2%	0.43	0.44	B	B	No	no change
Between	Telegraph Avenue	Broadway	3	1,398	7	1,405	1%	0.58	0.59	B	C	No	change
Between	Broadway	Telegraph Avenue	3	1,519	7	1,526	0%	0.63	0.64	C	C	No	no change
Between	Telegraph Avenue	MLK Jr. Way	3	904	16	920	2%	0.38	0.38	B	B	No	no change
Between	MLK Jr. Way	San Pablo Avenue	3	897	12	909	1%	0.37	0.38	B	B	No	no change
51st Street													
Between	Telegraph Avenue	Broadway	2	1,126	0	1,126	0%	0.7	0.7	C	C	No	no change
Between	Broadway	Telegraph Avenue	2	1,009	0	1,009	0%	0.63	0.63	C	C	No	no change
Claremont Avenue													
Between	Telegraph Avenue	College Avenue	2	1,368	5	1,373	0%	0.86	0.86	D	D	No	no change
Between	College Avenue	Telegraph Avenue	2	1,168	9	1,177	1%	0.73	0.74	C	C	No	no change

Fehr & Peers, 2007.

Appendix I - 3
MTS Roadway System Analysis Summary - 2030 AM

Link Location	Segment Limits		# Lanes	No Project Volume	Project Volume	With Project Volume	% Increase	V/C Ratio - No Project	V/C Ratio - With Project	No Project LOS	With Project LOS	Change in V/C >3%	Change in LOS
Freeway Segments													
I-80													
Between	I-580	Powell Street	5	6,523	10	6,533	0%	0.65	0.65	C	C	No	no change
Between	Powell Street	I-580	5	12,514	4	12,518	0%	1.25	1.25	F	F	No	no change
I-880													
Between	Madison St	5th Ave	4	7,221	0	7,221	0%	0.90	0.90	D	D	No	no change
Between	5th Ave	Madison St	4	7,903	0	7,903	0%	0.99	0.99	E	E	No	no change
I-980													
Between	I-880	Grand Ave	3	2,864	4	2,868	0%	0.48	0.48	B	B	No	no change
Between	Grand Ave.	SR 24 @ 580	5	3,037	4	3,041	0%	0.30	0.30	A	A	No	no change
Between	SR 24 @ 580	Grand Ave	5	6,284	7	6,291	0%	0.63	0.63	C	C	No	no change
Between	Grand Ave	I-880	3	4,706	7	4,713	0%	0.78	0.79	D	D	No	no change
I-580													
Between	I-80	SR 24	5	6,091	2	6,093	0%	0.61	0.61	C	C	No	no change
Between	SR 24	Oakland Ave	4.5	6,131	20	6,151	0%	0.68	0.68	C	C	No	no change
Between	Oakland Ave	SR 24	4.5	8,712	6	8,718	0%	0.97	0.97	E	E	No	no change
Between	SR 24	I-80	5	9,211	12	9,223	0%	0.92	0.92	E	E	No	no change
SR 24													
Between	I-580 Ramps	Caldecott Tunnel	4	3,508	11	3,519	0%	0.44	0.44	B	B	No	no change
Between	Caldecott Tunnel	I-580 Ramps	4	9,465	5	9,470	0%	1.18	1.18	F	F	No	no change
Arterials													
Martin Luther King Jr. Way													
Between	I-580	MacArthur Blvd	2	14	7	21	50%	0.01	0.01	A	A	No	no change
Between	MacArthur Blvd	40th Street	2	1	12	13	1200%	0	0.01	A	A	No	no change
Between	40th Street	45th Street	2	18	32	50	178%	0.01	0.03	A	A	No	no change
Between	45th Street	40th Street	2	175	5	180	3%	0.11	0.11	A	A	No	no change
Between	40th Street	MacArthur Blvd	2	138	9	147	7%	0.09	0.09	A	A	No	no change
Between	MacArthur Blvd	I-580	2	14	6	20	43%	0.01	0.01	A	A	No	no change
Telegraph Ave													
Between	I-580	MacArthur Blvd	2	253	25	278	10%	0.16	0.17	A	A	No	no change
Between	MacArthur Blvd	40th Street	2	596	35	631	6%	0.37	0.39	B	B	No	no change
Between	40th Street	45th Street	2	586	35	621	6%	0.37	0.39	B	B	No	no change
Between	45th Street	51st Street	2	441	33	474	7%	0.28	0.3	A	A	No	no change
Between	51st Street	SR 24	2	1,764	18	1,782	1%	1.1	1.11	F	F	No	no change
Between	SR 24	51st Street	2	2,044	6	2,050	0%	1.28	1.28	F	F	No	no change
Between	51st Street	45th Street	2	1,669	25	1,694	1%	1.04	1.06	F	F	No	no change
Between	45th Street	40th Street	2	2,011	28	2,039	1%	1.26	1.27	F	F	No	no change
Between	40th Street	MacArthur Blvd	2	1,780	32	1,812	2%	1.11	1.13	F	F	No	no change
Between	MacArthur Blvd	I-580	2	1,445	36	1,481	2%	0.9	0.93	D	E	No	change
Adeline Street													
Between	San Pablo Avenue	Stanford Avene	2	125	0	125	0%	0.08	0.08	A	A	No	no change
Between	Stanford Avene	San Pablo Avenue	2	1,086	0	1,086	0%	0.68	0.68	C	C	No	no change
Shattuck Avenue													
Between	Telegraph Avenue	52nd Street	2	120	6	126	5%	0.08	0.08	A	A	No	no change
Between	52nd Street	Alcatraz Avenue	1	811	6	817	1%	1.01	1.02	F	F	No	no change
Between	Alcatraz Avenue	52nd Street	1	1,172	5	1,177	0%	1.47	1.47	F	F	No	no change
Between	52nd Street	Telegraph Avenue	2	304	11	315	4%	0.19	0.2	A	A	No	no change
West MacArhtur Blvd.													
Between	San Pablo Avenue	MLK Jr. Way	3	930	13	943	1%	0.39	0.39	B	B	No	no change
Between	MLK Jr. Way	Telegraph Avenue	3	1,058	8	1,066	1%	0.44	0.44	B	B	No	no change
Between	Telegraph Avenue	Broadway	3	1,514	12	1,526	1%	0.63	0.64	C	C	No	no change
Between	Broadway	Telegraph Avenue	3	1,741	6	1,747	0%	0.73	0.73	C	C	No	no change
Between	Telegraph Avenue	MLK Jr. Way	3	1,401	21	1,422	1%	0.58	0.59	B	C	No	change
Between	MLK Jr. Way	San Pablo Avenue	3	1,435	18	1,453	1%	0.6	0.61	C	C	No	no change
51st Street													
Between	Telegraph Avenue	Broadway	2	1,269	0	1,269	0%	0.79	0.79	D	D	No	no change
Between	Broadway	Telegraph Avenue	2	1,070	0	1,070	0%	0.67	0.67	C	C	No	no change
Claremont Avenue													
Between	Telegraph Avenue	College Avenue	2	1,272	6	1,278	0%	0.8	0.8	D	D	No	no change
Between	College Avenue	Telegraph Avenue	2	1,735	4	1,739	0%	1.08	1.09	F	F	No	no change

Fehr & Peers, 2007.

Appendix I - 4
MTS Roadway System Analysis Summary - 2030 PM

Link Location	Segment Limits		# Lanes	No Project Volume	Project Volume	With Project Volume	% Increase	V/C Ratio - No Project	V/C Ratio - With Project	No Project LOS	With Project LOS	Change in V/C >3%	Change in LOS
Freeway Segments													
I-80													
Between	I-580	Powell Street	5	9,870	6	9,876	0%	0.99	0.99	E	E	No	no change
Between	Powell Street	I-580	5	6,668	9	6,677	0%	0.67	0.67	C	C	No	no change
I-880													
Between	Madison St	5th Ave	4	7,953	0	7,953	0%	0.99	0.99	E	E	No	no change
Between	5th Ave	Madison St	4	7,281	0	7,281	0%	0.91	0.91	E	E	No	no change
I-980													
Between	I-880	Grand Ave	3	3,744	7	3,751	0%	0.62	0.63	C	C	No	no change
Between	Grand Ave.	SR 24 @ 580	5	6,341	7	6,348	0%	0.63	0.63	C	C	No	no change
Between	SR 24 @ 580	Grand Ave	5	3,030	5	3,035	0%	0.30	0.30	A	A	No	no change
Between	Grand Ave	I-880	3	2,892	5	2,897	0%	0.48	0.48	B	B	No	no change
I-580													
Between	I-80	SR 24	5	9,078	6	9,084	0%	0.91	0.91	E	E	No	no change
Between	SR 24	Oakland Ave	4.5	8,973	13	8,986	0%	1.00	1.00	F	F	No	no change
Between	Oakland Ave	SR 24	4.5	6,328	19	6,347	0%	0.70	0.71	C	C	No	no change
Between	SR 24	I-80	5	6,871	7	6,878	0%	0.69	0.69	C	C	No	no change
SR 24													
Between	I-580 Ramps	Caldecott Tunnel	4	9,881	7	9,888	0%	1.24	1.24	F	F	No	no change
Between	Caldecott Tunnel	I-580 Ramps	4	3,991	11	4,002	0%	0.50	0.50	B	B	No	no change
Arterials													
Martin Luther King Jr. Way													
Between	I-580	MacArthur Blvd	2	16	0	16	0%	0.01	0.01	A	A	No	no change
Between	MacArthur Blvd	40th Street	2	11	20	31	182%	0.01	0.02	A	A	No	no change
Between	40th Street	45th Street	2	74	22	96	30%	0.05	0.06	A	A	No	no change
Between	45th Street	40th Street	2	25	7	32	28%	0.02	0.02	A	A	No	no change
Between	40th Street	MacArthur Blvd	2	1	5	6	500%	0	0	A	A	No	no change
Between	MacArthur Blvd	I-580	2	14	7	21	50%	0.01	0.01	A	A	No	no change
Telegraph Ave													
Between	I-580	MacArthur Blvd	2	1,446	38	1,484	3%	0.9	0.93	D	E	No	change
Between	MacArthur Blvd	40th Street	2	2,013	27	2,040	1%	1.26	1.28	F	F	No	no change
Between	40th Street	45th Street	2	2,082	27	2,109	1%	1.3	1.32	F	F	No	no change
Between	45th Street	51st Street	2	1,646	18	1,664	1%	1.03	1.04	F	F	No	no change
Between	51st Street	SR 24	2	2,202	9	2,211	0%	1.38	1.38	F	F	No	no change
Between	SR 24	51st Street	2	1,376	18	1,394	1%	0.86	0.87	D	D	No	no change
Between	51st Street	45th Street	2	578	26	604	4%	0.36	0.38	B	B	No	no change
Between	45th Street	40th Street	2	742	48	790	6%	0.46	0.49	B	B	No	no change
Between	40th Street	MacArthur Blvd	2	815	51	866	6%	0.51	0.54	B	B	No	no change
Between	MacArthur Blvd	I-580	2	328	29	357	9%	0.21	0.22	A	A	No	no change
Adeline Street													
Between	San Pablo Avenue	Stanford Avene	2	1,088	0	1,088	0%	0.68	0.68	C	C	No	no change
Between	Stanford Avene	San Pablo Avenue	2	247	0	247	0%	0.15	0.15	A	A	No	no change
Shattuck Avenue													
Between	Telegraph Avenue	52nd Street	2	357	7	364	2%	0.22	0.23	A	A	No	no change
Between	52nd Street	Alcatraz Avenue	1	1,018	7	1,025	1%	1.27	1.28	F	F	No	no change
Between	Alcatraz Avenue	52nd Street	1	896	6	902	1%	1.12	1.13	F	F	No	no change
Between	52nd Street	Telegraph Avenue	2	107	20	127	19%	0.07	0.08	A	A	No	no change
West MacArhtur Blvd.													
Between	San Pablo Avenue	MLK Jr. Way	3	1,313	20	1,333	2%	0.55	0.56	B	B	No	no change
Between	MLK Jr. Way	Telegraph Avenue	3	1,287	17	1,304	1%	0.54	0.54	B	B	No	no change
Between	Telegraph Avenue	Broadway	3	1,656	7	1,663	0%	0.69	0.69	C	C	No	no change
Between	Broadway	Telegraph Avenue	3	2,196	7	2,203	0%	0.92	0.92	E	E	No	no change
Between	Telegraph Avenue	MLK Jr. Way	3	1,716	16	1,732	1%	0.72	0.72	C	C	No	no change
Between	MLK Jr. Way	San Pablo Avenue	3	1,718	12	1,730	1%	0.72	0.72	C	C	No	no change
51st Street													
Between	Telegraph Avenue	Broadway	2	1,136	0	1,136	0%	0.71	0.71	C	C	No	no change
Between	Broadway	Telegraph Avenue	2	1,171	0	1,171	0%	0.73	0.73	C	C	No	no change
Claremont Avenue													
Between	Telegraph Avenue	College Avenue	2	1,849	5	1,854	0%	1.16	1.16	F	F	No	no change
Between	College Avenue	Telegraph Avenue	2	1,491	9	1,500	1%	0.93	0.94	E	E	No	no change

Fehr & Peers, 2007.

APPENDIX J:
TELEGRAPH AVENUE BUS RAPID TRANSIT ANALYSIS

APPENDIX J TELEGRAPH AVENUE BUS RAPID TRANSIT

In May of 2007, AC Transit published a Draft Environmental Impact Statement / Environmental Impact Report (EIS/EIR) to implement Bus Rapid Transit (BRT) on Telegraph Avenue and International Boulevard connecting Berkeley, Oakland, and San Leandro. The proposed system would dedicate one travel lane in each direction to bus operations only, allowing buses to provide a quicker and more reliable service than regular bus service today. In the vicinity of the project, the proposed BRT project would generally eliminate one through lane in each direction and narrow Telegraph Avenue to one through lane in each direction.

Currently, there are no finalized design plans, an assurance of full funding for the BRT project, or approvals from AC Transit, the City of Oakland and other public agencies. Although proposed (but not approved) transit improvements are not typically considered as part of the projected baseline conditions, this EIR nevertheless (conservatively) provides a non-CEQA discussion of the potential effects on project impacts caused by proposed modifications to the traffic circulation network by the proposed BRT.

On Telegraph Avenue, within the study area, the BRT project would eliminate one northbound and one southbound travel lanes on Telegraph Avenue. This configuration would result in a single travel lane in northbound and southbound directions on Telegraph Avenue. In addition, the BRT project would eliminate left-turn lanes and prohibit left-turns at most intersections along its route. Left-turns would be allowed at the following locations along Telegraph Avenue within the study area: 51st Street (southbound only), 52st Street (southbound only), 40th Street, MacArthur Boulevard, and 27th Street. The BRT project would include new traffic signals and improvements to existing traffic signals (interconnection) to improve traffic flow.

By eliminating one travel lane in each direction, the BRT project would reduce the vehicular capacity on Telegraph Avenue. As previously shown in the project analysis, many of the study intersections on Telegraph Avenue would operate at poor levels of service under Cumulative Year 2030 Baseline Plus Project conditions. Thus, it is likely that the increased vehicular congestion on Telegraph Avenue would result in some vehicles diverting to other north-south arterials, such as Martin Luther King Jr. Way and Broadway.

Traffic operations Analysis

This section analyzes the effects of implementing the Telegraph Avenue BRT project on both Telegraph Avenue and on parallel roadways. The intersection LOS operations compares intersection LOS under Cumulative Year 2030 Baseline Plus Project (i.e., MacArthur Transit Village) conditions as previously presented in Chapter IV.C with intersection LOS under Cumulative Year 2030 Baseline Plus Project Plus BRT conditions. The Cumulative Year 2030 Baseline Plus Project Plus BRT conditions was developed by adjusting the Cumulative Year 2030 Baseline plus Project Condition of the MacArthur Transit Village EIR to account for geometric and volume changes related to the BRT project. These adjustments were based on the traffic

analysis completed for the BRT EIR.[1] Thus, this analysis is limited to the following intersections only, which are analyzed in both EIRs:

#2 Telegraph Avenue/52nd Street/Claremont Avenue (a.m. peak hour only)

#3 Telegraph Avenue/51st Street (a.m. peak hour only)

#6 Telegraph Avenue/45th Street (p.m. peak hour only)

#13 Telegraph Avenue/40th Street (a.m. and p.m. peak hours)

#18 Martin Luther King Jr. Way/MacArthur Boulevard (p.m. peak hour only)

#20 Telegraph Avenue/West MacArthur Boulevard (p.m. peak hour only)

#24 Telegraph Avenue/27th Street (p.m. peak hour only)

Based on the traffic volumes developed for the BRT EIR, the BRT project would reduce peak hour traffic volumes on Telegraph Avenue by about 250 vehicles in each direction. However, the BRT EIR does not provide traffic volumes on all parallel roadways that diverted traffic would use.

Table 1 summarizes intersection LOS for seven intersections under both Cumulative Year 2030 Baseline Plus Project No BRT (i.e., the Cumulative Year 2030 Baseline Plus Project conditions analyzed in the MacArthur Transit Village Project EIR) and Cumulative Year 2030 Baseline Plus Project Plus BRT conditions. Table 1 shows intersection LOS for Cumulative Year 2030 Baseline Plus Project No BRT conditions with and without Mitigation Measures TRANS-1 through TRANS-9 as identified in the EIR. In addition, the Cumulative Year 2030 Baseline Plus Project Plus BRT conditions analysis also accounts for implementation of the mitigation measures TRANS 1 through TRANS 9 at the study intersections. Thus, comparison of the Cumulative Year 2030 Baseline Plus Project Plus BRT conditions to Cumulative Year 2030 Baseline Plus Project No BRT (Mitigated) conditions shows the impacts of the BRT project assuming the completion of the MacArthur Transit Village project and implementation of mitigation measures TRANS-1 through TRANS-9.

As shown in Table 1, the implementation of the BRT would increase delay and degrade LOS at the seven studied intersections during both a.m. and p.m. peak hours, The following intersections would operate at unacceptable LOS E or LOS F regardless of the BRT project:

#2 Telegraph Avenue/52st Street and Claremont Avenue intersection

#3 Telegraph Avenue/51st Street intersection

#13 Telegraph Avenue/40th Street intersection

[1] *AC Transit East Bay Bus Rapid Transit Traffic Analysis Report* (Cambridge Systematics, April 2007)

FEHR & PEERS
TRANSPORTATION CONSULTANTS

Table 1
Cumulative Year 2030 Intersection Level of Service Summary

No.	Intersection	Traffic Control	Time Period	Cumulative Year 2030 Baseline Plus Project No BRT (Not Mitigated)		Cumulative Year 2030 Baseline Plus Project No BRT (Mitigated)		Cumulative Year 2030 Baseline Plus Project Plus BRT	
				LOS	Delay	LOS	Delay	LOS	Delay
2	Telegraph Avenue/52nd Street/Claremont Avenue	Signal	AM PM	**F** E	**>120** 72.9	**F** C	**>120** 31.6	**F** N/A	**>120** N/A
3	Telegraph Avenue/51st Street	Signal	AM PM	**F** **F**	**>120** **113.7**	**F** **F**	**>120** **109.2**	**F** N/A	**>120** N/A
6	Telegraph Avenue/45th Street	Signal	AM PM	B C	17.2 30.7	B C	17.2 30.7	N/A D	N/A 54.8
13	Telegraph Avenue/40th Street	Signal	AM PM	**F** **F**	**82.8** **0.5**	D D	54.5 53.5	**F** **F**	**>120** **>120**
18	Martin Luther King Jr. Way/ West MacArthur Boulevard	Signal	AM PM	B C	14.0 25.0	B C	13.5 20.8	N/A D	N/A 38.0
20	Telegraph Avenue/ West MacArthur Boulevard	Signal	AM PM	E **F**	63.9 **102.3**	D E	53.8 68.5	N/A **F**	N/A **113.7**
24	Telegraph Avenue/27th Street	Signal	AM PM	D D	48.4 44.0	D D	48.4 44.0	N/A D	N/A 48.8

Notes: N/A = Intersection was not analyzed in the BRT EIR during the AM peak hour.
Bold indicates significant impacts.
Source: Fehr & Peers, 2007.

The MacArthur Transit Village EIR identifies project impacts at four of the seven study intersections and proposes improvements to mitigate project impacts. Project Impacts at three of the four intersections can be mitigated to a less than significant level. However, the MacArthur Transit Village project impact at the Telegraph Avenue/51st Street intersection would be significant and unavoidable.

The BRT EIR identified the following impacts and mitigation measures in the study area:

#13 Telegraph Avenue/40Th Street – Modify traffic signal to provide protected/ permitted left-turns in the east/west approaches and provide either a second northbound and eastbound through lane or provide an exclusive right-turn lane in the southbound direction.

#20 Telegraph Avenue/MacArthur Boulevard – Either provide a second left-turn lane on northbound Telegraph Avenue or provide a second through lane on northbound Telegraph Avenue, and changes the lane configuration of eastbound

FEHR & PEERS
TRANSPORTATION CONSULTANTS

and westbound MacArthur Boulevard to two through lanes, one left-turn lane, and one right-turn lane. This second strategy includes the implementation of protected-permitted phasing for left turn lanes on MacArthur Boulevard

Table 2 summarizes intersection LOS at the four intersections that would operate at LOS E or LOS F under Cumulative Year 2030 Baseline Plus Project Plus BRT conditions with implementation of the mitigation measures identified in the BRT EIR. Although these improvements would improve intersection operations at the Telegraph Avenue/40th Street and Telegraph Avenue/MacArthur Boulevard intersections, both intersections would continue to operate at deficient LOS E or LOS F under Cumulative Year 2030 Baseline Plus Project Plus BRT conditions.

Table 2
Cumulative Year 2030 Mitigated Intersection Level of Service Summary

No.	Intersection	Traffic Control	Time Period	Cumulative Year 2030 Baseline Plus Project Plus BRT		Cumulative Year 2030 Baseline Plus Project Plus BRT (Mitigated)	
				LOS	Delay	LOS	Delay
2	Telegraph Avenue/52nd Street/Claremont Avenue	Signal	AM PM	**F** N/A	**>120** N/A	**F** N/A	**>120** N/A
3	Telegraph Avenue/51st Street	Signal	AM PM	**F** N/A	**>120** N/A	**F** N/A	**>120** N/A
13	Telegraph Avenue/40th Street	Signal	AM PM	**F** **F**	**>120** **>120**	**F** **F**	**>120** **82.1**
20	Telegraph Avenue/ West MacArthur Boulevard	Signal	AM PM	N/A **F**	N/A **113.7**	N/A **E**	N/A **73.7**

Notes: N/A = Intersection was not analyzed in the BRT EIR during the AM or PM peak hour.
Bold indicates significant impacts.
Source: Fehr & Peers, 2007.

These four intersections on Telegraph Avenue would continue to operate at deficient levels after implementation of feasible improvements identified in both BRT EIR and MacArthur Transit Village EIR under the Cumulative Year 2030 Baseline Plus Project Plus BRT conditions. Thus, the additional impacts of the BRT project on these intersections would be significant and unavoidable.

APPENDIX K:
BART RIDERSHIP ESTIMATES

APPENDIX K BART RIDERSHIP ESTIMATES

This section presents estimates of BART ridership changes due to the proposed MacArthur BART Transit Village project.

BACKGROUND

In order to develop the proposed Transit Village land uses, the development will replace the existing 618 surface parking spaces, dedicated for BART patron use, with 300 structured parking spaces. A residential parking permit (RPP) program is also planned for the neighborhoods within ¼ mile buffer of the station. The RPP would restrict parking in the neighborhood and would affect an estimated 216 BART patrons currently parked in the surrounding neighborhoods. The estimate of BART patrons parking in the neighborhood is based on license plate survey data collected in May 2006.

While the loss of BART patron parking spaces will result in a decrease in BART ridership and access mode shifts, the new land uses will result in an increase in ridership.

RIDERSHIP ESTIMATION TECHNIQUES

In order to quantify the change in BART ridership, three methodologies were considered:

The **ITE methodology** uses project-specific, land use-based ITE trip generation rates and transit reduction information collected at similar Bay Area transit-oriented developments. Review of the project land use program, Census data, Bay Area Transportation Survey data, field-collected transit-oriented development trip generation surveys and other transit-oriented development trip generation studies were conducted to develop trip generation rates for the transit village. These rates included an estimation of transit trips, which represent 19% of the total trips. See *MacArthur Transit Village Trip Generation* (Fehr & Peers, 2007) for more detail.

The **Willson methodology** uses BART's project-specific replacement parking for joint development methodology developed by Richard Willson, PhD (UCLA) and BART staff. Willson and BART developed this estimation technique to specifically address ridership loss at a station due to the removal of parking by accounting for the project land use program, the number of existing and proposed parking spaces, and information on non-personal vehicle-based station access modes. See *Replacement Parking for Joint Development: An Access Policy Methodology* (BART, 2005) for more detail.

The **Direct Ridership Model methodology** uses BART's station-area direct ridership models (DRM) developed by Fehr & Peers, ARUP, Nelson/Nygaard, Strategic Economics, and BART staff. The DRM are empirical-based, regression models that account for station characteristics including: surrounding population, surrounding employment, feeder transit service, parking levels, and access information by mode (walk, bicycle, transit, drive alone, carpool, and drop-off). See *Access BART* (BART, 2006) for more detail.

After reviewing the data inputs and assumptions of the three methodologies, the Willson methodology was selected for use by the City of Oakland and BART staff because it was developed by BART specifically for replacement parking and joint development applications. The total BART ridership was estimated by separating the ridership increase due to the transit village from the ridership decrease due to the on-site (and off-site) BART patron parking reduction. The following sections present the transit village and parking reduction BART ridership estimates.

TRANSIT VILLAGE BART RIDERSHIP ESTIMATES

As shown in Table 1, the estimated change in BART ridership due to the transit village will result in an increase of 855 daily, 115 AM peak hour, and 137 PM peak hour BART trips.

TABLE 1
BART RIDERSHIP CHANGES DUE TO TRANSIT VILLAGE

Type of Development	Amount	Total Trips	Trip Split	Disaggregated Trips	Percent BART Capture	Daily Trips	AM Peak Hour Trips[6]	PM Peak Hour Trips[6]
Residential (Dwelling Units)	675	3,254[1]						
Work Trips			25%	814	55.5%[4]	452	66	80
Non-Work Trips			75%	2,441	11.7%[4]	286	42	50
Retail (ksf)	44	1,950[2]	100%	1,950	5.00%[5]	98	6	6
Childcare (ksf)	5	396[3]	100%	396	5.00%[5]	20	1	1
Total BART Ridership Increase						**855**	**115**	**137**

Notes:

1 - Residential trip generation from ITE 7th Edition equation for Residential Condominium/Townhouse (Land Use 230). Daily Equation: Ln (T) = 0.85 Ln(X) + 2.55

2 - Retail trip generation from ITE 7th Edition equation for Specialty Retail (Land Use 814). Daily Rate: (T) = 44.32 (X)

3 – Child care trip generation from ITE 7th Edition equation for Child Care (Land Use 565). Daily Rate: (T) = 79.26 (X)

4 - Residential work and non-work BART trip shares based on average of rail shares for developments in Pleasant Hill and S. Alameda County are 40.5% and 8.55 percent respectively (Tables 5-8 on page 46 and Table 5-11 on page 51, CA TOD Report). These developments are suburban with an average of parking supply of 1.3 spaces per dwelling unit and located between 0.1 and 0.5 miles away from a BART Station. The proposed MacArthur Transit Village is in a more urban area, provides only one parking space per dwelling unit, and is immediately adjacent to a BART station. Based on data presented in Table 5-22 of the CA TOD report, the BART trip share capture is increased to account for the amount of parking provided at the site.

5 - Retail rail share based on rail shares for El Cerrito Plaza, Table 7-7, page 109 CA TOD Report.

6 - AM and PM peak hour transit trips based on AM/daily (Res = 14.6%, Non-Res = 6%) and PM/daily Res = 17.6%, Non-Res = 6%) ratios from EIR transit trip generation estimates.

Source: Fehr & Peers, 2007.

FEHR & PEERS
TRANSPORTATION CONSULTANTS

CHANGES IN PARKING SUPPLY BART RIDERSHIP ESTIMATES

As shown in Table 2, the estimated change in BART ridership due to the change in parking supply on-site will result in a decrease of 524 daily, 58 AM peak hour, and 63 PM peak hour BART trips. This analysis is conservative as it assumes that the BART riders who currently park at the BART Station parking lot would not shift to parking in the surrounding neighborhoods and those riders would be lost at the MacArthur Station.

TABLE 2
BART RIDERSHIP CHANGES DUE TO BART ON-SITE PARKING REDUCTION

Analysis Step	Daily	AM Peak Hour	PM Peak Hour
Number of Spaces Reduced	318		
Space Turnover (cars parked per day)	1		
Number of people per car	1.1		
Number of daily BART trips per person	2		
Number of auto access boardings and alightings reduced	700		
Percent that find another access mode and continue to use BART	25%[1]		
BART ridership retained, change to another access mode	175		
Total BART Ridership Decrease	**525**	**58**[2]	**63**[2]

Notes:

1 - Analysis assumes that 25 percent of riders switch to another BART access mode when their space is removed, and are therefore retained as BART riders. This assumption is based on BART direct ridership model data presented in the *Access BART* (BART, 2006) report for the MacArthur BART station.

2 - AM and PM peak hour transit trips based on January 207 boarding and alighting data at the MacArthur BART Station provided by BART (AM = 11% of daily and PM = 12% of daily).

Source: Fehr & Peers, 2007.

As shown in Table 3, the estimated change in BART ridership due to the change in parking supply on-site and implementation of the RPP will result in a decrease of 844 daily, 270 AM peak hour, and 84 PM peak hour BART trips.

SUMMARY OF BART RIDERSHIP ESTIMATES

As shown in Table 4, development of the Transit Village and the accompanying change in parking supply on-site will result in an increase of 331 daily, 57 AM peak hour, and 74 PM peak hour BART trips. Development of the Transit Village, the accompanying change in parking supply on-site, and the implementation of the RPP will result in an increase of 11 daily, 22 AM peak hour, and 36 PM peak hour BART trips.

Given the scale of existing BART ridership at the MacArthur BART station, development of the Transit Village will result in a small increase in daily, AM peak hour, and PM peak hour BART ridership levels. BART service from the MacArthur station is currently constrained by the capacity

of arriving trains, which are typically full, during the AM and PM peak hours. The estimated additional amount of peak hour trips would not be noticeable as it would be distributed throughout the peak hour.

TABLE 3
BART RIDERSHIP CHANGES DUE TO BART ON-SITE AND RPP PARKING REDUCTION

Analysis Step	Daily	AM Peak Hour	PM Peak Hour
Number of Spaces Reduced	512		
Space Turnover (cars parked per day)	1		
Number of people per car	1.1		
Number of daily BART trips per person	2		
Number of auto access boardings and alightings reduced	1126		
Percent that find another access mode and continue to use BART	25%[1]		
BART boardings retained, change to another access mode	282		
Total BART Ridership Decrease	**844**	**93**[2]	**101**[3]

Notes:

1 - Analysis assumes that 25 percent of riders switch to another BART access mode when their space is removed, and are therefore retained as BART riders. This assumption is based on BART direct ridership model data presented in the *Access BART* (BART, 2006) report for the MacArthur BART station.

2 - AM and PM peak hour transit trips based on January 207 boarding and alighting data at the MacArthur BART Station provided by BART (AM = 11% of daily and PM = 12% of daily).

Source: Fehr & Peers, 2007.

TABLE 4
SUMMARY OF BART RIDERSHIP CHANGES

Change Due To	Daily	AM Peak Hour	PM Peak Hour
Transit Village	855	115	137
On-Site Parking Reduction	-525	-58	-63
Total	**331**	**57**	**74**
Transit Village	855	115	137
On-Site and RPP Parking Reduction	-844	-93	-101
Total	**11**	**22**	**36**

Source: Fehr & Peers, 2007.

APPENDIX L:
EXISTING PLUS COMMERCIAL ALTERNATIVE
INTERSECTION LEVEL OF SERVICE CALCULATION WORKSHEETS

Movement	EBL	EBT	EBR	WBL	WBT	WBR	NBL	NBT	NBR	SBL	SBT	SBR
Lane Configurations												
Ideal Flow (vphpl)	1900	1900	1900	1900	1900	1900	1900	1900	1900	1900	1900	1900
Lane Width	12	12	12	12	12	12	16	16	16	16	16	16
Total Lost time (s)	4.0	4.0		4.0	4.0		2.0	2.0		2.0	2.0	
Lane Util. Factor	1.00	0.91		1.00	0.91		1.00	1.00		1.00	1.00	
Frpb, ped/bikes	1.00	0.99		1.00	0.99		1.00	0.99		1.00	0.98	
Flpb, ped/bikes	1.00	1.00		1.00	1.00		1.00	1.00		0.99	1.00	
Frt	1.00	0.97		1.00	0.98		1.00	0.98		1.00	0.93	
Flt Protected	0.95	1.00		0.95	1.00		0.95	1.00		0.95	1.00	
Satd. Flow (prot)	1770	4917		1770	4965		2006	2048		1983	1929	
Flt Permitted	0.95	1.00		0.95	1.00		0.10	1.00		0.47	1.00	
Satd. Flow (perm)	1770	4917		1770	4965		219	2048		977	1929	
Volume (vph)	288	909	182	65	1219	165	206	267	50	146	284	246
Peak-hour factor, PHF	0.95	0.95	0.95	0.95	0.95	0.95	0.95	0.95	0.95	0.95	0.95	0.95
Adj. Flow (vph)	303	957	192	68	1283	174	217	281	53	154	299	259
RTOR Reduction (vph)	0	21	0	0	14	0	0	6	0	0	27	0
Lane Group Flow (vph)	303	1128	0	68	1443	0	217	328	0	154	531	0
Confl. Peds. (#/hr)			10	10		10	10		10	10		10
Turn Type	Prot			Prot			pm+pt			Perm		
Protected Phases	7	4		3	8		5	2			6	
Permitted Phases							2			6		
Actuated Green, G (s)	17.0	55.9		8.6	47.5		45.0	45.0		36.0	36.0	
Effective Green, g (s)	17.0	55.9		8.6	47.5		45.5	45.5		36.5	36.5	
Actuated g/C Ratio	0.14	0.47		0.07	0.40		0.38	0.38		0.30	0.30	
Clearance Time (s)	4.0	4.0		4.0	4.0		4.0	2.5		2.5	2.5	
Vehicle Extension (s)	3.0	3.0		3.0	3.0		3.0	3.0		3.0	3.0	
Lane Grp Cap (vph)	251	2291		127	1965		187	777		297	587	
v/s Ratio Prot	c0.17	0.23		0.04	c0.29		c0.07	0.16			c0.28	
v/s Ratio Perm							0.37			0.16		
v/c Ratio	1.21	0.49		0.54	0.73		1.16	0.42		0.52	0.90	
Uniform Delay, d1	51.5	22.2		53.8	30.9		33.5	27.5		34.5	40.1	
Progression Factor	1.00	1.00		1.00	1.00		1.00	1.00		1.00	1.00	
Incremental Delay, d2	124.5	0.8		4.3	2.5		115.7	0.4		1.5	17.4	
Delay (s)	176.0	23.0		58.1	33.4		149.2	27.9		36.0	57.4	
Level of Service	F	C		E	C		F	C		D	E	
Approach Delay (s)		54.9			34.5			75.7			52.8	
Approach LOS		D			C			E			D	

Intersection Summary			
HCM Average Control Delay	49.9	HCM Level of Service	D
HCM Volume to Capacity ratio	0.88		
Actuated Cycle Length (s)	120.0	Sum of lost time (s)	12.0
Intersection Capacity Utilization	98.5%	ICU Level of Service	F
Analysis Period (min)	15		

c Critical Lane Group

Movement	EBL	EBT	EBR	WBL	WBT	WBR	NBL	NBT	NBR	SBL	SBT	SBR
Lane Configurations												
Ideal Flow (vphpl)	1900	1900	1900	1900	1900	1900	1900	1900	1900	1900	1900	1900
Total Lost time (s)		4.0		4.0	4.0			4.0		4.0	4.0	
Lane Util. Factor		1.00		0.95	0.95			0.95		1.00	0.95	
Frpb, ped/bikes		1.00		1.00	0.99			0.99		1.00	0.96	
Flpb, ped/bikes		1.00		1.00	1.00			1.00		1.00	1.00	
Frt		0.94		1.00	0.92			0.97		1.00	0.95	
Flt Protected		0.97		0.95	1.00			1.00		0.95	1.00	
Satd. Flow (prot)		1696		1681	1607			3406		1770	3207	
Flt Permitted		0.80		0.75	1.00			0.94		0.95	1.00	
Satd. Flow (perm)		1402		1321	1607			3214		1770	3207	
Volume (vph)	8	0	7	118	95	119	10	981	229	72	675	358
Peak-hour factor, PHF	0.93	0.93	0.93	0.93	0.93	0.93	0.93	0.93	0.93	0.93	0.93	0.93
Adj. Flow (vph)	9	0	8	127	102	128	11	1055	246	77	726	385
RTOR Reduction (vph)	0	8	0	0	61	0	0	15	0	0	47	0
Lane Group Flow (vph)	0	9	0	127	169	0	0	1297	0	77	1064	0
Confl. Peds. (#/hr)	4					4	44		12	12		44
Turn Type	Perm			Perm			Perm			Prot		
Protected Phases		7			8			2		1	6	
Permitted Phases	7			8			2					
Actuated Green, G (s)		3.3		13.1	13.1			48.6		7.0	60.1	
Effective Green, g (s)		3.8		13.6	13.6			49.1		7.5	60.6	
Actuated g/C Ratio		0.04		0.15	0.15			0.55		0.08	0.67	
Clearance Time (s)		4.5		4.5	4.5			4.5		4.5	4.5	
Vehicle Extension (s)		2.0		2.0	2.0			2.0		2.0	2.0	
Lane Grp Cap (vph)		59		200	243			1753		148	2159	
v/s Ratio Prot										0.04	c0.33	
v/s Ratio Perm		c0.01		0.10	0.11			c0.40				
v/c Ratio		0.16		0.64	0.69			0.74		0.52	0.49	
Uniform Delay, d1		41.6		35.9	36.2			15.6		39.5	7.2	
Progression Factor		1.00		1.00	1.00			1.04		1.00	1.00	
Incremental Delay, d2		0.5		4.8	6.8			1.5		1.5	0.8	
Delay (s)		42.0		40.6	43.0			17.7		41.0	8.0	
Level of Service		D		D	D			B		D	A	
Approach Delay (s)		42.0			42.2			17.7			10.1	
Approach LOS		D			D			B			B	

Intersection Summary			
HCM Average Control Delay	17.8	HCM Level of Service	B
HCM Volume to Capacity ratio	0.69		
Actuated Cycle Length (s)	90.0	Sum of lost time (s)	16.0
Intersection Capacity Utilization	77.9%	ICU Level of Service	D
Analysis Period (min)	15		

c Critical Lane Group

Movement	EBL	EBT	EBR	WBL	WBT	WBR	NBL	NBT	NBR	SBL	SBT	SBR
Lane Configurations												
Ideal Flow (vphpl)	1900	1900	1900	1900	1900	1900	1900	1900	1900	1900	1900	1900
Total Lost time (s)	4.0	4.0		4.0	4.0		4.0	4.0		4.0	4.0	
Lane Util. Factor	0.97	0.95		1.00	0.95		1.00	0.95		1.00	0.95	
Frpb, ped/bikes	1.00	0.99		1.00	1.00		1.00	0.99		1.00	0.98	
Flpb, ped/bikes	1.00	1.00		1.00	1.00		1.00	1.00		1.00	1.00	
Frt	1.00	0.98		1.00	0.96		1.00	0.98		1.00	0.97	
Flt Protected	0.95	1.00		0.95	1.00		0.95	1.00		0.95	1.00	
Satd. Flow (prot)	3433	3430		1770	3398		1770	3440		1770	3358	
Flt Permitted	0.95	1.00		0.95	1.00		0.95	1.00		0.95	1.00	
Satd. Flow (perm)	3433	3430		1770	3398		1770	3440		1770	3358	
Volume (vph)	450	533	88	101	677	209	107	588	99	140	526	143
Peak-hour factor, PHF	0.96	0.96	0.96	0.96	0.96	0.96	0.96	0.96	0.96	0.96	0.96	0.96
Adj. Flow (vph)	469	555	92	105	705	218	111	612	103	146	548	149
RTOR Reduction (vph)	0	14	0	0	32	0	0	15	0	0	26	0
Lane Group Flow (vph)	469	633	0	105	891	0	111	700	0	146	671	0
Confl. Peds. (#/hr)	6		24	24		6	36		28	28		36
Turn Type	Prot			Prot			Prot			Prot		
Protected Phases	7	4		3	8		5	2		1	6	
Permitted Phases												
Actuated Green, G (s)	13.0	30.6		7.9	25.5		8.0	24.4		10.1	26.5	
Effective Green, g (s)	12.5	31.6		7.4	26.5		7.5	25.4		9.6	27.5	
Actuated g/C Ratio	0.14	0.35		0.08	0.29		0.08	0.28		0.11	0.31	
Clearance Time (s)	3.5	5.0		3.5	5.0		3.5	5.0		3.5	5.0	
Vehicle Extension (s)	2.0	2.0		2.0	2.0		2.0	2.0		2.0	2.0	
Lane Grp Cap (vph)	477	1204		146	1001		148	971		189	1026	
v/s Ratio Prot	c0.14	0.18		0.06	c0.26		0.06	c0.20		c0.08	0.20	
v/s Ratio Perm												
v/c Ratio	0.98	0.53		0.72	0.89		0.75	0.72		0.77	0.65	
Uniform Delay, d1	38.6	23.2		40.3	30.4		40.3	29.1		39.1	27.1	
Progression Factor	1.00	1.00		1.00	1.00		1.00	1.00		1.11	0.82	
Incremental Delay, d2	36.5	0.2		13.2	9.5		17.1	4.6		14.4	2.8	
Delay (s)	75.2	23.4		53.4	39.9		57.4	33.7		58.0	25.2	
Level of Service	E	C		D	D		E	C		E	C	
Approach Delay (s)		45.2			41.3			36.9			30.9	
Approach LOS		D			D			D			C	

Intersection Summary			
HCM Average Control Delay	39.2	HCM Level of Service	D
HCM Volume to Capacity ratio	0.83		
Actuated Cycle Length (s)	90.0	Sum of lost time (s)	16.0
Intersection Capacity Utilization	79.2%	ICU Level of Service	D
Analysis Period (min)	15		

c Critical Lane Group

Movement	EBL	EBT	EBR	WBL	WBT	WBR	NBL	NBT	NBR	SBL	SBT	SBR
Lane Configurations												
Ideal Flow (vphpl)	1900	1900	1900	1900	1900	1900	1900	1900	1900	1900	1900	1900
Total Lost time (s)		4.0						4.0		4.0	4.0	
Lane Util. Factor		1.00						0.95		0.97	0.95	
Frt		0.86						0.93		1.00	0.97	
Flt Protected		1.00						1.00		0.95	1.00	
Satd. Flow (prot)		1611						3287		3433	3449	
Flt Permitted		1.00						0.95		0.95	1.00	
Satd. Flow (perm)		1611						3117		3433	3449	
Volume (vph)	0	0	7	0	0	0	7	321	293	1585	274	56
Peak-hour factor, PHF	0.92	0.92	0.92	0.92	0.92	0.92	0.92	0.92	0.92	0.92	0.92	0.92
Adj. Flow (vph)	0	0	8	0	0	0	8	349	318	1723	298	61
RTOR Reduction (vph)	0	8	0	0	0	0	0	24	0	0	0	0
Lane Group Flow (vph)	0	0	0	0	0	0	0	651	0	1723	359	0
Turn Type										Prot		
Protected Phases								2		1	6	
Permitted Phases												
Actuated Green, G (s)		0.0						8.0		29.0	45.0	
Effective Green, g (s)		0.0						8.0		29.0	45.0	
Actuated g/C Ratio		0.00						0.18		0.64	1.00	
Clearance Time (s)								4.0		4.0	2.0	
Lane Grp Cap (vph)		0						554		2212	3449	
v/s Ratio Prot										c0.50	0.10	
v/s Ratio Perm								c0.21				
v/c Ratio		0.00						10.97dr		0.78	0.10	
Uniform Delay, d1		22.5						18.5		5.7	0.0	
Progression Factor		1.00						0.76		1.00	1.00	
Incremental Delay, d2		0.0						95.8		2.8	0.1	
Delay (s)		22.5						109.8		8.5	0.1	
Level of Service		C						F		A	A	
Approach Delay (s)		22.5			0.0			109.8			7.0	
Approach LOS		C			A			F			A	

Intersection Summary			
HCM Average Control Delay	32.2	HCM Level of Service	C
HCM Volume to Capacity ratio	0.86		
Actuated Cycle Length (s)	45.0	Sum of lost time (s)	8.0
Intersection Capacity Utilization	77.0%	ICU Level of Service	D
Analysis Period (min)	15		

dr Defacto Right Lane. Recode with 1 though lane as a right lane.

c Critical Lane Group

Movement	EBL	EBT	EBR	WBL	WBT	WBR	NBL	NBT	NBR	SBL	SBT	SBR
Lane Configurations												
Ideal Flow (vphpl)	1900	1900	1900	1900	1900	1900	1900	1900	1900	1900	1900	1900
Total Lost time (s)		4.0			4.0			4.0			4.0	
Lane Util. Factor		1.00			1.00			0.95			0.95	
Frpb, ped/bikes		0.97			0.96			0.98			0.99	
Flpb, ped/bikes		0.97			0.97			1.00			1.00	
Frt		0.98			0.94			0.98			0.99	
Flt Protected		0.98			0.98			1.00			1.00	
Satd. Flow (prot)		1668			1596			3391			3459	
Flt Permitted		0.80			0.88			0.92			0.88	
Satd. Flow (perm)		1363			1418			3141			3053	
Volume (vph)	69	50	27	51	44	72	24	463	80	41	428	28
Peak-hour factor, PHF	0.90	0.90	0.90	0.90	0.90	0.90	0.90	0.90	0.90	0.90	0.90	0.90
Adj. Flow (vph)	77	56	30	57	49	80	27	514	89	46	476	31
RTOR Reduction (vph)	0	18	0	0	53	0	0	29	0	0	10	0
Lane Group Flow (vph)	0	145	0	0	133	0	0	601	0	0	543	0
Confl. Peds. (#/hr)	100		100	100		100	100		100	100		100
Turn Type	Perm			Perm			Perm			Perm		
Protected Phases		4			8			2			6	
Permitted Phases	4			8			2			6		
Actuated Green, G (s)		15.0			15.0			22.0			22.0	
Effective Green, g (s)		15.0			15.0			22.0			22.0	
Actuated g/C Ratio		0.33			0.33			0.49			0.49	
Clearance Time (s)		4.0			4.0			4.0			4.0	
Lane Grp Cap (vph)		454			473			1536			1493	
v/s Ratio Prot												
v/s Ratio Perm		c0.11			0.09			c0.19			0.18	
v/c Ratio		0.32			0.28			0.39			0.36	
Uniform Delay, d1		11.2			11.0			7.3			7.1	
Progression Factor		1.00			1.00			1.00			1.00	
Incremental Delay, d2		1.8			1.5			0.8			0.7	
Delay (s)		13.0			12.5			8.0			7.8	
Level of Service		B			B			A			A	
Approach Delay (s)		13.0			12.5			8.0			7.8	
Approach LOS		B			B			A			A	

Intersection Summary			
HCM Average Control Delay	9.0	HCM Level of Service	A
HCM Volume to Capacity ratio	0.36		
Actuated Cycle Length (s)	45.0	Sum of lost time (s)	8.0
Intersection Capacity Utilization	60.8%	ICU Level of Service	B
Analysis Period (min)	15		
c Critical Lane Group			

Movement	EBL	EBT	EBR	WBL	WBT	WBR	NBL	NBT	NBR	SBL	SBT	SBR
Lane Configurations												
Ideal Flow (vphpl)	1900	1900	1900	1900	1900	1900	1900	1900	1900	1900	1900	1900
Total Lost time (s)		4.0			4.0			4.0			4.0	
Lane Util. Factor		1.00			1.00			0.95			0.91	
Frpb, ped/bikes		0.96			0.96			0.99			0.98	
Flpb, ped/bikes		0.97			0.98			1.00			1.00	
Frt		0.96			0.96			0.99			0.99	
Flt Protected		0.99			0.99			1.00			1.00	
Satd. Flow (prot)		1642			1657			3456			4892	
Flt Permitted		0.82			0.80			0.90			0.81	
Satd. Flow (perm)		1359			1335			3127			3994	
Volume (vph)	51	74	52	34	57	36	22	939	47	61	1023	83
Peak-hour factor, PHF	0.90	0.90	0.90	0.90	0.90	0.90	0.90	0.90	0.90	0.90	0.90	0.90
Adj. Flow (vph)	57	82	58	38	63	40	24	1043	52	68	1137	92
RTOR Reduction (vph)	0	24	0	0	24	0	0	2	0	0	5	0
Lane Group Flow (vph)	0	173	0	0	117	0	0	1117	0	0	1292	0
Confl. Peds. (#/hr)	100		100	100		100	100		100	100		100
Turn Type	Perm			Perm			Perm			Perm		
Protected Phases		4			4			2			6	
Permitted Phases	4			4			2			6		
Actuated Green, G (s)		13.1			13.1			62.9			62.9	
Effective Green, g (s)		13.6			13.6			63.4			63.4	
Actuated g/C Ratio		0.16			0.16			0.75			0.75	
Clearance Time (s)		4.5			4.5			4.5			4.5	
Vehicle Extension (s)		2.0			2.0			2.0			2.0	
Lane Grp Cap (vph)		217			214			2332			2979	
v/s Ratio Prot												
v/s Ratio Perm		c0.13			0.09			c0.36			0.32	
v/c Ratio		0.80			0.55			0.48			0.43	
Uniform Delay, d1		34.4			32.9			4.3			4.1	
Progression Factor		1.00			1.00			1.52			1.00	
Incremental Delay, d2		16.9			1.5			0.7			0.5	
Delay (s)		51.3			34.4			7.2			4.5	
Level of Service		D			C			A			A	
Approach Delay (s)		51.3			34.4			7.2			4.5	
Approach LOS		D			C			A			A	

Intersection Summary			
HCM Average Control Delay	10.5	HCM Level of Service	B
HCM Volume to Capacity ratio	0.53		
Actuated Cycle Length (s)	85.0	Sum of lost time (s)	8.0
Intersection Capacity Utilization	89.1%	ICU Level of Service	E
Analysis Period (min)	15		
c Critical Lane Group			

Movement	EBL	EBT	EBR	WBL	WBT	WBR	NBL	NBT	NBR	SBL	SBT	SBR
Lane Configurations												
Ideal Flow (vphpl)	1900	1900	1900	1900	1900	1900	1900	1900	1900	1900	1900	1900
Total Lost time (s)	4.0	4.0		4.0	4.0		4.0	4.0		4.0	4.0	
Lane Util. Factor	1.00	0.95		1.00	0.95		1.00	1.00		1.00	1.00	
Frpb, ped/bikes	1.00	1.00		1.00	0.99		1.00	0.99		1.00	1.00	
Flpb, ped/bikes	0.98	1.00		0.99	1.00		1.00	1.00		0.98	1.00	
Frt	1.00	0.99		1.00	0.99		1.00	0.98		1.00	0.99	
Flt Protected	0.95	1.00		0.95	1.00		0.95	1.00		0.95	1.00	
Satd. Flow (prot)	1731	3478		1757	3471		1766	1805		1734	1841	
Flt Permitted	0.32	1.00		0.45	1.00		0.62	1.00		0.62	1.00	
Satd. Flow (perm)	578	3478		840	3471		1145	1805		1140	1841	
Volume (vph)	19	312	35	28	451	43	82	160	32	91	187	15
Peak-hour factor, PHF	0.91	0.91	0.91	0.91	0.91	0.91	0.91	0.91	0.91	0.91	0.91	0.91
Adj. Flow (vph)	21	343	38	31	496	47	90	176	35	100	205	16
RTOR Reduction (vph)	0	11	0	0	9	0	0	9	0	0	3	0
Lane Group Flow (vph)	21	370	0	31	534	0	90	202	0	100	218	0
Confl. Peds. (#/hr)	30		12	12		30	6		54	54		6
Turn Type	Perm			Perm			Perm			Perm		
Protected Phases		4			8			2			6	
Permitted Phases	4			8			2			6		
Actuated Green, G (s)	24.0	24.0		24.0	24.0		49.5	49.5		49.5	49.5	
Effective Green, g (s)	23.0	23.0		23.0	23.0		49.0	49.0		49.0	49.0	
Actuated g/C Ratio	0.29	0.29		0.29	0.29		0.61	0.61		0.61	0.61	
Clearance Time (s)	3.0	3.0		3.0	3.0		3.5	3.5		3.5	3.5	
Lane Grp Cap (vph)	166	1000		242	998		701	1106		698	1128	
v/s Ratio Prot		0.11			c0.15			0.11			c0.12	
v/s Ratio Perm	0.04			0.04			0.08			0.09		
v/c Ratio	0.13	0.37		0.13	0.54		0.13	0.18		0.14	0.19	
Uniform Delay, d1	21.1	22.7		21.1	24.0		6.5	6.8		6.6	6.8	
Progression Factor	1.00	1.00		0.91	0.98		1.00	1.00		1.00	1.00	
Incremental Delay, d2	1.6	1.1		1.1	2.0		0.4	0.4		0.4	0.4	
Delay (s)	22.6	23.8		20.3	25.5		6.9	7.1		7.0	7.2	
Level of Service	C	C		C	C		A	A		A	A	
Approach Delay (s)		23.7			25.2			7.1			7.1	
Approach LOS		C			C			A			A	

Intersection Summary			
HCM Average Control Delay	17.8	HCM Level of Service	B
HCM Volume to Capacity ratio	0.30		
Actuated Cycle Length (s)	80.0	Sum of lost time (s)	8.0
Intersection Capacity Utilization	78.3%	ICU Level of Service	D
Analysis Period (min)	15		
c Critical Lane Group			

Movement	EBL	EBT	EBR	WBL	WBT	WBR	NBL	NBT	NBR	SBL	SBT	SBR
Lane Configurations												
Ideal Flow (vphpl)	1900	1900	1900	1900	1900	1900	1900	1900	1900	1900	1900	1900
Total Lost time (s)	4.0	4.0		4.0	4.0			4.0			4.0	
Lane Util. Factor	1.00	0.95		1.00	0.95			0.95			0.95	
Frpb, ped/bikes	1.00	0.99		1.00	1.00			0.99			1.00	
Flpb, ped/bikes	0.99	1.00		0.98	1.00			1.00			1.00	
Frt	1.00	0.98		1.00	0.99			0.96			0.97	
Flt Protected	0.95	1.00		0.95	1.00			0.99			0.99	
Satd. Flow (prot)	1759	3464		1738	3517			3343			3371	
Flt Permitted	0.44	1.00		0.45	1.00			0.85			0.88	
Satd. Flow (perm)	810	3464		826	3517			2872			2985	
Volume (vph)	15	397	48	29	450	17	61	101	50	26	66	25
Peak-hour factor, PHF	0.95	0.95	0.95	0.95	0.95	0.95	0.95	0.95	0.95	0.95	0.95	0.95
Adj. Flow (vph)	16	418	51	31	474	18	64	106	53	27	69	26
RTOR Reduction (vph)	0	12	0	0	4	0	0	31	0	0	15	0
Lane Group Flow (vph)	16	457	0	31	488	0	0	192	0	0	107	0
Confl. Peds. (#/hr)	18		54	54		18	4		18	18		4
Turn Type	Perm			Perm			Perm			Perm		
Protected Phases		4			8			2			6	
Permitted Phases	4			8			2			6		
Actuated Green, G (s)	38.0	38.0		38.0	38.0			32.0			32.0	
Effective Green, g (s)	39.0	39.0		39.0	39.0			33.0			33.0	
Actuated g/C Ratio	0.49	0.49		0.49	0.49			0.41			0.41	
Clearance Time (s)	5.0	5.0		5.0	5.0			5.0			5.0	
Lane Grp Cap (vph)	395	1689		403	1715			1185			1231	
v/s Ratio Prot		0.13			c0.14							
v/s Ratio Perm	0.02			0.04				c0.07			0.04	
v/c Ratio	0.04	0.27		0.08	0.28			0.16			0.09	
Uniform Delay, d1	10.7	12.1		10.9	12.2			14.8			14.3	
Progression Factor	0.92	1.04		1.38	1.44			0.38			1.00	
Incremental Delay, d2	0.2	0.4		0.4	0.4			0.3			0.1	
Delay (s)	10.0	13.0		15.4	17.9			5.9			14.5	
Level of Service	B	B		B	B			A			B	
Approach Delay (s)		12.9			17.8			5.9			14.5	
Approach LOS		B			B			A			B	

Intersection Summary			
HCM Average Control Delay	13.8	HCM Level of Service	B
HCM Volume to Capacity ratio	0.23		
Actuated Cycle Length (s)	80.0	Sum of lost time (s)	8.0
Intersection Capacity Utilization	59.3%	ICU Level of Service	B
Analysis Period (min)	15		
c Critical Lane Group			

Movement	EBL	EBT	EBR	WBL	WBT	WBR	NBL	NBT	NBR	SBL	SBT	SBR
Lane Configurations												
Ideal Flow (vphpl)	1900	1900	1900	1900	1900	1900	1900	1900	1900	1900	1900	1900
Total Lost time (s)	4.0	4.0		4.0	4.0			4.0			4.0	
Lane Util. Factor	1.00	0.95		1.00	0.95			0.95			0.95	
Frpb, ped/bikes	1.00	1.00		1.00	0.99			0.99			1.00	
Flpb, ped/bikes	0.99	1.00		0.98	1.00			1.00			1.00	
Frt	1.00	0.99		1.00	0.97			0.97			0.99	
Flt Protected	0.95	1.00		0.95	1.00			1.00			0.99	
Satd. Flow (prot)	1759	3499		1731	3406			3375			3432	
Flt Permitted	0.42	1.00		0.46	1.00			0.91			0.79	
Satd. Flow (perm)	770	3499		839	3406			3071			2760	
Volume (vph)	31	420	25	89	409	107	30	226	77	79	217	29
Peak-hour factor, PHF	0.96	0.96	0.96	0.96	0.96	0.96	0.96	0.96	0.96	0.96	0.96	0.96
Adj. Flow (vph)	32	438	26	93	426	111	31	235	80	82	226	30
RTOR Reduction (vph)	0	5	0	0	29	0	0	36	0	0	9	0
Lane Group Flow (vph)	32	459	0	93	508	0	0	310	0	0	329	0
Confl. Peds. (#/hr)	13		71	71		13	22		22	22		22
Turn Type	Perm			Perm			Perm			Perm		
Protected Phases		4			8			2			6	
Permitted Phases	4			8			2			6		
Actuated Green, G (s)	41.5	41.5		41.5	41.5			32.0			32.0	
Effective Green, g (s)	41.0	41.0		41.0	41.0			31.0			31.0	
Actuated g/C Ratio	0.51	0.51		0.51	0.51			0.39			0.39	
Clearance Time (s)	3.5	3.5		3.5	3.5			3.0			3.0	
Lane Grp Cap (vph)	395	1793		430	1746			1190			1070	
v/s Ratio Prot		0.13			c0.15							
v/s Ratio Perm	0.04			0.11				0.10			c0.12	
v/c Ratio	0.08	0.26		0.22	0.29			0.26			0.31	
Uniform Delay, d1	9.9	10.9		10.7	11.2			16.7			17.0	
Progression Factor	1.31	1.42		1.00	1.00			0.70			1.00	
Incremental Delay, d2	0.4	0.3		1.2	0.4			0.5			0.7	
Delay (s)	13.4	15.8		11.8	11.6			12.1			17.8	
Level of Service	B	B		B	B			B			B	
Approach Delay (s)		15.7			11.6			12.1			17.8	
Approach LOS		B			B			B			B	

Intersection Summary			
HCM Average Control Delay	14.0	HCM Level of Service	B
HCM Volume to Capacity ratio	0.30		
Actuated Cycle Length (s)	80.0	Sum of lost time (s)	8.0
Intersection Capacity Utilization	101.6%	ICU Level of Service	G
Analysis Period (min)	15		
c Critical Lane Group			

Movement	EBT	EBR	WBL	WBT	NBL	NBR
Lane Configurations						
Ideal Flow (vphpl)	1900	1900	1900	1900	1900	1900
Total Lost time (s)	4.0		4.0	4.0	4.0	
Lane Util. Factor	0.95		1.00	0.95	1.00	
Frpb, ped/bikes	0.90		1.00	1.00	1.00	
Flpb, ped/bikes	1.00		1.00	1.00	1.00	
Frt	0.96		1.00	1.00	0.96	
Flt Protected	1.00		0.95	1.00	0.97	
Satd. Flow (prot)	3051		1770	3539	1731	
Flt Permitted	1.00		0.95	1.00	0.97	
Satd. Flow (perm)	3051		1770	3539	1731	
Volume (vph)	432	150	89	501	106	40
Peak-hour factor, PHF	0.91	0.91	0.91	0.91	0.91	0.91
Adj. Flow (vph)	475	165	98	551	116	44
RTOR Reduction (vph)	0	0	0	0	0	0
Lane Group Flow (vph)	640	0	98	551	160	0
Confl. Peds. (#/hr)		146	266			
Turn Type			Prot			
Protected Phases	4		3	8	2	
Permitted Phases						
Actuated Green, G (s)	51.7		8.9	64.6	12.4	
Effective Green, g (s)	51.7		8.9	64.6	12.4	
Actuated g/C Ratio	0.61		0.10	0.76	0.15	
Clearance Time (s)	4.0		4.0	4.0	4.0	
Vehicle Extension (s)	3.0		3.0	3.0	3.0	
Lane Grp Cap (vph)	1856		185	2690	253	
v/s Ratio Prot	c0.21		c0.06	0.16	c0.09	
v/s Ratio Perm						
v/c Ratio	0.34		0.53	0.20	0.63	
Uniform Delay, d1	8.3		36.1	2.9	34.2	
Progression Factor	1.00		1.44	0.43	1.24	
Incremental Delay, d2	0.5		2.2	0.1	5.1	
Delay (s)	8.8		54.2	1.4	47.6	
Level of Service	A		D	A	D	
Approach Delay (s)	8.8			9.4	47.6	
Approach LOS	A			A	D	

Intersection Summary			
HCM Average Control Delay	13.3	HCM Level of Service	B
HCM Volume to Capacity ratio	0.42		
Actuated Cycle Length (s)	85.0	Sum of lost time (s)	12.0
Intersection Capacity Utilization	41.8%	ICU Level of Service	A
Analysis Period (min)	15		
c Critical Lane Group			

Movement	EBL	EBT	EBR	WBL	WBT	WBR	NBL	NBT	NBR	SBL	SBT	SBR
Lane Configurations												
Ideal Flow (vphpl)	1900	1900	1900	1900	1900	1900	1900	1900	1900	1900	1900	1900
Total Lost time (s)	4.0	4.0		4.0	4.0		4.0	4.0		4.0	4.0	
Lane Util. Factor	1.00	0.95		1.00	0.95		1.00	0.95		1.00	0.95	
Frpb, ped/bikes	1.00	0.97		1.00	0.98		1.00	0.99		1.00	0.98	
Flpb, ped/bikes	0.94	1.00		0.92	1.00		1.00	1.00		1.00	1.00	
Frt	1.00	0.98		1.00	0.98		1.00	0.99		1.00	0.97	
Flt Protected	0.95	1.00		0.95	1.00		0.95	1.00		0.95	1.00	
Satd. Flow (prot)	1657	3360		1630	3375		1770	3449		1770	3377	
Flt Permitted	0.27	1.00		0.31	1.00		0.95	1.00		0.95	1.00	
Satd. Flow (perm)	473	3360		530	3375		1770	3449		1770	3377	
Volume (vph)	68	342	62	61	373	64	95	447	45	78	591	124
Peak-hour factor, PHF	0.90	0.90	0.90	0.90	0.90	0.90	0.90	0.90	0.90	0.90	0.90	0.90
Adj. Flow (vph)	76	380	69	68	414	71	106	497	50	87	657	138
RTOR Reduction (vph)	0	20	0	0	19	0	0	6	0	0	15	0
Lane Group Flow (vph)	76	429	0	68	466	0	106	541	0	87	780	0
Confl. Peds. (#/hr)	72		137	137		72			58	58		92
Turn Type	Perm			Perm			Prot			Prot		
Protected Phases		4			8		5	2		1	6	
Permitted Phases	4			8								
Actuated Green, G (s)	16.4	16.4		16.4	16.4		8.2	47.7		7.4	46.9	
Effective Green, g (s)	16.9	16.9		16.9	16.9		8.7	48.2		7.9	47.4	
Actuated g/C Ratio	0.20	0.20		0.20	0.20		0.10	0.57		0.09	0.56	
Clearance Time (s)	4.5	4.5		4.5	4.5		4.5	4.5		4.5	4.5	
Vehicle Extension (s)	2.0	2.0		2.0	2.0		2.0	2.0		2.0	2.0	
Lane Grp Cap (vph)	94	668		105	671		181	1956		165	1883	
v/s Ratio Prot		0.13			0.14		c0.06	0.16		0.05	c0.23	
v/s Ratio Perm	c0.16			0.13								
v/c Ratio	0.81	0.64		0.65	0.69		0.59	0.28		0.53	0.41	
Uniform Delay, d1	32.5	31.3		31.3	31.6		36.4	9.4		36.8	10.8	
Progression Factor	1.68	1.57		1.00	1.00		0.85	1.34		1.35	0.72	
Incremental Delay, d2	35.0	1.5		9.8	2.5		3.0	0.3		1.3	0.6	
Delay (s)	89.4	50.8		41.2	34.2		34.0	13.0		51.0	8.4	
Level of Service	F	D		D	C		C	B		D	A	
Approach Delay (s)		56.4			35.0			16.4			12.6	
Approach LOS		E			D			B			B	

Intersection Summary			
HCM Average Control Delay	27.1	HCM Level of Service	C
HCM Volume to Capacity ratio	0.53		
Actuated Cycle Length (s)	85.0	Sum of lost time (s)	12.0
Intersection Capacity Utilization	60.7%	ICU Level of Service	B
Analysis Period (min)	15		

c Critical Lane Group

Movement	WBL	WBR	NBT	NBR	SBL	SBT
Lane Configurations						
Sign Control	Stop		Free			Free
Grade	0%		0%			0%
Volume (veh/h)	11	37	635	9	15	681
Peak Hour Factor	0.90	0.90	0.90	0.90	0.90	0.90
Hourly flow rate (vph)	12	41	706	10	17	757
Pedestrians	34		33			34
Lane Width (ft)	12.0		12.0			12.0
Walking Speed (ft/s)	4.0		4.0			4.0
Percent Blockage	3		3			3
Right turn flare (veh)						
Median type	None					
Median storage veh)						
Upstream signal (ft)			230			471
pX, platoon unblocked	0.96	0.96			0.96	
vC, conflicting volume	1189	426			750	
vC1, stage 1 conf vol						
vC2, stage 2 conf vol						
vCu, unblocked vol	1038	366			702	
tC, single (s)	6.8	6.9			4.1	
tC, 2 stage (s)						
tF (s)	3.5	3.3			2.2	
p0 queue free %	94	93			98	
cM capacity (veh/h)	201	574			834	

Direction, Lane #	WB 1	NB 1	NB 2	SB 1	SB 2	SB 3
Volume Total	53	470	245	17	378	378
Volume Left	12	0	0	17	0	0
Volume Right	41	0	10	0	0	0
cSH	402	1700	1700	834	1700	1700
Volume to Capacity	0.13	0.28	0.14	0.02	0.22	0.22
Queue Length 95th (ft)	11	0	0	2	0	0
Control Delay (s)	15.3	0.0	0.0	9.4	0.0	0.0
Lane LOS	C			A		
Approach Delay (s)	15.3	0.0		0.2		
Approach LOS	C					

Intersection Summary			
Average Delay	0.6		
Intersection Capacity Utilization	36.2%	ICU Level of Service	A
Analysis Period (min)	15		

Movement	EBL	EBT	EBR	WBL	WBT	WBR	NBL	NBT	NBR	SBL	SBT	SBR
Lane Configurations												
Ideal Flow (vphpl)	1900	1900	1900	1900	1900	1900	1900	1900	1900	1900	1900	1900
Total Lost time (s)		4.0		4.0	4.0			4.0		4.0	4.0	
Lane Util. Factor		0.91		1.00	0.95			1.00		1.00	1.00	
Frpb, ped/bikes		1.00		1.00	1.00			0.99		1.00	1.00	
Flpb, ped/bikes		1.00		0.99	1.00			1.00		0.97	1.00	
Frt		0.99		1.00	0.97			0.98		1.00	0.99	
Flt Protected		1.00		0.95	1.00			0.99		0.95	1.00	
Satd. Flow (prot)		4989		1754	3419			1777		1725	1842	
Flt Permitted		0.88		0.52	1.00			0.88		0.43	1.00	
Satd. Flow (perm)		4417		964	3419			1584		787	1842	
Volume (vph)	34	283	25	51	274	67	58	180	49	64	188	12
Peak-hour factor, PHF	0.92	0.92	0.92	0.92	0.92	0.92	0.92	0.92	0.92	0.92	0.92	0.92
Adj. Flow (vph)	37	308	27	55	298	73	63	196	53	70	204	13
RTOR Reduction (vph)	0	10	0	0	25	0	0	8	0	0	3	0
Lane Group Flow (vph)	0	362	0	55	346	0	0	304	0	70	214	0
Confl. Peds. (#/hr)	24		18	18		24	24		48	48		24
Turn Type	Perm			Perm			Perm			Perm		
Protected Phases		4			8			2			6	
Permitted Phases	4			8			2			6		
Actuated Green, G (s)		51.0		51.0	51.0			24.0		24.0	24.0	
Effective Green, g (s)		52.0		52.0	52.0			25.0		25.0	25.0	
Actuated g/C Ratio		0.61		0.61	0.61			0.29		0.29	0.29	
Clearance Time (s)		5.0		5.0	5.0			5.0		5.0	5.0	
Lane Grp Cap (vph)		2702		590	2092			466		231	542	
v/s Ratio Prot					c0.10						0.12	
v/s Ratio Perm		0.08		0.06				c0.19		0.09		
v/c Ratio		0.13		0.09	0.17			0.65		0.30	0.40	
Uniform Delay, d1		7.0		6.8	7.1			26.2		23.2	24.0	
Progression Factor		1.00		1.00	1.00			1.00		1.00	1.00	
Incremental Delay, d2		0.1		0.3	0.2			6.9		3.4	2.2	
Delay (s)		7.1		7.1	7.3			33.1		26.6	26.1	
Level of Service		A		A	A			C		C	C	
Approach Delay (s)		7.1			7.3			33.1			26.2	
Approach LOS		A			A			C			C	

Intersection Summary			
HCM Average Control Delay	16.9	HCM Level of Service	B
HCM Volume to Capacity ratio	0.32		
Actuated Cycle Length (s)	85.0	Sum of lost time (s)	8.0
Intersection Capacity Utilization	92.5%	ICU Level of Service	F
Analysis Period (min)	15		
c Critical Lane Group			

Movement	EBL	EBT	EBR	WBL	WBT	WBR	NBL	NBT	NBR	SBL	SBT	SBR
Lane Configurations												
Ideal Flow (vphpl)	1900	1900	1900	1900	1900	1900	1900	1900	1900	1900	1900	1900
Total Lost time (s)		4.0			4.0		4.0	4.0		4.0	4.0	
Lane Util. Factor		0.91			0.91		1.00	1.00		1.00	1.00	
Frpb, ped/bikes		1.00			1.00		1.00	0.99		1.00	1.00	
Flpb, ped/bikes		1.00			1.00		0.99	1.00		0.99	1.00	
Frt		1.00			0.99		1.00	0.96		1.00	0.99	
Flt Protected		1.00			1.00		0.95	1.00		0.95	1.00	
Satd. Flow (prot)		5051			4992		1750	1780		1747	1837	
Flt Permitted		0.90			0.88		0.64	1.00		0.44	1.00	
Satd. Flow (perm)		4566			4407		1179	1780		801	1837	
Volume (vph)	25	387	7	34	337	33	30	175	57	23	116	10
Peak-hour factor, PHF	0.92	0.92	0.92	0.92	0.92	0.92	0.92	0.92	0.92	0.92	0.92	0.92
Adj. Flow (vph)	27	421	8	37	366	36	33	190	62	25	126	11
RTOR Reduction (vph)	0	2	0	0	13	0	0	15	0	0	4	0
Lane Group Flow (vph)	0	454	0	0	426	0	33	237	0	25	133	0
Confl. Peds. (#/hr)			18	18			12		18	18		12
Turn Type	Perm			Perm			Perm			Perm		
Protected Phases		4			8			2			6	
Permitted Phases	4			8			2			6		
Actuated Green, G (s)		50.0			50.0		19.0	19.0		19.0	19.0	
Effective Green, g (s)		51.5			51.5		20.5	20.5		20.5	20.5	
Actuated g/C Ratio		0.64			0.64		0.26	0.26		0.26	0.26	
Clearance Time (s)		5.5			5.5		5.5	5.5		5.5	5.5	
Lane Grp Cap (vph)		2939			2837		302	456		205	471	
v/s Ratio Prot								c0.13			0.07	
v/s Ratio Perm		c0.10			0.10		0.03			0.03		
v/c Ratio		0.15			0.15		0.11	0.52		0.12	0.28	
Uniform Delay, d1		5.6			5.6		22.8	25.5		22.8	23.9	
Progression Factor		1.00			0.80		1.00	1.00		0.97	0.97	
Incremental Delay, d2		0.1			0.1		0.7	4.2		1.2	1.5	
Delay (s)		5.7			4.6		23.5	29.7		23.3	24.5	
Level of Service		A			A		C	C		C	C	
Approach Delay (s)		5.7			4.6			29.0			24.4	
Approach LOS		A			A			C			C	

Intersection Summary			
HCM Average Control Delay	12.6	HCM Level of Service	B
HCM Volume to Capacity ratio	0.26		
Actuated Cycle Length (s)	80.0	Sum of lost time (s)	8.0
Intersection Capacity Utilization	51.3%	ICU Level of Service	A
Analysis Period (min)	15		
c Critical Lane Group			

Movement	EBL	EBT	EBR	WBL	WBT	WBR	NBL	NBT	NBR	SBL	SBT	SBR
Lane Configurations												
Ideal Flow (vphpl)	1900	1900	1900	1900	1900	1900	1900	1900	1900	1900	1900	1900
Total Lost time (s)		4.0			4.0			4.0			4.0	
Lane Util. Factor		0.91			0.91			0.95			0.95	
Frpb, ped/bikes		1.00			1.00			1.00			1.00	
Flpb, ped/bikes		1.00			1.00			1.00			1.00	
Frt		0.99			0.97			0.98			0.98	
Flt Protected		0.99			1.00			1.00			0.99	
Satd. Flow (prot)		5001			4862			3426			3422	
Flt Permitted		0.84			0.86			0.92			0.84	
Satd. Flow (perm)		4200			4213			3158			2901	
Volume (vph)	52	396	28	45	361	122	15	165	33	61	209	37
Peak-hour factor, PHF	0.92	0.92	0.92	0.92	0.92	0.92	0.92	0.92	0.92	0.92	0.92	0.92
Adj. Flow (vph)	57	430	30	49	392	133	16	179	36	66	227	40
RTOR Reduction (vph)	0	9	0	0	47	0	0	19	0	0	13	0
Lane Group Flow (vph)	0	508	0	0	527	0	0	212	0	0	320	0
Confl. Peds. (#/hr)	17		19	19		17	12		16	16		12
Turn Type	Perm			Perm			Perm			Perm		
Protected Phases		4			8			2			6	
Permitted Phases	4			8			2			6		
Actuated Green, G (s)		50.0			50.0			19.0			19.0	
Effective Green, g (s)		51.5			51.5			20.5			20.5	
Actuated g/C Ratio		0.64			0.64			0.26			0.26	
Clearance Time (s)		5.5			5.5			5.5			5.5	
Lane Grp Cap (vph)		2704			2712			809			743	
v/s Ratio Prot												
v/s Ratio Perm		0.12			c0.13			0.07			c0.11	
v/c Ratio		0.19			0.19			0.26			0.43	
Uniform Delay, d1		5.8			5.8			23.7			24.9	
Progression Factor		0.79			1.00			1.00			0.53	
Incremental Delay, d2		0.2			0.2			0.8			1.8	
Delay (s)		4.7			6.0			24.5			14.9	
Level of Service		A			A			C			B	
Approach Delay (s)		4.7			6.0			24.5			14.9	
Approach LOS		A			A			C			B	

Intersection Summary			
HCM Average Control Delay	10.0	HCM Level of Service	A
HCM Volume to Capacity ratio	0.26		
Actuated Cycle Length (s)	80.0	Sum of lost time (s)	8.0
Intersection Capacity Utilization	82.6%	ICU Level of Service	E
Analysis Period (min)	15		
c Critical Lane Group			

Movement	EBL	EBT	EBR	WBL	WBT	WBR	NBL	NBT	NBR	SBL	SBT	SBR
Lane Configurations												
Ideal Flow (vphpl)	1900	1900	1900	1900	1900	1900	1900	1900	1900	1900	1900	1900
Total Lost time (s)		4.0			4.0			4.0			4.0	
Lane Util. Factor		0.91			0.91			1.00			1.00	
Frpb, ped/bikes		1.00			0.93			1.00			0.95	
Flpb, ped/bikes		1.00			1.00			1.00			1.00	
Frt		1.00			0.97			0.93			0.93	
Flt Protected		1.00			1.00			0.98			0.98	
Satd. Flow (prot)		5063			4583			1695			1617	
Flt Permitted		0.92			0.93			0.87			0.83	
Satd. Flow (perm)		4641			4267			1512			1372	
Volume (vph)	16	487	10	10	468	100	10	0	10	58	0	55
Peak-hour factor, PHF	0.90	0.90	0.92	0.92	0.90	0.90	0.92	0.92	0.92	0.90	0.92	0.90
Adj. Flow (vph)	18	541	11	11	520	111	11	0	11	64	0	61
RTOR Reduction (vph)	0	1	0	0	0	0	0	10	0	0	0	0
Lane Group Flow (vph)	0	569	0	0	642	0	0	12	0	0	125	0
Confl. Peds. (#/hr)						98						98
Turn Type	Perm			Perm			Perm			Perm		
Protected Phases		4			8			2			6	
Permitted Phases	4			8			2			6		
Actuated Green, G (s)		67.1			67.1			9.9			9.9	
Effective Green, g (s)		67.1			67.1			9.9			9.9	
Actuated g/C Ratio		0.79			0.79			0.12			0.12	
Clearance Time (s)		4.0			4.0			4.0			4.0	
Vehicle Extension (s)		3.0			3.0			3.0			3.0	
Lane Grp Cap (vph)		3664			3368			176			160	
v/s Ratio Prot												
v/s Ratio Perm		0.12			c0.15			0.01			c0.09	
v/c Ratio		0.16			0.19			0.07			0.78	
Uniform Delay, d1		2.1			2.2			33.4			36.5	
Progression Factor		1.00			0.34			1.00			0.74	
Incremental Delay, d2		0.1			0.1			0.2			20.4	
Delay (s)		2.2			0.9			33.6			47.3	
Level of Service		A			A			C			D	
Approach Delay (s)		2.2			0.9			33.6			47.3	
Approach LOS		A			A			C			D	

Intersection Summary			
HCM Average Control Delay	6.2	HCM Level of Service	A
HCM Volume to Capacity ratio	0.27		
Actuated Cycle Length (s)	85.0	Sum of lost time (s)	8.0
Intersection Capacity Utilization	51.7%	ICU Level of Service	A
Analysis Period (min)	15		
c Critical Lane Group			

Movement	EBL	EBT	EBR	WBL	WBT	WBR	NBL	NBT	NBR	SBL	SBT	SBR
Lane Configurations												
Ideal Flow (vphpl)	1900	1900	1900	1900	1900	1900	1900	1900	1900	1900	1900	1900
Total Lost time (s)		4.0			4.0		4.0	4.0		4.0	4.0	
Lane Util. Factor		0.91			0.91		1.00	0.95		1.00	0.95	
Frpb, ped/bikes		1.00			0.99		1.00	1.00		1.00	0.99	
Flpb, ped/bikes		1.00			1.00		0.99	1.00		0.98	1.00	
Frt		0.97			0.97		1.00	0.99		1.00	0.97	
Flt Protected		0.99			0.99		0.95	1.00		0.95	1.00	
Satd. Flow (prot)		4867			4813		1753	3477		1740	3396	
Flt Permitted		0.68			0.74		0.38	1.00		0.48	1.00	
Satd. Flow (perm)		3365			3583		703	3477		886	3396	
Volume (vph)	119	337	94	79	382	140	60	383	39	99	472	132
Peak-hour factor, PHF	0.92	0.92	0.92	0.92	0.92	0.92	0.92	0.92	0.92	0.92	0.92	0.92
Adj. Flow (vph)	129	366	102	86	415	152	65	416	42	108	513	143
RTOR Reduction (vph)	0	53	0	0	108	0	0	4	0	0	15	0
Lane Group Flow (vph)	0	544	0	0	545	0	65	454	0	108	641	0
Confl. Peds. (#/hr)	40		9			40	25		31	31		25
Turn Type	Perm			pm+pt			Perm			Perm		
Protected Phases		4		3	8			2			6	
Permitted Phases	4			8			2			6		
Actuated Green, G (s)		19.8			19.8		54.7	54.7		54.7	54.7	
Effective Green, g (s)		21.3			21.3		55.7	55.7		55.7	55.7	
Actuated g/C Ratio		0.25			0.25		0.66	0.66		0.66	0.66	
Clearance Time (s)		5.5			5.5		5.0	5.0		5.0	5.0	
Vehicle Extension (s)		2.0			2.0		2.0	2.0		2.0	2.0	
Lane Grp Cap (vph)		843			898		461	2278		581	2225	
v/s Ratio Prot								0.13			c0.19	
v/s Ratio Perm		c0.16			0.15		0.09			0.12		
v/c Ratio		0.65			0.61		0.14	0.20		0.19	0.29	
Uniform Delay, d1		28.5			28.2		5.6	5.8		5.8	6.2	
Progression Factor		0.84			1.00		1.20	1.13		0.61	0.74	
Incremental Delay, d2		1.3			0.8		0.6	0.2		0.7	0.3	
Delay (s)		25.3			29.0		7.3	6.7		4.2	4.9	
Level of Service		C			C		A	A		A	A	
Approach Delay (s)		25.3			29.0			6.8			4.8	
Approach LOS		C			C			A			A	

Intersection Summary			
HCM Average Control Delay	16.2	HCM Level of Service	B
HCM Volume to Capacity ratio	0.39		
Actuated Cycle Length (s)	85.0	Sum of lost time (s)	8.0
Intersection Capacity Utilization	70.4%	ICU Level of Service	C
Analysis Period (min)	15		

c Critical Lane Group

Movement	EBL	EBT	EBR	WBL	WBT	WBR	NBL	NBT	NBR	SBL	SBT	SBR
Lane Configurations												
Ideal Flow (vphpl)	1900	1900	1900	1900	1900	1900	1900	1900	1900	1900	1900	1900
Total Lost time (s)		4.0			4.0			4.0	4.0		4.0	
Lane Util. Factor		0.91			0.91			1.00	1.00		1.00	
Frpb, ped/bikes		1.00			0.99			1.00	0.88		0.95	
Flpb, ped/bikes		1.00			1.00			0.94	1.00		0.94	
Frt		1.00			0.98			1.00	0.85		0.94	
Flt Protected		1.00			1.00			0.97	1.00		0.97	
Satd. Flow (prot)		5042			4929			1685	1395		1524	
Flt Permitted		0.89			0.91			0.84	1.00		0.86	
Satd. Flow (perm)		4492			4495			1472	1395		1342	
Volume (vph)	25	468	9	24	574	75	17	7	13	47	1	41
Peak-hour factor, PHF	0.91	0.91	0.91	0.91	0.91	0.91	0.91	0.91	0.91	0.91	0.91	0.91
Adj. Flow (vph)	27	514	10	26	631	82	19	8	14	52	1	45
RTOR Reduction (vph)	0	2	0	0	20	0	0	0	10	0	32	0
Lane Group Flow (vph)	0	549	0	0	719	0	0	27	4	0	66	0
Confl. Peds. (#/hr)	100		100	100		100	100		100	100		100
Turn Type	Perm			Perm			Perm		Perm	Perm		
Protected Phases		4			8			2			6	
Permitted Phases	4			8			2		2	6		
Actuated Green, G (s)		48.0			48.0			23.0	23.0		23.0	
Effective Green, g (s)		48.5			48.5			23.5	23.5		23.5	
Actuated g/C Ratio		0.61			0.61			0.29	0.29		0.29	
Clearance Time (s)		4.5			4.5			4.5	4.5		4.5	
Lane Grp Cap (vph)		2723			2725			432	410		394	
v/s Ratio Prot												
v/s Ratio Perm		0.12			c0.16			0.02	0.00		c0.05	
v/c Ratio		0.20			0.26			0.06	0.01		0.17	
Uniform Delay, d1		7.1			7.4			20.3	20.0		21.0	
Progression Factor		1.00			1.00			1.00	1.00		1.00	
Incremental Delay, d2		0.2			0.2			0.3	0.0		0.9	
Delay (s)		7.2			7.6			20.6	20.1		21.9	
Level of Service		A			A			C	C		C	
Approach Delay (s)		7.2			7.6			20.4			21.9	
Approach LOS		A			A			C			C	

Intersection Summary			
HCM Average Control Delay	8.8	HCM Level of Service	A
HCM Volume to Capacity ratio	0.23		
Actuated Cycle Length (s)	80.0	Sum of lost time (s)	8.0
Intersection Capacity Utilization	81.7%	ICU Level of Service	D
Analysis Period (min)	15		

c Critical Lane Group

Movement	EBL	EBT	EBR	WBL	WBT	WBR	NBL	NBT	NBR	SBL	SBT	SBR
Lane Configurations												
Ideal Flow (vphpl)	1900	1900	1900	1900	1900	1900	1900	1900	1900	1900	1900	1900
Total Lost time (s)	4.0	4.0		4.0	4.0		4.0	4.0		4.0	4.0	
Lane Util. Factor	1.00	0.91		1.00	0.91		1.00	0.91		1.00	0.91	
Frpb, ped/bikes	1.00	0.99		1.00	0.99		1.00	0.99		1.00	1.00	
Flpb, ped/bikes	1.00	1.00		1.00	1.00		1.00	1.00		1.00	1.00	
Frt	1.00	0.98		1.00	0.95		1.00	0.98		1.00	0.98	
Flt Protected	0.95	1.00		0.95	1.00		0.95	1.00		0.95	1.00	
Satd. Flow (prot)	1770	4943		1770	4740		1770	4944		1770	4981	
Flt Permitted	0.95	1.00		0.95	1.00		0.95	1.00		0.95	1.00	
Satd. Flow (perm)	1770	4943		1770	4740		1770	4944		1770	4981	
Volume (vph)	70	409	55	112	441	253	89	261	42	226	522	64
Peak-hour factor, PHF	0.90	0.90	0.90	0.90	0.90	0.90	0.90	0.90	0.90	0.90	0.90	0.90
Adj. Flow (vph)	78	454	61	124	490	281	99	290	47	251	580	71
RTOR Reduction (vph)	0	18	0	0	108	0	0	25	0	0	17	0
Lane Group Flow (vph)	78	497	0	124	663	0	99	313	0	251	634	0
Confl. Peds. (#/hr)			66			23			38			26
Turn Type	Prot			Prot			Prot			Prot		
Protected Phases	3	4		3	4		1	2		1	2	
Permitted Phases												
Actuated Green, G (s)	10.5	26.5		10.5	26.5		9.0	26.0		9.0	26.0	
Effective Green, g (s)	10.5	27.5		10.5	27.5		9.0	27.0		9.0	27.0	
Actuated g/C Ratio	0.12	0.31		0.12	0.31		0.10	0.30		0.10	0.30	
Clearance Time (s)	4.0	5.0		4.0	5.0		4.0	5.0		4.0	5.0	
Vehicle Extension (s)	2.0	2.0		2.0	2.0		2.0	2.0		2.0	2.0	
Lane Grp Cap (vph)	207	1510		207	1448		177	1483		177	1494	
v/s Ratio Prot	0.04	0.10		c0.07	c0.14		0.06	0.06		c0.14	c0.13	
v/s Ratio Perm												
v/c Ratio	0.38	0.33		0.60	0.46		0.56	0.21		1.42	0.42	
Uniform Delay, d1	36.7	24.1		37.8	25.2		38.6	23.5		40.5	25.3	
Progression Factor	1.00	1.00		0.97	2.00		1.00	1.00		1.00	1.00	
Incremental Delay, d2	0.4	0.6		2.4	0.8		2.2	0.3		217.9	0.9	
Delay (s)	37.1	24.7		39.2	51.4		40.8	23.9		258.4	26.2	
Level of Service	D	C		D	D		D	C		F	C	
Approach Delay (s)		26.3			49.7			27.7			90.8	
Approach LOS		C			D			C			F	

Intersection Summary			
HCM Average Control Delay	54.5	HCM Level of Service	D
HCM Volume to Capacity ratio	0.58		
Actuated Cycle Length (s)	90.0	Sum of lost time (s)	16.0
Intersection Capacity Utilization	72.9%	ICU Level of Service	C
Analysis Period (min)	15		

c Critical Lane Group

Movement	EBL	EBT	EBR	WBL	WBT	WBR	NBL	NBT	NBR	SBL	SBT	SBR
Lane Configurations												
Ideal Flow (vphpl)	1900	1900	1900	1900	1900	1900	1900	1900	1900	1900	1900	1900
Total Lost time (s)		4.0			4.0		4.0	4.0		4.0	4.0	
Lane Util. Factor		1.00			1.00		1.00	0.95		1.00	0.95	
Frpb, ped/bikes		0.93			0.95		1.00	0.99		1.00	0.98	
Flpb, ped/bikes		0.97			0.97		0.91	1.00		0.93	1.00	
Frt		0.95			0.94		1.00	0.99		1.00	0.99	
Flt Protected		0.98			0.99		0.95	1.00		0.95	1.00	
Satd. Flow (prot)		1574			1584		1609	3488		1640	3435	
Flt Permitted		0.69			0.90		0.49	1.00		0.42	1.00	
Satd. Flow (perm)		1106			1442		831	3488		730	3435	
Volume (vph)	29	19	26	25	34	48	54	534	24	24	380	37
Peak-hour factor, PHF	0.92	0.92	0.92	0.92	0.92	0.92	0.92	0.92	0.92	0.92	0.92	0.92
Adj. Flow (vph)	32	21	28	27	37	52	59	580	26	26	413	40
RTOR Reduction (vph)	0	26	0	0	44	0	0	2	0	0	4	0
Lane Group Flow (vph)	0	55	0	0	72	0	59	604	0	26	449	0
Confl. Peds. (#/hr)	100		100	100		100	100		100	100		100
Turn Type	Perm			Perm			Perm			Perm		
Protected Phases		4			4			2			6	
Permitted Phases	4			4			2			6		
Actuated Green, G (s)		7.4			7.4		70.6	70.6		70.6	70.6	
Effective Green, g (s)		6.9			6.9		70.1	70.1		70.1	70.1	
Actuated g/C Ratio		0.08			0.08		0.82	0.82		0.82	0.82	
Clearance Time (s)		3.5			3.5		3.5	3.5		3.5	3.5	
Vehicle Extension (s)		2.0			2.0		2.0	2.0		2.0	2.0	
Lane Grp Cap (vph)		90			117		685	2877		602	2833	
v/s Ratio Prot								c0.17			0.13	
v/s Ratio Perm		c0.05			0.05		0.07			0.04		
v/c Ratio		0.61			0.61		0.09	0.21		0.04	0.16	
Uniform Delay, d1		37.8			37.8		1.4	1.6		1.4	1.5	
Progression Factor		1.00			1.00		1.00	1.00		0.67	0.62	
Incremental Delay, d2		8.4			6.6		0.2	0.2		0.1	0.1	
Delay (s)		46.2			44.3		1.7	1.7		1.0	1.1	
Level of Service		D			D		A	A		A	A	
Approach Delay (s)		46.2			44.3			1.7			1.0	
Approach LOS		D			D			A			A	

Intersection Summary			
HCM Average Control Delay	7.9	HCM Level of Service	A
HCM Volume to Capacity ratio	0.25		
Actuated Cycle Length (s)	85.0	Sum of lost time (s)	8.0
Intersection Capacity Utilization	54.6%	ICU Level of Service	A
Analysis Period (min)	15		

c Critical Lane Group

Movement	EBL	EBT	EBR	WBL	WBT	WBR	NBL	NBT	NBR	SBL	SBT	SBR
Lane Configurations												
Ideal Flow (vphpl)	1900	1900	1900	1900	1900	1900	1900	1900	1900	1900	1900	1900
Total Lost time (s)	4.0	4.0		4.0	4.0		4.0	4.0		4.0	4.0	
Lane Util. Factor	1.00	0.95		1.00	0.95		1.00	0.95		1.00	0.95	
Frpb, ped/bikes	1.00	0.97		1.00	0.94		1.00	0.99		1.00	0.95	
Flpb, ped/bikes	1.00	1.00		1.00	1.00		0.93	1.00		0.95	1.00	
Frt	1.00	0.97		1.00	0.95		1.00	0.99		1.00	0.96	
Flt Protected	0.95	1.00		0.95	1.00		0.95	1.00		0.95	1.00	
Satd. Flow (prot)	1770	3330		1770	3163		1646	3466		1678	3207	
Flt Permitted	0.95	1.00		0.95	1.00		0.41	1.00		0.49	1.00	
Satd. Flow (perm)	1770	3330		1770	3163		712	3466		866	3207	
Volume (vph)	255	350	97	50	270	118	58	335	30	46	335	141
Peak-hour factor, PHF	0.90	0.90	0.90	0.90	0.90	0.90	0.90	0.90	0.90	0.90	0.90	0.90
Adj. Flow (vph)	283	389	108	56	300	131	64	372	33	51	372	157
RTOR Reduction (vph)	0	28	0	0	64	0	0	6	0	0	45	0
Lane Group Flow (vph)	283	469	0	56	367	0	64	399	0	51	484	0
Confl. Peds. (#/hr)			100			100	100		100	100		100
Turn Type	Prot			Prot			Perm			Perm		
Protected Phases	7	4		3	8			2			6	
Permitted Phases							2			6		
Actuated Green, G (s)	16.5	26.9		4.9	15.3		39.7	39.7		39.7	39.7	
Effective Green, g (s)	17.0	26.4		5.4	14.8		41.2	41.2		41.2	41.2	
Actuated g/C Ratio	0.20	0.31		0.06	0.17		0.48	0.48		0.48	0.48	
Clearance Time (s)	4.5	3.5		4.5	3.5		5.5	5.5		5.5	5.5	
Vehicle Extension (s)	2.0	2.0		2.0	2.0		2.0	2.0		2.0	2.0	
Lane Grp Cap (vph)	354	1034		112	551		345	1680		420	1554	
v/s Ratio Prot	c0.16	0.14		0.03	c0.12			0.12			c0.15	
v/s Ratio Perm							0.09			0.06		
v/c Ratio	0.80	0.45		0.50	0.67		0.19	0.24		0.12	0.31	
Uniform Delay, d1	32.4	23.5		38.5	32.8		12.4	12.8		12.0	13.3	
Progression Factor	1.00	1.00		1.00	1.00		1.00	1.00		1.00	1.00	
Incremental Delay, d2	11.2	0.1		1.3	2.4		1.2	0.3		0.6	0.5	
Delay (s)	43.6	23.6		39.8	35.1		13.6	13.1		12.6	13.8	
Level of Service	D	C		D	D		B	B		B	B	
Approach Delay (s)		30.9			35.7			13.2			13.7	
Approach LOS		C			D			B			B	

Intersection Summary			
HCM Average Control Delay	24.0	HCM Level of Service	C
HCM Volume to Capacity ratio	0.50		
Actuated Cycle Length (s)	85.0	Sum of lost time (s)	12.0
Intersection Capacity Utilization	72.3%	ICU Level of Service	C
Analysis Period (min)	15		

c Critical Lane Group

Movement	EBL	EBR	NBL	NBT	SBT	SBR
Lane Configurations						
Ideal Flow (vphpl)	1900	1900	1900	1900	1900	1900
Total Lost time (s)	4.0		4.0	4.0	4.0	
Lane Util. Factor	1.00		1.00	0.95	0.95	
Frt	0.91		1.00	1.00	0.98	
Flt Protected	0.98		0.95	1.00	1.00	
Satd. Flow (prot)	1669		1770	3539	3452	
Flt Permitted	0.98		0.95	1.00	1.00	
Satd. Flow (perm)	1669		1770	3539	3452	
Volume (vph)	63	119	114	558	597	117
Peak-hour factor, PHF	0.92	0.92	0.92	0.92	0.92	0.92
Adj. Flow (vph)	68	129	124	607	649	127
RTOR Reduction (vph)	108	0	0	0	11	0
Lane Group Flow (vph)	89	0	124	607	765	0
Turn Type			Prot			
Protected Phases	2		3	8	4	
Permitted Phases						
Actuated Green, G (s)	9.5		9.7	67.5	53.8	
Effective Green, g (s)	9.5		9.7	67.5	53.8	
Actuated g/C Ratio	0.11		0.11	0.79	0.63	
Clearance Time (s)	4.0		4.0	4.0	4.0	
Vehicle Extension (s)	3.0		3.0	3.0	3.0	
Lane Grp Cap (vph)	187		202	2810	2185	
v/s Ratio Prot	c0.05		c0.07	0.17	c0.22	
v/s Ratio Perm						
v/c Ratio	0.47		0.61	0.22	0.35	
Uniform Delay, d1	35.4		35.9	2.2	7.4	
Progression Factor	1.00		1.12	0.59	0.82	
Incremental Delay, d2	1.9		5.2	0.2	0.4	
Delay (s)	37.3		45.4	1.5	6.5	
Level of Service	D		D	A	A	
Approach Delay (s)	37.3			8.9	6.5	
Approach LOS	D			A	A	

Intersection Summary			
HCM Average Control Delay	11.1	HCM Level of Service	B
HCM Volume to Capacity ratio	0.40		
Actuated Cycle Length (s)	85.0	Sum of lost time (s)	12.0
Intersection Capacity Utilization	47.4%	ICU Level of Service	A
Analysis Period (min)	15		

c Critical Lane Group

Movement	EBL	EBT	EBR	WBL	WBT	WBR	NBL	NBT	NBR	SBL	SBT	SBR
Lane Configurations												
Ideal Flow (vphpl)	1900	1900	1900	1900	1900	1900	1900	1900	1900	1900	1900	1900
Lane Width	12	12	12	12	12	12	16	16	16	16	16	16
Total Lost time (s)	4.0	4.0		4.0	4.0		2.0	2.0		2.0	2.0	
Lane Util. Factor	1.00	0.91		1.00	0.91		1.00	1.00		1.00	1.00	
Frpb, ped/bikes	1.00	0.99		1.00	1.00		1.00	0.99		1.00	0.98	
Flpb, ped/bikes	1.00	1.00		1.00	1.00		1.00	1.00		0.98	1.00	
Frt	1.00	0.98		1.00	0.98		1.00	0.96		1.00	0.93	
Flt Protected	0.95	1.00		0.95	1.00		0.95	1.00		0.95	1.00	
Satd. Flow (prot)	1770	4934		1770	4971		2005	2004		1960	1918	
Flt Permitted	0.95	1.00		0.95	1.00		0.13	1.00		0.56	1.00	
Satd. Flow (perm)	1770	4934		1770	4971		279	2004		1156	1918	
Volume (vph)	322	1228	173	80	958	138	165	237	79	133	264	259
Peak-hour factor, PHF	0.95	0.95	0.95	0.95	0.95	0.95	0.95	0.95	0.95	0.95	0.95	0.95
Adj. Flow (vph)	339	1293	182	84	1008	145	174	249	83	140	278	273
RTOR Reduction (vph)	0	18	0	0	19	0	0	14	0	0	40	0
Lane Group Flow (vph)	339	1457	0	84	1134	0	174	318	0	140	511	0
Confl. Peds. (#/hr)			32	32		4	12		24	24		12
Parking (#/hr)												0
Turn Type	Prot			Prot			pm+pt			Perm		
Protected Phases	7	4		3	8		5	2			6	
Permitted Phases							2			6		
Actuated Green, G (s)	18.0	38.3		5.9	26.2		38.8	38.8		27.8	27.8	
Effective Green, g (s)	18.0	38.3		5.9	26.2		39.3	39.3		28.3	28.3	
Actuated g/C Ratio	0.19	0.41		0.06	0.28		0.42	0.42		0.30	0.30	
Clearance Time (s)	4.0	4.0		4.0	4.0		4.0	2.5		2.5	2.5	
Vehicle Extension (s)	3.0	3.0		3.0	3.0		3.0	3.0		3.0	3.0	
Lane Grp Cap (vph)	341	2021		112	1393		283	842		350	581	
v/s Ratio Prot	c0.19	0.30		0.05	c0.23		c0.06	0.16			c0.27	
v/s Ratio Perm							0.20			0.12		
v/c Ratio	0.99	0.72		0.75	0.81		0.61	0.38		0.40	0.88	
Uniform Delay, d1	37.7	23.1		43.1	31.4		21.8	18.7		25.9	31.0	
Progression Factor	1.00	1.00		1.00	1.00		1.00	1.00		1.00	1.00	
Incremental Delay, d2	46.9	2.3		24.2	5.3		3.9	0.3		0.8	14.2	
Delay (s)	84.6	25.4		67.3	36.7		25.7	19.0		26.6	45.2	
Level of Service	F	C		E	D		C	B		C	D	
Approach Delay (s)		36.4			38.8			21.3			41.5	
Approach LOS		D			D			C			D	

Intersection Summary			
HCM Average Control Delay	36.1	HCM Level of Service	D
HCM Volume to Capacity ratio	0.85		
Actuated Cycle Length (s)	93.5	Sum of lost time (s)	12.0
Intersection Capacity Utilization	92.3%	ICU Level of Service	F
Analysis Period (min)	15		

c Critical Lane Group

Movement	EBL	EBT	EBR	WBL	WBT	WBR	NBL	NBT	NBR	SBL	SBT	SBR
Lane Configurations												
Ideal Flow (vphpl)	1900	1900	1900	1900	1900	1900	1900	1900	1900	1900	1900	1900
Total Lost time (s)		4.0		4.0	4.0			4.0		4.0	4.0	
Lane Util. Factor		1.00		0.95	0.95			0.95		1.00	0.95	
Frpb, ped/bikes		1.00		1.00	0.92			0.94		1.00	0.90	
Flpb, ped/bikes		1.00		1.00	1.00			1.00		1.00	1.00	
Frt		0.92		1.00	0.92			0.97		1.00	0.95	
Flt Protected		0.98		0.95	1.00			1.00		0.95	1.00	
Satd. Flow (prot)		1688		1681	1494			3199		1770	3036	
Flt Permitted		0.48		0.73	1.00			0.94		0.95	1.00	
Satd. Flow (perm)		823		1296	1494			3012		1770	3036	
Volume (vph)	12	3	21	104	102	118	10	1006	288	98	800	398
Peak-hour factor, PHF	0.95	0.95	0.95	0.95	0.95	0.95	0.95	0.95	0.95	0.95	0.95	0.95
Adj. Flow (vph)	13	3	22	109	107	124	11	1059	303	103	842	419
RTOR Reduction (vph)	0	21	0	0	45	0	0	20	0	0	47	0
Lane Group Flow (vph)	0	17	0	109	186	0	0	1353	0	103	1214	0
Confl. Peds. (#/hr)						100	100		100			100
Turn Type	Perm			Perm			Perm			Prot		
Protected Phases		7			8			2		1	6	
Permitted Phases	7			8			2					
Actuated Green, G (s)		5.1		15.8	15.8			52.4		8.7	65.6	
Effective Green, g (s)		5.6		16.3	16.3			52.9		9.2	66.1	
Actuated g/C Ratio		0.06		0.16	0.16			0.53		0.09	0.66	
Clearance Time (s)		4.5		4.5	4.5			4.5		4.5	4.5	
Vehicle Extension (s)		2.0		2.0	2.0			2.0		2.0	2.0	
Lane Grp Cap (vph)		46		211	244			1593		163	2007	
v/s Ratio Prot										0.06	c0.40	
v/s Ratio Perm		c0.02		0.08	0.12			c0.45				
v/c Ratio		0.37		0.52	0.76			0.85		0.63	0.60	
Uniform Delay, d1		45.5		38.2	40.0			20.1		43.8	9.6	
Progression Factor		1.00		1.00	1.00			0.79		1.00	1.00	
Incremental Delay, d2		1.9		0.9	11.9			3.2		5.8	1.4	
Delay (s)		47.4		39.1	51.9			19.0		49.5	10.9	
Level of Service		D		D	D			B		D	B	
Approach Delay (s)		47.4			47.8			19.0			13.8	
Approach LOS		D			D			B			B	

Intersection Summary			
HCM Average Control Delay	20.2	HCM Level of Service	C
HCM Volume to Capacity ratio	0.78		
Actuated Cycle Length (s)	100.0	Sum of lost time (s)	16.0
Intersection Capacity Utilization	102.8%	ICU Level of Service	G
Analysis Period (min)	15		

c Critical Lane Group

Movement	EBL	EBT	EBR	WBL	WBT	WBR	NBL	NBT	NBR	SBL	SBT	SBR
Lane Configurations												
Ideal Flow (vphpl)	1900	1900	1900	1900	1900	1900	1900	1900	1900	1900	1900	1900
Total Lost time (s)	4.0	4.0		4.0	4.0		4.0	4.0		4.0	4.0	
Lane Util. Factor	0.97	0.95		1.00	0.95		1.00	0.95		1.00	0.95	
Frpb, ped/bikes	1.00	0.98		1.00	0.95		1.00	0.97		1.00	0.98	
Flpb, ped/bikes	1.00	1.00		1.00	1.00		1.00	1.00		1.00	1.00	
Frt	1.00	0.99		1.00	0.95		1.00	0.97		1.00	0.99	
Flt Protected	0.95	1.00		0.95	1.00		0.95	1.00		0.95	1.00	
Satd. Flow (prot)	3433	3429		1770	3221		1770	3360		1770	3434	
Flt Permitted	0.95	1.00		0.95	1.00		0.95	1.00		0.95	1.00	
Satd. Flow (perm)	3433	3429		1770	3221		1770	3360		1770	3434	
Volume (vph)	508	822	71	93	468	212	69	606	127	203	676	56
Peak-hour factor, PHF	0.95	0.95	0.95	0.95	0.95	0.95	0.95	0.95	0.95	0.95	0.95	0.95
Adj. Flow (vph)	535	865	75	98	493	223	73	638	134	214	712	59
RTOR Reduction (vph)	0	6	0	0	52	0	0	18	0	0	6	0
Lane Group Flow (vph)	535	934	0	98	664	0	73	754	0	214	765	0
Confl. Peds. (#/hr)			100			100			100			100
Turn Type	Prot			Prot			Prot			Prot		
Protected Phases	7	4		3	8		5	2		1	6	
Permitted Phases												
Actuated Green, G (s)	16.0	30.5		8.0	22.5		5.0	32.5		12.0	39.5	
Effective Green, g (s)	15.5	31.5		7.5	23.5		4.5	33.5		11.5	40.5	
Actuated g/C Ratio	0.16	0.32		0.08	0.24		0.04	0.34		0.12	0.40	
Clearance Time (s)	3.5	5.0		3.5	5.0		3.5	5.0		3.5	5.0	
Vehicle Extension (s)	2.0	2.0		2.0	2.0		2.0	2.0		2.0	2.0	
Lane Grp Cap (vph)	532	1080		133	757		80	1126		204	1391	
v/s Ratio Prot	c0.16	c0.27		0.06	0.21		0.04	c0.22		c0.12	0.22	
v/s Ratio Perm												
v/c Ratio	1.01	0.86		0.74	0.88		0.91	0.67		1.05	0.55	
Uniform Delay, d1	42.2	32.2		45.3	36.9		47.6	28.5		44.2	22.8	
Progression Factor	1.00	1.00		1.00	1.00		1.00	1.00		1.16	0.79	
Incremental Delay, d2	40.4	7.1		16.6	10.9		70.5	3.2		70.4	1.3	
Delay (s)	82.7	39.4		61.9	47.7		118.0	31.7		121.9	19.3	
Level of Service	F	D		E	D		F	C		F	B	
Approach Delay (s)		55.1			49.4			39.1			41.6	
Approach LOS		E			D			D			D	

Intersection Summary			
HCM Average Control Delay	47.5	HCM Level of Service	D
HCM Volume to Capacity ratio	0.82		
Actuated Cycle Length (s)	100.0	Sum of lost time (s)	12.0
Intersection Capacity Utilization	82.5%	ICU Level of Service	E
Analysis Period (min)	15		

c Critical Lane Group

Movement	EBL	EBT	EBR	WBL	WBT	WBR	NBL	NBT	NBR	SBL	SBT	SBR
Lane Configurations												
Ideal Flow (vphpl)	1900	1900	1900	1900	1900	1900	1900	1900	1900	1900	1900	1900
Total Lost time (s)		4.0						4.0		4.0	4.0	
Lane Util. Factor		1.00						0.95		0.97	0.95	
Frt		0.86						0.93		1.00	0.97	
Flt Protected		1.00						1.00		0.95	1.00	
Satd. Flow (prot)		1611						3286		3433	3442	
Flt Permitted		1.00						0.95		0.95	1.00	
Satd. Flow (perm)		1611						3110		3433	3442	
Volume (vph)	0	0	6	0	0	0	10	289	267	1430	287	64
Peak-hour factor, PHF	0.92	0.92	0.92	0.92	0.92	0.92	0.92	0.92	0.92	0.92	0.92	0.92
Adj. Flow (vph)	0	0	7	0	0	0	11	314	290	1554	312	70
RTOR Reduction (vph)	0	7	0	0	0	0	0	21	0	0	0	0
Lane Group Flow (vph)	0	0	0	0	0	0	0	594	0	1554	382	0
Turn Type							Perm			Prot		
Protected Phases								2		1	6	
Permitted Phases							2					
Actuated Green, G (s)		0.0						13.0		29.0	50.0	
Effective Green, g (s)		0.0						13.0		29.0	50.0	
Actuated g/C Ratio		0.00						0.26		0.58	1.00	
Clearance Time (s)								4.0		4.0	2.0	
Lane Grp Cap (vph)		0						809		1991	3442	
v/s Ratio Prot										c0.45	0.11	
v/s Ratio Perm								c0.19				
v/c Ratio		0.00						0.73		0.78	0.11	
Uniform Delay, d1		25.0						16.9		8.1	0.0	
Progression Factor		1.00						0.75		1.00	1.00	
Incremental Delay, d2		0.0						5.6		3.1	0.1	
Delay (s)		25.0						18.2		11.2	0.1	
Level of Service		C						B		B	A	
Approach Delay (s)		25.0			0.0			18.2			9.0	
Approach LOS		C			A			B			A	

Intersection Summary			
HCM Average Control Delay	11.3	HCM Level of Service	B
HCM Volume to Capacity ratio	0.77		
Actuated Cycle Length (s)	50.0	Sum of lost time (s)	8.0
Intersection Capacity Utilization	71.0%	ICU Level of Service	C
Analysis Period (min)	15		

c Critical Lane Group

Movement	EBL	EBT	EBR	WBL	WBT	WBR	NBL	NBT	NBR	SBL	SBT	SBR
Lane Configurations												
Ideal Flow (vphpl)	1900	1900	1900	1900	1900	1900	1900	1900	1900	1900	1900	1900
Total Lost time (s)		4.0			4.0			4.0			4.0	
Lane Util. Factor		1.00			1.00			0.95			0.95	
Frpb, ped/bikes		0.95			0.97			0.99			0.99	
Flpb, ped/bikes		0.98			0.96			1.00			0.99	
Frt		0.96			0.96			0.98			0.99	
Flt Protected		0.98			0.99			1.00			0.99	
Satd. Flow (prot)		1643			1649			3406			3439	
Flt Permitted		0.88			0.91			0.94			0.85	
Satd. Flow (perm)		1471			1519			3197			2949	
Volume (vph)	26	27	21	48	72	50	20	434	66	43	263	20
Peak-hour factor, PHF	0.90	0.90	0.90	0.90	0.90	0.90	0.90	0.90	0.90	0.90	0.90	0.90
Adj. Flow (vph)	29	30	23	53	80	56	22	482	73	48	292	22
RTOR Reduction (vph)	0	15	0	0	30	0	0	23	0	0	10	0
Lane Group Flow (vph)	0	67	0	0	159	0	0	554	0	0	353	0
Confl. Peds. (#/hr)	100		100	100		100	100		100	100		100
Turn Type	Perm			Perm			Perm			Perm		
Protected Phases		4			8			2			6	
Permitted Phases	4			8			2			6		
Actuated Green, G (s)		17.0			17.0			25.0			25.0	
Effective Green, g (s)		17.0			17.0			25.0			25.0	
Actuated g/C Ratio		0.34			0.34			0.50			0.50	
Clearance Time (s)		4.0			4.0			4.0			4.0	
Lane Grp Cap (vph)		500			516			1599			1475	
v/s Ratio Prot												
v/s Ratio Perm		0.05			c0.10			c0.17			0.12	
v/c Ratio		0.13			0.31			0.35			0.24	
Uniform Delay, d1		11.4			12.2			7.6			7.1	
Progression Factor		1.00			1.00			1.00			1.00	
Incremental Delay, d2		0.6			1.5			0.6			0.4	
Delay (s)		12.0			13.7			8.2			7.5	
Level of Service		B			B			A			A	
Approach Delay (s)		12.0			13.7			8.2			7.5	
Approach LOS		B			B			A			A	

Intersection Summary			
HCM Average Control Delay	9.1	HCM Level of Service	A
HCM Volume to Capacity ratio	0.33		
Actuated Cycle Length (s)	50.0	Sum of lost time (s)	8.0
Intersection Capacity Utilization	62.8%	ICU Level of Service	B
Analysis Period (min)	15		
c Critical Lane Group			

Movement	EBL	EBT	EBR	WBL	WBT	WBR	NBL	NBT	NBR	SBL	SBT	SBR
Lane Configurations												
Ideal Flow (vphpl)	1900	1900	1900	1900	1900	1900	1900	1900	1900	1900	1900	1900
Total Lost time (s)		4.0			4.0			4.0			4.0	
Lane Util. Factor		1.00			1.00			0.95			0.91	
Frpb, ped/bikes		0.96			0.97			0.99			0.98	
Flpb, ped/bikes		0.97			0.98			1.00			1.00	
Frt		0.96			0.97			0.99			0.99	
Flt Protected		0.98			0.99			1.00			1.00	
Satd. Flow (prot)		1631			1679			3471			4925	
Flt Permitted		0.85			0.85			0.92			0.91	
Satd. Flow (perm)		1417			1446			3180			4483	
Volume (vph)	46	49	39	20	41	21	24	1061	42	18	914	67
Peak-hour factor, PHF	0.94	0.94	0.94	0.94	0.94	0.94	0.94	0.94	0.94	0.94	0.94	0.94
Adj. Flow (vph)	49	52	41	21	44	22	26	1129	45	19	972	71
RTOR Reduction (vph)	0	28	0	0	19	0	0	1	0	0	4	0
Lane Group Flow (vph)	0	114	0	0	68	0	0	1199	0	0	1058	0
Confl. Peds. (#/hr)	100		100	100		100	100		100	100		100
Turn Type	Perm			Perm			Perm			Perm		
Protected Phases		4			4			2			6	
Permitted Phases	4			4			2			6		
Actuated Green, G (s)		8.6			8.6			62.4			62.4	
Effective Green, g (s)		9.1			9.1			62.9			62.9	
Actuated g/C Ratio		0.11			0.11			0.79			0.79	
Clearance Time (s)		4.5			4.5			4.5			4.5	
Vehicle Extension (s)		2.0			2.0			2.0			2.0	
Lane Grp Cap (vph)		161			164			2500			3525	
v/s Ratio Prot												
v/s Ratio Perm		c0.08			0.05			c0.38			0.24	
v/c Ratio		0.71			0.41			0.48			0.30	
Uniform Delay, d1		34.2			33.0			2.9			2.4	
Progression Factor		1.00			1.00			1.00			1.00	
Incremental Delay, d2		10.9			0.6			0.7			0.2	
Delay (s)		45.1			33.6			3.6			2.6	
Level of Service		D			C			A			A	
Approach Delay (s)		45.1			33.6			3.6			2.6	
Approach LOS		D			C			A			A	

Intersection Summary			
HCM Average Control Delay	6.6	HCM Level of Service	A
HCM Volume to Capacity ratio	0.51		
Actuated Cycle Length (s)	80.0	Sum of lost time (s)	8.0
Intersection Capacity Utilization	82.2%	ICU Level of Service	E
Analysis Period (min)	15		
c Critical Lane Group			

Movement	EBL	EBT	EBR	WBL	WBT	WBR	NBL	NBT	NBR	SBL	SBT	SBR
Lane Configurations												
Ideal Flow (vphpl)	1900	1900	1900	1900	1900	1900	1900	1900	1900	1900	1900	1900
Total Lost time (s)	4.0	4.0		4.0	4.0		4.0	4.0		4.0	4.0	
Lane Util. Factor	1.00	0.95		1.00	0.95		1.00	1.00		1.00	1.00	
Frpb, ped/bikes	1.00	0.99		1.00	0.98		1.00	0.99		1.00	0.99	
Flpb, ped/bikes	0.96	1.00		0.98	1.00		0.96	1.00		0.97	1.00	
Frt	1.00	0.99		1.00	0.98		1.00	0.98		1.00	0.99	
Flt Protected	0.95	1.00		0.95	1.00		0.95	1.00		0.95	1.00	
Satd. Flow (prot)	1694	3486		1731	3401		1697	1822		1720	1830	
Flt Permitted	0.29	1.00		0.24	1.00		0.56	1.00		0.37	1.00	
Satd. Flow (perm)	511	3486		445	3401		992	1822		667	1830	
Volume (vph)	26	670	45	47	556	86	109	389	43	93	222	19
Peak-hour factor, PHF	0.92	0.92	0.92	0.92	0.92	0.92	0.92	0.92	0.92	0.92	0.92	0.92
Adj. Flow (vph)	28	728	49	51	604	93	118	423	47	101	241	21
RTOR Reduction (vph)	0	6	0	0	15	0	0	5	0	0	4	0
Lane Group Flow (vph)	28	771	0	51	682	0	118	465	0	101	258	0
Confl. Peds. (#/hr)	100		100	100		100	100		100	100		100
Turn Type	Perm			Perm			Perm			Perm		
Protected Phases		4			8			2			6	
Permitted Phases	4			8			2			6		
Actuated Green, G (s)	33.0	33.0		33.0	33.0		40.5	40.5		40.5	40.5	
Effective Green, g (s)	32.0	32.0		32.0	32.0		40.0	40.0		40.0	40.0	
Actuated g/C Ratio	0.40	0.40		0.40	0.40		0.50	0.50		0.50	0.50	
Clearance Time (s)	3.0	3.0		3.0	3.0		3.5	3.5		3.5	3.5	
Lane Grp Cap (vph)	204	1394		178	1360		496	911		334	915	
v/s Ratio Prot		c0.22			0.20			c0.26			0.14	
v/s Ratio Perm	0.05			0.11			0.12			0.15		
v/c Ratio	0.14	0.55		0.29	0.50		0.24	0.51		0.30	0.28	
Uniform Delay, d1	15.2	18.5		16.3	18.0		11.4	13.4		11.8	11.6	
Progression Factor	1.00	1.00		1.93	2.01		1.80	1.84		1.00	1.00	
Incremental Delay, d2	1.4	1.6		3.4	1.1		0.7	1.3		2.3	0.8	
Delay (s)	16.6	20.1		34.8	37.3		21.2	26.0		14.1	12.4	
Level of Service	B	C		C	D		C	C		B	B	
Approach Delay (s)		20.0			37.1			25.0			12.9	
Approach LOS		B			D			C			B	

Intersection Summary			
HCM Average Control Delay	25.3	HCM Level of Service	C
HCM Volume to Capacity ratio	0.53		
Actuated Cycle Length (s)	80.0	Sum of lost time (s)	8.0
Intersection Capacity Utilization	81.0%	ICU Level of Service	D
Analysis Period (min)	15		
c Critical Lane Group			

Movement	EBL	EBT	EBR	WBL	WBT	WBR	NBL	NBT	NBR	SBL	SBT	SBR
Lane Configurations												
Ideal Flow (vphpl)	1900	1900	1900	1900	1900	1900	1900	1900	1900	1900	1900	1900
Total Lost time (s)	4.0	4.0		4.0	4.0			4.0			4.0	
Lane Util. Factor	1.00	0.95		1.00	0.95			0.95			0.95	
Frpb, ped/bikes	1.00	0.99		1.00	0.99			0.99			0.99	
Flpb, ped/bikes	0.97	1.00		0.98	1.00			0.99			1.00	
Frt	1.00	0.99		1.00	0.99			0.98			0.97	
Flt Protected	0.95	1.00		0.95	1.00			0.99			0.99	
Satd. Flow (prot)	1712	3470		1730	3488			3345			3337	
Flt Permitted	0.24	1.00		0.16	1.00			0.84			0.91	
Satd. Flow (perm)	428	3470		291	3488			2860			3042	
Volume (vph)	26	767	60	34	630	36	74	167	44	19	96	33
Peak-hour factor, PHF	0.97	0.97	0.97	0.97	0.97	0.97	0.97	0.97	0.97	0.97	0.97	0.97
Adj. Flow (vph)	27	791	62	35	649	37	76	172	45	20	99	34
RTOR Reduction (vph)	0	7	0	0	5	0	0	6	0	0	11	0
Lane Group Flow (vph)	27	846	0	35	681	0	0	287	0	0	142	0
Confl. Peds. (#/hr)	100		100	100		100	100		100	100		100
Turn Type	Perm			Perm			Perm			Perm		
Protected Phases		4			8			2			6	
Permitted Phases	4			8			2			6		
Actuated Green, G (s)	24.0	24.0		24.0	24.0			46.0			46.0	
Effective Green, g (s)	25.0	25.0		25.0	25.0			47.0			47.0	
Actuated g/C Ratio	0.31	0.31		0.31	0.31			0.59			0.59	
Clearance Time (s)	5.0	5.0		5.0	5.0			5.0			5.0	
Lane Grp Cap (vph)	134	1084		91	1090			1680			1787	
v/s Ratio Prot		c0.24			0.20							
v/s Ratio Perm	0.06			0.12				c0.10			0.05	
v/c Ratio	0.20	0.78		0.38	0.62			0.17			0.08	
Uniform Delay, d1	20.2	25.0		21.5	23.5			7.6			7.1	
Progression Factor	0.45	0.50		0.91	0.95			1.26			1.00	
Incremental Delay, d2	2.9	4.9		10.5	2.4			0.2			0.1	
Delay (s)	12.1	17.2		30.1	24.7			9.7			7.2	
Level of Service	B	B		C	C			A			A	
Approach Delay (s)		17.1			24.9			9.7			7.2	
Approach LOS		B			C			A			A	

Intersection Summary			
HCM Average Control Delay	18.1	HCM Level of Service	B
HCM Volume to Capacity ratio	0.38		
Actuated Cycle Length (s)	80.0	Sum of lost time (s)	8.0
Intersection Capacity Utilization	64.9%	ICU Level of Service	C
Analysis Period (min)	15		
c Critical Lane Group			

Movement	EBL	EBT	EBR	WBL	WBT	WBR	NBL	NBT	NBR	SBL	SBT	SBR
Lane Configurations												
Ideal Flow (vphpl)	1900	1900	1900	1900	1900	1900	1900	1900	1900	1900	1900	1900
Total Lost time (s)	4.0	4.0		4.0	4.0			4.0			4.0	
Lane Util. Factor	1.00	0.95		1.00	0.95			0.95			0.95	
Frpb, ped/bikes	1.00	1.00		1.00	0.99			0.99			1.00	
Flpb, ped/bikes	1.00	1.00		0.99	1.00			1.00			1.00	
Frt	1.00	0.99		1.00	0.97			0.96			0.98	
Flt Protected	0.95	1.00		0.95	1.00			0.99			0.99	
Satd. Flow (prot)	1765	3482		1757	3424			3356			3433	
Flt Permitted	0.25	1.00		0.24	1.00			0.88			0.79	
Satd. Flow (perm)	472	3482		443	3424			2955			2726	
Volume (vph)	51	748	70	111	644	144	53	273	115	75	219	38
Peak-hour factor, PHF	0.99	0.99	0.99	0.99	0.99	0.99	0.99	0.99	0.99	0.99	0.99	0.99
Adj. Flow (vph)	52	756	71	112	651	145	54	276	116	76	221	38
RTOR Reduction (vph)	0	9	0	0	24	0	0	44	0	0	12	0
Lane Group Flow (vph)	52	818	0	112	772	0	0	402	0	0	323	0
Confl. Peds. (#/hr)	8		39	39		8			25	25		
Turn Type	Perm			Perm			Perm			Perm		
Protected Phases		4			8			2			6	
Permitted Phases	4			8			2			6		
Actuated Green, G (s)	35.5	35.5		35.5	35.5			38.0			38.0	
Effective Green, g (s)	35.0	35.0		35.0	35.0			37.0			37.0	
Actuated g/C Ratio	0.44	0.44		0.44	0.44			0.46			0.46	
Clearance Time (s)	3.5	3.5		3.5	3.5			3.0			3.0	
Lane Grp Cap (vph)	207	1523		194	1498			1367			1261	
v/s Ratio Prot		0.23			0.23							
v/s Ratio Perm	0.11			c0.25				c0.14			0.12	
v/c Ratio	0.25	0.54		0.58	0.52			0.29			0.26	
Uniform Delay, d1	14.2	16.5		16.9	16.3			13.4			13.1	
Progression Factor	0.95	1.07		1.29	1.35			0.82			1.00	
Incremental Delay, d2	2.0	0.9		11.4	1.2			0.5			0.5	
Delay (s)	15.5	18.7		33.3	23.2			11.5			13.6	
Level of Service	B	B		C	C			B			B	
Approach Delay (s)		18.5			24.5			11.5			13.6	
Approach LOS		B			C			B			B	

Intersection Summary			
HCM Average Control Delay	18.8	HCM Level of Service	B
HCM Volume to Capacity ratio	0.43		
Actuated Cycle Length (s)	80.0	Sum of lost time (s)	8.0
Intersection Capacity Utilization	87.3%	ICU Level of Service	E
Analysis Period (min)	15		
c Critical Lane Group			

Movement	EBT	EBR	WBL	WBT	NBL	NBR
Lane Configurations						
Ideal Flow (vphpl)	1900	1900	1900	1900	1900	1900
Total Lost time (s)	4.0		4.0	4.0	4.0	4.0
Lane Util. Factor	0.95		1.00	0.95	1.00	1.00
Frpb, ped/bikes	0.94		1.00	1.00	1.00	1.00
Flpb, ped/bikes	1.00		1.00	1.00	1.00	1.00
Frt	0.98		1.00	1.00	1.00	0.85
Flt Protected	1.00		0.95	1.00	0.95	1.00
Satd. Flow (prot)	3268		1770	3539	1770	1583
Flt Permitted	1.00		0.95	1.00	0.95	1.00
Satd. Flow (perm)	3268		1770	3539	1770	1583
Volume (vph)	840	105	51	737	165	66
Peak-hour factor, PHF	0.97	0.97	0.97	0.97	0.97	0.97
Adj. Flow (vph)	866	108	53	760	170	68
RTOR Reduction (vph)	0	0	0	0	0	0
Lane Group Flow (vph)	974	0	53	760	170	68
Confl. Peds. (#/hr)		213	348			
Turn Type			Prot			Perm
Protected Phases	4		3	8	2	
Permitted Phases						2
Actuated Green, G (s)	50.0		5.4	59.4	12.6	12.6
Effective Green, g (s)	50.0		5.4	59.4	12.6	12.6
Actuated g/C Ratio	0.62		0.07	0.74	0.16	0.16
Clearance Time (s)	4.0		4.0	4.0	4.0	4.0
Vehicle Extension (s)	3.0		3.0	3.0	3.0	3.0
Lane Grp Cap (vph)	2043		119	2628	279	249
v/s Ratio Prot	c0.30		c0.03	0.21	c0.10	
v/s Ratio Perm						0.04
v/c Ratio	0.48		0.45	0.29	0.61	0.27
Uniform Delay, d1	8.0		35.9	3.4	31.4	29.7
Progression Factor	0.38		0.99	0.89	0.91	0.90
Incremental Delay, d2	0.7		2.2	0.2	3.7	0.6
Delay (s)	3.7		37.7	3.2	32.3	27.4
Level of Service	A		D	A	C	C
Approach Delay (s)	3.7			5.5	30.9	
Approach LOS	A			A	C	

Intersection Summary			
HCM Average Control Delay	7.6	HCM Level of Service	A
HCM Volume to Capacity ratio	0.50		
Actuated Cycle Length (s)	80.0	Sum of lost time (s)	12.0
Intersection Capacity Utilization	49.9%	ICU Level of Service	A
Analysis Period (min)	15		
c Critical Lane Group			

Movement	EBL	EBT	EBR	WBL	WBT	WBR	NBL	NBT	NBR	SBL	SBT	SBR
Lane Configurations												
Ideal Flow (vphpl)	1900	1900	1900	1900	1900	1900	1900	1900	1900	1900	1900	1900
Total Lost time (s)	4.0	4.0		4.0	4.0		4.0	4.0		4.0	4.0	
Lane Util. Factor	1.00	0.95		1.00	0.95		1.00	0.95		1.00	0.95	
Frpb, ped/bikes	1.00	0.99		1.00	0.97		1.00	0.99		1.00	0.98	
Flpb, ped/bikes	0.93	1.00		0.98	1.00		1.00	1.00		1.00	1.00	
Frt	1.00	0.98		1.00	0.98		1.00	0.99		1.00	0.97	
Flt Protected	0.95	1.00		0.95	1.00		0.95	1.00		0.95	1.00	
Satd. Flow (prot)	1642	3422		1728	3366		1770	3467		1770	3361	
Flt Permitted	0.33	1.00		0.18	1.00		0.95	1.00		0.95	1.00	
Satd. Flow (perm)	564	3422		324	3366		1770	3467		1770	3361	
Volume (vph)	128	679	99	37	471	76	186	890	82	103	614	136
Peak-hour factor, PHF	0.98	0.98	0.98	0.98	0.98	0.98	0.98	0.98	0.98	0.98	0.98	0.98
Adj. Flow (vph)	131	693	101	38	481	78	190	908	84	105	627	139
RTOR Reduction (vph)	0	14	0	0	16	0	0	7	0	0	22	0
Lane Group Flow (vph)	131	780	0	38	543	0	190	985	0	105	744	0
Confl. Peds. (#/hr)	94		86	86		94			40			111
Turn Type	Perm			Perm			Prot			Prot		
Protected Phases		4			8		5	2		1	6	
Permitted Phases	4			8								
Actuated Green, G (s)	24.9	24.9		24.9	24.9		10.8	33.7		7.9	30.8	
Effective Green, g (s)	25.4	25.4		25.4	25.4		11.3	34.2		8.4	31.3	
Actuated g/C Ratio	0.32	0.32		0.32	0.32		0.14	0.43		0.11	0.39	
Clearance Time (s)	4.5	4.5		4.5	4.5		4.5	4.5		4.5	4.5	
Vehicle Extension (s)	2.0	2.0		2.0	2.0		2.0	2.0		2.0	2.0	
Lane Grp Cap (vph)	179	1086		103	1069		250	1482		186	1315	
v/s Ratio Prot		0.23			0.16		c0.11	c0.28		0.06	0.22	
v/s Ratio Perm	c0.23			0.12								
v/c Ratio	0.73	0.72		0.37	0.51		0.76	0.66		0.56	0.57	
Uniform Delay, d1	24.3	24.1		21.1	22.2		33.0	18.3		34.1	19.0	
Progression Factor	0.69	0.64		1.00	1.00		0.99	0.53		1.00	1.00	
Incremental Delay, d2	11.4	1.7		0.8	0.1		10.1	2.0		2.3	1.8	
Delay (s)	28.2	17.3		21.9	22.4		42.8	11.7		36.4	20.8	
Level of Service	C	B		C	C		D	B		D	C	
Approach Delay (s)		18.8			22.3			16.7			22.7	
Approach LOS		B			C			B			C	

Intersection Summary			
HCM Average Control Delay	19.6	HCM Level of Service	B
HCM Volume to Capacity ratio	0.72		
Actuated Cycle Length (s)	80.0	Sum of lost time (s)	12.0
Intersection Capacity Utilization	73.3%	ICU Level of Service	D
Analysis Period (min)	15		

c Critical Lane Group

Movement	WBL	WBR	NBT	NBR	SBL	SBT
Lane Configurations						
Sign Control	Stop		Free			Free
Grade	0%		0%			0%
Volume (veh/h)	7	33	1118	31	15	783
Peak Hour Factor	0.90	0.90	0.90	0.90	0.90	0.90
Hourly flow rate (vph)	8	37	1242	34	17	870
Pedestrians	52		52			45
Lane Width (ft)	12.0		12.0			12.0
Walking Speed (ft/s)	4.0		4.0			4.0
Percent Blockage	4		4			4
Right turn flare (veh)						
Median type	None					
Median storage veh)						
Upstream signal (ft)			230			503
pX, platoon unblocked	0.94	0.88			0.88	
vC, conflicting volume	1832	735			1329	
vC1, stage 1 conf vol						
vC2, stage 2 conf vol						
vCu, unblocked vol	1453	564			1238	
tC, single (s)	6.8	6.9			4.1	
tC, 2 stage (s)						
tF (s)	3.5	3.3			2.2	
p0 queue free %	92	90			96	
cM capacity (veh/h)	100	380			471	

Direction, Lane #	WB 1	NB 1	NB 2	SB 1	SB 2	SB 3
Volume Total	44	828	449	17	435	435
Volume Left	8	0	0	17	0	0
Volume Right	37	0	34	0	0	0
cSH	255	1700	1700	471	1700	1700
Volume to Capacity	0.17	0.49	0.26	0.04	0.26	0.26
Queue Length 95th (ft)	15	0	0	3	0	0
Control Delay (s)	22.0	0.0	0.0	12.9	0.0	0.0
Lane LOS	C			B		
Approach Delay (s)	22.0	0.0		0.2		
Approach LOS	C					

Intersection Summary			
Average Delay	0.5		
Intersection Capacity Utilization	50.2%	ICU Level of Service	A
Analysis Period (min)	15		

Movement	EBL	EBT	EBR	WBL	WBT	WBR	NBL	NBT	NBR	SBL	SBT	SBR
Lane Configurations												
Ideal Flow (vphpl)	1900	1900	1900	1900	1900	1900	1900	1900	1900	1900	1900	1900
Total Lost time (s)		4.0		4.0	4.0			4.0		4.0	4.0	
Lane Util. Factor		0.91		1.00	0.95			1.00		1.00	1.00	
Frpb, ped/bikes		1.00		1.00	0.98			0.98		1.00	0.99	
Flpb, ped/bikes		1.00		0.97	1.00			0.99		0.97	1.00	
Frt		0.99		1.00	0.95			0.98		1.00	0.99	
Flt Protected		0.99		0.95	1.00			0.99		0.95	1.00	
Satd. Flow (prot)		4984		1719	3291			1766		1714	1832	
Flt Permitted		0.79		0.33	1.00			0.81		0.27	1.00	
Satd. Flow (perm)		3989		592	3291			1440		482	1832	
Volume (vph)	112	627	27	66	333	168	58	364	84	65	291	20
Peak-hour factor, PHF	0.98	0.98	0.98	0.98	0.98	0.98	0.98	0.98	0.98	0.98	0.98	0.98
Adj. Flow (vph)	114	640	28	67	340	171	59	371	86	66	297	20
RTOR Reduction (vph)	0	5	0	0	38	0	0	9	0	0	3	0
Lane Group Flow (vph)	0	777	0	67	473	0	0	507	0	66	314	0
Confl. Peds. (#/hr)	100		100	100		100	100		100	100		100
Turn Type	Perm			Perm			Perm			Perm		
Protected Phases		4			8			2			6	
Permitted Phases	4			8			2			6		
Actuated Green, G (s)		46.0		46.0	46.0			24.0		24.0	24.0	
Effective Green, g (s)		47.0		47.0	47.0			25.0		25.0	25.0	
Actuated g/C Ratio		0.59		0.59	0.59			0.31		0.31	0.31	
Clearance Time (s)		5.0		5.0	5.0			5.0		5.0	5.0	
Lane Grp Cap (vph)		2344		348	1933			450		151	573	
v/s Ratio Prot					0.14						0.17	
v/s Ratio Perm		c0.19		0.11				c0.35		0.14		
v/c Ratio		0.33		0.19	0.24			1.13		0.44	0.55	
Uniform Delay, d1		8.5		7.7	7.9			27.5		21.9	22.8	
Progression Factor		1.00		1.36	1.38			1.00		0.75	0.75	
Incremental Delay, d2		0.4		1.2	0.3			81.8		8.7	3.6	
Delay (s)		8.8		11.7	11.2			109.3		25.2	20.8	
Level of Service		A		B	B			F		C	C	
Approach Delay (s)		8.8			11.3			109.3			21.5	
Approach LOS		A			B			F			C	

Intersection Summary			
HCM Average Control Delay	34.6	HCM Level of Service	C
HCM Volume to Capacity ratio	0.61		
Actuated Cycle Length (s)	80.0	Sum of lost time (s)	8.0
Intersection Capacity Utilization	138.5%	ICU Level of Service	H
Analysis Period (min)	15		
c Critical Lane Group			

Movement	EBL	EBT	EBR	WBL	WBT	WBR	NBL	NBT	NBR	SBL	SBT	SBR
Lane Configurations												
Ideal Flow (vphpl)	1900	1900	1900	1900	1900	1900	1900	1900	1900	1900	1900	1900
Total Lost time (s)		4.0			4.0		4.0	4.0		4.0	4.0	
Lane Util. Factor		0.91			0.91		1.00	1.00		1.00	1.00	
Frpb, ped/bikes		0.99			0.99		1.00	0.97		1.00	0.98	
Flpb, ped/bikes		1.00			0.99		0.91	1.00		0.94	1.00	
Frt		0.99			0.98		1.00	0.96		1.00	0.98	
Flt Protected		1.00			0.99		0.95	1.00		0.95	1.00	
Satd. Flow (prot)		4969			4881		1608	1734		1658	1802	
Flt Permitted		0.88			0.80		0.61	1.00		0.36	1.00	
Satd. Flow (perm)		4391			3928		1040	1734		631	1802	
Volume (vph)	39	567	40	70	412	66	41	210	71	56	126	17
Peak-hour factor, PHF	0.95	0.95	0.95	0.95	0.95	0.95	0.95	0.95	0.95	0.95	0.95	0.95
Adj. Flow (vph)	41	597	42	74	434	69	43	221	75	59	133	18
RTOR Reduction (vph)	0	9	0	0	22	0	0	16	0	0	6	0
Lane Group Flow (vph)	0	671	0	0	555	0	43	280	0	59	145	0
Confl. Peds. (#/hr)	100		100	100		100	100		100	100		100
Turn Type	Perm			Perm			Perm			Perm		
Protected Phases		4			8			2			6	
Permitted Phases	4			8			2			6		
Actuated Green, G (s)		51.5			51.5		20.5	20.5		20.5	20.5	
Effective Green, g (s)		51.5			51.5		20.5	20.5		20.5	20.5	
Actuated g/C Ratio		0.64			0.64		0.26	0.26		0.26	0.26	
Clearance Time (s)		4.0			4.0		4.0	4.0		4.0	4.0	
Lane Grp Cap (vph)		2827			2529		267	444		162	462	
v/s Ratio Prot								c0.16			0.08	
v/s Ratio Perm		c0.15			0.14		0.04			0.09		
v/c Ratio		0.24			0.22		0.16	0.63		0.36	0.31	
Uniform Delay, d1		6.0			5.9		23.1	26.4		24.4	24.1	
Progression Factor		1.25			1.20		1.00	1.00		1.21	1.23	
Incremental Delay, d2		0.2			0.2		1.3	6.7		6.0	1.7	
Delay (s)		7.7			7.3		24.4	33.1		35.5	31.3	
Level of Service		A			A		C	C		D	C	
Approach Delay (s)		7.7			7.3			32.0			32.5	
Approach LOS		A			A			C			C	

Intersection Summary			
HCM Average Control Delay	15.0	HCM Level of Service	B
HCM Volume to Capacity ratio	0.35		
Actuated Cycle Length (s)	80.0	Sum of lost time (s)	8.0
Intersection Capacity Utilization	86.9%	ICU Level of Service	E
Analysis Period (min)	15		
c Critical Lane Group			

Movement	EBL	EBT	EBR	WBL	WBT	WBR	NBL	NBT	NBR	SBL	SBT	SBR
Lane Configurations												
Ideal Flow (vphpl)	1900	1900	1900	1900	1900	1900	1900	1900	1900	1900	1900	1900
Total Lost time (s)		4.0			4.0			4.0			4.0	
Lane Util. Factor		0.91			0.91			0.95			0.95	
Frpb, ped/bikes		1.00			1.00			0.99			1.00	
Flpb, ped/bikes		1.00			1.00			1.00			1.00	
Frt		0.99			0.96			0.96			0.98	
Flt Protected		1.00			1.00			0.99			0.99	
Satd. Flow (prot)		5019			4824			3363			3379	
Flt Permitted		0.83			0.85			0.86			0.73	
Satd. Flow (perm)		4205			4098			2899			2510	
Volume (vph)	60	620	34	50	434	195	39	182	72	121	217	66
Peak-hour factor, PHF	0.99	0.99	0.99	0.99	0.99	0.99	0.99	0.99	0.99	0.99	0.99	0.99
Adj. Flow (vph)	61	626	34	51	438	197	39	184	73	122	219	67
RTOR Reduction (vph)	0	7	0	0	70	0	0	39	0	0	20	0
Lane Group Flow (vph)	0	714	0	0	616	0	0	257	0	0	388	0
Confl. Peds. (#/hr)	9		17	17		9	12		10	10		12
Turn Type	Perm			Perm			Perm			Perm		
Protected Phases		4			8			2			6	
Permitted Phases	4			8			2			6		
Actuated Green, G (s)		50.0			50.0			19.0			19.0	
Effective Green, g (s)		51.5			51.5			20.5			20.5	
Actuated g/C Ratio		0.64			0.64			0.26			0.26	
Clearance Time (s)		5.5			5.5			5.5			5.5	
Lane Grp Cap (vph)		2707			2638			743			643	
v/s Ratio Prot												
v/s Ratio Perm		c0.17			0.15			0.09			c0.15	
v/c Ratio		0.26			0.23			0.35			0.60	
Uniform Delay, d1		6.1			6.0			24.3			26.2	
Progression Factor		1.49			1.16			1.00			0.77	
Incremental Delay, d2		0.2			0.2			1.3			4.1	
Delay (s)		9.3			7.1			25.5			24.2	
Level of Service		A			A			C			C	
Approach Delay (s)		9.3			7.1			25.5			24.2	
Approach LOS		A			A			C			C	

Intersection Summary			
HCM Average Control Delay	13.8	HCM Level of Service	B
HCM Volume to Capacity ratio	0.36		
Actuated Cycle Length (s)	80.0	Sum of lost time (s)	8.0
Intersection Capacity Utilization	93.7%	ICU Level of Service	F
Analysis Period (min)	15		
c Critical Lane Group			

Movement	EBL	EBT	EBR	WBL	WBT	WBR	NBL	NBT	NBR	SBL	SBT	SBR
Lane Configurations												
Ideal Flow (vphpl)	1900	1900	1900	1900	1900	1900	1900	1900	1900	1900	1900	1900
Total Lost time (s)		4.0			4.0			4.0			4.0	
Lane Util. Factor		0.91			0.91			1.00			1.00	
Frpb, ped/bikes		1.00			0.99			1.00			0.95	
Flpb, ped/bikes		1.00			1.00			1.00			1.00	
Frt		1.00			0.98			0.93			0.92	
Flt Protected		1.00			1.00			0.98			0.98	
Satd. Flow (prot)		5052			4964			1695			1601	
Flt Permitted		0.83			0.92			0.85			0.86	
Satd. Flow (perm)		4203			4584			1476			1408	
Volume (vph)	80	761	10	10	489	57	10	0	10	128	0	193
Peak-hour factor, PHF	0.96	0.96	0.92	0.92	0.96	0.96	0.92	0.92	0.92	0.96	0.92	0.96
Adj. Flow (vph)	83	793	11	11	509	59	11	0	11	133	0	201
RTOR Reduction (vph)	0	1	0	0	0	0	0	8	0	0	0	0
Lane Group Flow (vph)	0	886	0	0	579	0	0	14	0	0	334	0
Confl. Peds. (#/hr)						79						79
Turn Type	Perm			Perm			Perm			Perm		
Protected Phases		4			8			2			6	
Permitted Phases	4			8			2			6		
Actuated Green, G (s)		48.2			48.2			23.8			23.8	
Effective Green, g (s)		48.2			48.2			23.8			23.8	
Actuated g/C Ratio		0.60			0.60			0.30			0.30	
Clearance Time (s)		4.0			4.0			4.0			4.0	
Vehicle Extension (s)		3.0			3.0			3.0			3.0	
Lane Grp Cap (vph)		2532			2762			439			419	
v/s Ratio Prot												
v/s Ratio Perm		c0.21			0.13			0.01			c0.24	
v/c Ratio		0.35			0.21			0.03			0.80	
Uniform Delay, d1		8.0			7.2			19.9			25.9	
Progression Factor		0.65			1.00			1.00			0.81	
Incremental Delay, d2		0.4			0.2			0.0			10.0	
Delay (s)		5.5			7.4			20.0			30.9	
Level of Service		A			A			B			C	
Approach Delay (s)		5.5			7.4			20.0			30.9	
Approach LOS		A			A			B			C	

Intersection Summary			
HCM Average Control Delay	11.0	HCM Level of Service	B
HCM Volume to Capacity ratio	0.50		
Actuated Cycle Length (s)	80.0	Sum of lost time (s)	8.0
Intersection Capacity Utilization	75.9%	ICU Level of Service	D
Analysis Period (min)	15		
c Critical Lane Group			

Movement	EBL	EBT	EBR	WBL	WBT	WBR	NBL	NBT	NBR	SBL	SBT	SBR
Lane Configurations												
Ideal Flow (vphpl)	1900	1900	1900	1900	1900	1900	1900	1900	1900	1900	1900	1900
Total Lost time (s)		4.0			4.0		4.0	4.0		4.0	4.0	
Lane Util. Factor		0.91			0.91		1.00	0.95		1.00	0.95	
Frpb, ped/bikes		1.00			0.99		1.00	0.99		1.00	0.99	
Flpb, ped/bikes		1.00			1.00		0.98	1.00		0.97	1.00	
Frt		0.99			0.95		1.00	0.98		1.00	0.99	
Flt Protected		0.99			1.00		0.95	1.00		0.95	1.00	
Satd. Flow (prot)		4925			4749		1742	3426		1724	3474	
Flt Permitted		0.67			0.69		0.34	1.00		0.27	1.00	
Satd. Flow (perm)		3327			3271		631	3426		482	3474	
Volume (vph)	222	594	81	61	358	194	100	735	98	145	595	58
Peak-hour factor, PHF	0.90	0.90	0.90	0.90	0.90	0.90	0.90	0.90	0.90	0.90	0.90	0.90
Adj. Flow (vph)	247	660	90	68	398	216	111	817	109	161	661	64
RTOR Reduction (vph)	0	12	0	0	14	0	0	5	0	0	4	0
Lane Group Flow (vph)	0	985	0	0	668	0	111	921	0	161	721	0
Confl. Peds. (#/hr)	26		19			26	39		92	92		39
Turn Type	Perm			pm+pt			Perm			Perm		
Protected Phases		4		3	8			2			6	
Permitted Phases	4			8			2			6		
Actuated Green, G (s)		26.5			26.5		66.0	66.0		66.0	66.0	
Effective Green, g (s)		28.0			28.0		67.0	67.0		67.0	67.0	
Actuated g/C Ratio		0.27			0.27		0.65	0.65		0.65	0.65	
Clearance Time (s)		5.5			5.5		5.0	5.0		5.0	5.0	
Vehicle Extension (s)		2.0			2.0		2.0	2.0		2.0	2.0	
Lane Grp Cap (vph)		904			889		410	2229		314	2260	
v/s Ratio Prot								0.27			0.21	
v/s Ratio Perm		c0.30			0.20		0.18			c0.33		
v/c Ratio		1.22dl			0.88dl		0.27	0.41		0.51	0.32	
Uniform Delay, d1		37.5			34.3		7.6	8.6		9.4	7.9	
Progression Factor		1.00			1.00		1.00	1.00		1.00	1.00	
Incremental Delay, d2		57.5			3.2		1.6	0.6		5.9	0.4	
Delay (s)		95.0			37.5		9.3	9.2		15.3	8.3	
Level of Service		F			D		A	A		B	A	
Approach Delay (s)		95.0			37.5			9.2			9.6	
Approach LOS		F			D			A			A	

Intersection Summary			
HCM Average Control Delay	38.4	HCM Level of Service	D
HCM Volume to Capacity ratio	0.68		
Actuated Cycle Length (s)	103.0	Sum of lost time (s)	8.0
Intersection Capacity Utilization	80.7%	ICU Level of Service	D
Analysis Period (min)	15		

dl Defacto Left Lane. Recode with 1 though lane as a left lane.
c Critical Lane Group

Movement	EBL	EBT	EBR	WBL	WBT	WBR	NBL	NBT	NBR	SBL	SBT	SBR
Lane Configurations												
Ideal Flow (vphpl)	1900	1900	1900	1900	1900	1900	1900	1900	1900	1900	1900	1900
Total Lost time (s)		4.0			4.0			4.0	4.0		4.0	
Lane Util. Factor		0.91			0.91			1.00	1.00		1.00	
Frpb, ped/bikes		1.00			1.00			1.00	0.89		0.94	
Flpb, ped/bikes		1.00			1.00			0.97	1.00		0.98	
Frt		0.99			0.99			1.00	0.85		0.93	
Flt Protected		1.00			0.99			0.98	1.00		0.99	
Satd. Flow (prot)		5015			4982			1778	1406		1583	
Flt Permitted		0.89			0.77			0.87	1.00		0.92	
Satd. Flow (perm)		4494			3862			1566	1406		1467	
Volume (vph)	36	776	35	82	530	28	52	92	191	33	33	68
Peak-hour factor, PHF	0.99	0.99	0.99	0.99	0.99	0.99	0.99	0.99	0.99	0.99	0.99	0.99
Adj. Flow (vph)	36	784	35	83	535	28	53	93	193	33	33	69
RTOR Reduction (vph)	0	6	0	0	6	0	0	0	91	0	47	0
Lane Group Flow (vph)	0	849	0	0	640	0	0	146	102	0	88	0
Confl. Peds. (#/hr)	100		100	100		100	100		100	100		100
Turn Type	Perm			Perm			Perm		Perm	Perm		
Protected Phases		4			8			2			6	
Permitted Phases	4			8			2		2	6		
Actuated Green, G (s)		49.5			49.5			24.5	24.5		24.5	
Effective Green, g (s)		48.5			48.5			23.5	23.5		23.5	
Actuated g/C Ratio		0.61			0.61			0.29	0.29		0.29	
Clearance Time (s)		3.0			3.0			3.0	3.0		3.0	
Lane Grp Cap (vph)		2724			2341			460	413		431	
v/s Ratio Prot												
v/s Ratio Perm		c0.19			0.17			c0.09	0.07		0.06	
v/c Ratio		0.31			0.27			0.32	0.25		0.20	
Uniform Delay, d1		7.6			7.4			22.0	21.5		21.2	
Progression Factor		1.00			1.00			1.00	1.00		1.00	
Incremental Delay, d2		0.3			0.3			1.8	1.4		1.1	
Delay (s)		7.9			7.7			23.8	22.9		22.3	
Level of Service		A			A			C	C		C	
Approach Delay (s)		7.9			7.7			23.3			22.3	
Approach LOS		A			A			C			C	

Intersection Summary			
HCM Average Control Delay	11.5	HCM Level of Service	B
HCM Volume to Capacity ratio	0.31		
Actuated Cycle Length (s)	80.0	Sum of lost time (s)	8.0
Intersection Capacity Utilization	96.6%	ICU Level of Service	F
Analysis Period (min)	15		

c Critical Lane Group

Movement	EBL	EBT	EBR	WBL	WBT	WBR	NBL	NBT	NBR	SBL	SBT	SBR
Lane Configurations												
Ideal Flow (vphpl)	1900	1900	1900	1900	1900	1900	1900	1900	1900	1900	1900	1900
Total Lost time (s)	4.0	4.0		4.0	4.0		4.0	4.0		4.0	4.0	
Lane Util. Factor	1.00	0.91		1.00	0.91		1.00	0.91		1.00	0.91	
Frpb, ped/bikes	1.00	0.99		1.00	0.99		1.00	0.99		1.00	0.99	
Flpb, ped/bikes	1.00	1.00		1.00	1.00		1.00	1.00		1.00	1.00	
Frt	1.00	0.98		1.00	0.95		1.00	0.98		1.00	0.98	
Flt Protected	0.95	1.00		0.95	1.00		0.95	1.00		0.95	1.00	
Satd. Flow (prot)	1770	4937		1770	4742		1770	4932		1770	4934	
Flt Permitted	0.95	1.00		0.95	1.00		0.95	1.00		0.95	1.00	
Satd. Flow (perm)	1770	4937		1770	4742		1770	4932		1770	4934	
Volume (vph)	187	693	86	81	376	210	167	653	106	307	379	63
Peak-hour factor, PHF	0.91	0.91	0.91	0.91	0.91	0.91	0.91	0.91	0.91	0.91	0.91	0.91
Adj. Flow (vph)	205	762	95	89	413	231	184	718	116	337	416	69
RTOR Reduction (vph)	0	16	0	0	100	0	0	22	0	0	23	0
Lane Group Flow (vph)	205	841	0	89	544	0	184	812	0	337	462	0
Confl. Peds. (#/hr)			81			22			50			43
Turn Type	Prot			Prot			Prot			Prot		
Protected Phases	3	4		3	4		1	2		1	2	
Permitted Phases												
Actuated Green, G (s)	11.0	24.1		11.0	24.1		20.9	26.0		20.9	26.0	
Effective Green, g (s)	11.0	25.1		11.0	25.1		20.9	27.0		20.9	27.0	
Actuated g/C Ratio	0.11	0.25		0.11	0.25		0.21	0.27		0.21	0.27	
Clearance Time (s)	4.0	5.0		4.0	5.0		4.0	5.0		4.0	5.0	
Vehicle Extension (s)	2.0	2.0		2.0	2.0		2.0	2.0		2.0	2.0	
Lane Grp Cap (vph)	195	1239		195	1190		370	1332		370	1332	
v/s Ratio Prot	c0.12	c0.17		0.05	0.11		0.10	c0.16		c0.19	0.09	
v/s Ratio Perm												
v/c Ratio	1.05	0.68		0.46	0.46		0.50	0.61		0.91	0.35	
Uniform Delay, d1	44.5	33.8		41.7	31.7		34.9	31.9		38.6	29.4	
Progression Factor	1.00	1.00		1.00	1.00		1.00	1.00		1.00	1.00	
Incremental Delay, d2	78.6	3.0		0.6	1.3		0.4	2.1		25.5	0.7	
Delay (s)	123.1	36.8		42.3	33.0		35.3	34.0		64.1	30.1	
Level of Service	F	D		D	C		D	C		E	C	
Approach Delay (s)		53.5			34.1			34.2			44.1	
Approach LOS		D			C			C			D	

Intersection Summary			
HCM Average Control Delay	42.0	HCM Level of Service	D
HCM Volume to Capacity ratio	0.76		
Actuated Cycle Length (s)	100.0	Sum of lost time (s)	16.0
Intersection Capacity Utilization	81.5%	ICU Level of Service	D
Analysis Period (min)	15		

c Critical Lane Group

Movement	EBL	EBT	EBR	WBL	WBT	WBR	NBL	NBT	NBR	SBL	SBT	SBR
Lane Configurations												
Ideal Flow (vphpl)	1900	1900	1900	1900	1900	1900	1900	1900	1900	1900	1900	1900
Total Lost time (s)		4.0			4.0		4.0	4.0		4.0	4.0	
Lane Util. Factor		1.00			1.00		1.00	0.95		1.00	0.95	
Frpb, ped/bikes		0.94			0.97		1.00	0.99		1.00	0.99	
Flpb, ped/bikes		0.96			0.97		0.96	1.00		0.93	1.00	
Frt		0.96			0.96		1.00	0.99		1.00	0.99	
Flt Protected		0.98			0.99		0.95	1.00		0.95	1.00	
Satd. Flow (prot)		1564			1655		1691	3468		1645	3451	
Flt Permitted		0.70			0.84		0.29	1.00		0.41	1.00	
Satd. Flow (perm)		1129			1419		523	3468		710	3451	
Volume (vph)	98	33	65	42	59	39	40	544	35	36	782	63
Peak-hour factor, PHF	0.94	0.94	0.94	0.94	0.94	0.94	0.94	0.94	0.94	0.94	0.94	0.94
Adj. Flow (vph)	104	35	69	45	63	41	43	579	37	38	832	67
RTOR Reduction (vph)	0	24	0	0	18	0	0	4	0	0	5	0
Lane Group Flow (vph)	0	184	0	0	131	0	43	612	0	38	894	0
Confl. Peds. (#/hr)	100		100	100		100	100		100	100		100
Turn Type	Perm			Perm			Perm			Perm		
Protected Phases		4			4			2			6	
Permitted Phases	4			4			2			6		
Actuated Green, G (s)		16.2			16.2		61.8	61.8		61.8	61.8	
Effective Green, g (s)		15.7			15.7		61.3	61.3		61.3	61.3	
Actuated g/C Ratio		0.18			0.18		0.72	0.72		0.72	0.72	
Clearance Time (s)		3.5			3.5		3.5	3.5		3.5	3.5	
Vehicle Extension (s)		2.0			2.0		2.0	2.0		2.0	2.0	
Lane Grp Cap (vph)		209			262		377	2501		512	2489	
v/s Ratio Prot								0.18			c0.26	
v/s Ratio Perm		c0.16			0.09		0.08			0.05		
v/c Ratio		0.88			0.50		0.11	0.24		0.07	0.36	
Uniform Delay, d1		33.7			31.1		3.6	4.0		3.5	4.5	
Progression Factor		1.00			1.00		1.00	1.00		1.00	1.00	
Incremental Delay, d2		31.6			0.5		0.6	0.2		0.3	0.4	
Delay (s)		65.4			31.7		4.2	4.2		3.8	4.9	
Level of Service		E			C		A	A		A	A	
Approach Delay (s)		65.4			31.7			4.2			4.8	
Approach LOS		E			C			A			A	

Intersection Summary			
HCM Average Control Delay	13.1	HCM Level of Service	B
HCM Volume to Capacity ratio	0.47		
Actuated Cycle Length (s)	85.0	Sum of lost time (s)	8.0
Intersection Capacity Utilization	58.2%	ICU Level of Service	B
Analysis Period (min)	15		

c Critical Lane Group

Movement	EBL	EBT	EBR	WBL	WBT	WBR	NBL	NBT	NBR	SBL	SBT	SBR
Lane Configurations												
Ideal Flow (vphpl)	1900	1900	1900	1900	1900	1900	1900	1900	1900	1900	1900	1900
Total Lost time (s)	4.0	4.0		4.0	4.0		4.0	4.0		4.0	4.0	
Lane Util. Factor	1.00	0.95		1.00	0.95		1.00	0.95		1.00	0.95	
Frpb, ped/bikes	1.00	0.97		1.00	0.95		1.00	0.99		1.00	0.93	
Flpb, ped/bikes	1.00	1.00		1.00	1.00		0.96	1.00		0.96	1.00	
Frt	1.00	0.96		1.00	0.97		1.00	0.99		1.00	0.94	
Flt Protected	0.95	1.00		0.95	1.00		0.95	1.00		0.95	1.00	
Satd. Flow (prot)	1770	3308		1770	3260		1691	3490		1696	3122	
Flt Permitted	0.95	1.00		0.95	1.00		0.29	1.00		0.42	1.00	
Satd. Flow (perm)	1770	3308		1770	3260		514	3490		745	3122	
Volume (vph)	127	316	100	56	383	111	113	502	29	113	491	294
Peak-hour factor, PHF	0.98	0.98	0.98	0.98	0.98	0.98	0.98	0.98	0.98	0.98	0.98	0.98
Adj. Flow (vph)	130	322	102	57	391	113	115	512	30	115	501	300
RTOR Reduction (vph)	0	36	0	0	33	0	0	4	0	0	90	0
Lane Group Flow (vph)	130	388	0	57	471	0	115	538	0	115	711	0
Confl. Peds. (#/hr)			100			100	100		100	100		100
Turn Type	Prot			Prot			Perm			Perm		
Protected Phases	7	4		3	8			2			6	
Permitted Phases							2			6		
Actuated Green, G (s)	9.2	21.9		5.1	17.8		44.5	44.5		44.5	44.5	
Effective Green, g (s)	9.7	21.4		5.6	17.3		46.0	46.0		46.0	46.0	
Actuated g/C Ratio	0.11	0.25		0.07	0.20		0.54	0.54		0.54	0.54	
Clearance Time (s)	4.5	3.5		4.5	3.5		5.5	5.5		5.5	5.5	
Vehicle Extension (s)	2.0	2.0		2.0	2.0		2.0	2.0		2.0	2.0	
Lane Grp Cap (vph)	202	833		117	664		278	1889		403	1690	
v/s Ratio Prot	c0.07	0.12		0.03	c0.14			0.15			c0.23	
v/s Ratio Perm							0.22			0.15		
v/c Ratio	0.64	0.47		0.49	0.71		0.41	0.28		0.29	0.42	
Uniform Delay, d1	36.0	27.0		38.3	31.5		11.5	10.6		10.6	11.6	
Progression Factor	1.00	1.00		1.00	1.00		1.00	1.00		1.00	1.00	
Incremental Delay, d2	5.2	0.2		1.2	2.8		4.5	0.4		1.8	0.8	
Delay (s)	41.2	27.1		39.5	34.3		16.0	11.0		12.4	12.4	
Level of Service	D	C		D	C		B	B		B	B	
Approach Delay (s)		30.4			34.9			11.8			12.4	
Approach LOS		C			C			B			B	

Intersection Summary			
HCM Average Control Delay	20.6	HCM Level of Service	C
HCM Volume to Capacity ratio	0.52		
Actuated Cycle Length (s)	85.0	Sum of lost time (s)	12.0
Intersection Capacity Utilization	70.1%	ICU Level of Service	C
Analysis Period (min)	15		

c Critical Lane Group

Movement	EBL	EBR	NBL	NBT	SBT	SBR
Lane Configurations						
Ideal Flow (vphpl)	1900	1900	1900	1900	1900	1900
Total Lost time (s)	4.0		4.0	4.0	4.0	
Lane Util. Factor	1.00		1.00	0.95	0.95	
Frpb, ped/bikes	0.92		1.00	1.00	0.95	
Flpb, ped/bikes	1.00		1.00	1.00	1.00	
Frt	0.91		1.00	1.00	0.98	
Flt Protected	0.98		0.95	1.00	1.00	
Satd. Flow (prot)	1527		1770	3539	3267	
Flt Permitted	0.98		0.95	1.00	1.00	
Satd. Flow (perm)	1527		1770	3539	3267	
Volume (vph)	64	144	85	1069	615	115
Peak-hour factor, PHF	0.96	0.96	0.96	0.96	0.96	0.96
Adj. Flow (vph)	67	150	89	1114	641	120
RTOR Reduction (vph)	103	0	0	0	17	0
Lane Group Flow (vph)	114	0	89	1114	744	0
Confl. Peds. (#/hr)	100	100	100			100
Turn Type			Prot			
Protected Phases	2		3	8	4	
Permitted Phases						
Actuated Green, G (s)	24.2		8.1	47.8	35.7	
Effective Green, g (s)	24.2		8.1	47.8	35.7	
Actuated g/C Ratio	0.30		0.10	0.60	0.45	
Clearance Time (s)	4.0		4.0	4.0	4.0	
Vehicle Extension (s)	3.0		3.0	3.0	3.0	
Lane Grp Cap (vph)	462		179	2115	1458	
v/s Ratio Prot	c0.07		0.05	c0.31	0.23	
v/s Ratio Perm						
v/c Ratio	0.25		0.50	0.53	0.51	
Uniform Delay, d1	21.0		34.0	9.5	15.9	
Progression Factor	1.00		1.00	1.00	0.66	
Incremental Delay, d2	1.3		2.2	0.2	1.0	
Delay (s)	22.3		36.2	9.7	11.6	
Level of Service	C		D	A	B	
Approach Delay (s)	22.3			11.7	11.6	
Approach LOS	C			B	B	

Intersection Summary			
HCM Average Control Delay	12.7	HCM Level of Service	B
HCM Volume to Capacity ratio	0.43		
Actuated Cycle Length (s)	80.0	Sum of lost time (s)	8.0
Intersection Capacity Utilization	54.7%	ICU Level of Service	A
Analysis Period (min)	15		

c Critical Lane Group

APPENDIX M:
YEAR 2015 PLUS COMMERCIAL ALTERNATIVE
INTERSECTION LEVEL OF SERVICE CALCULATION WORKSHEETS

HCM Signalized Intersection Capacity Analysis
1: 52nd St. & Shattuck Ave.

2015 AM + Commercial
1/21/2008

Movement	EBL	EBT	EBR	WBL	WBT	WBR	NBL	NBT	NBR	SBL	SBT	SBR
Lane Configurations												
Ideal Flow (vphpl)	1900	1900	1900	1900	1900	1900	1900	1900	1900	1900	1900	1900
Lane Width	12	12	12	12	12	12	16	16	16	16	16	16
Total Lost time (s)	4.0	4.0		4.0	4.0		2.0	2.0		2.0	2.0	
Lane Util. Factor	1.00	0.91		1.00	0.91		1.00	1.00		1.00	1.00	
Frpb, ped/bikes	1.00	0.99		1.00	0.99		1.00	0.99		1.00	0.98	
Flpb, ped/bikes	1.00	1.00		1.00	1.00		1.00	1.00		0.99	1.00	
Frt	1.00	0.97		1.00	0.98		1.00	0.97		1.00	0.94	
Flt Protected	0.95	1.00		0.95	1.00		0.95	1.00		0.95	1.00	
Satd. Flow (prot)	1770	4902		1770	4953		2006	2043		1985	1957	
Flt Permitted	0.95	1.00		0.95	1.00		0.09	1.00		0.45	1.00	
Satd. Flow (perm)	1770	4902		1770	4953		196	2043		945	1957	
Volume (vph)	300	953	212	90	1330	200	200	288	60	160	422	270
Peak-hour factor, PHF	0.95	0.95	0.95	0.95	0.95	0.95	0.95	0.95	0.95	0.95	0.95	0.95
Adj. Flow (vph)	316	1003	223	95	1400	211	211	303	63	168	444	284
RTOR Reduction (vph)	0	27	0	0	17	0	0	6	0	0	19	0
Lane Group Flow (vph)	316	1199	0	95	1594	0	211	360	0	168	709	0
Confl. Peds. (#/hr)			10	10		10	10		10	10		10
Turn Type	Prot			Prot			pm+pt			Perm		
Protected Phases	7	4		3	8		5	2			6	
Permitted Phases							2			6		
Actuated Green, G (s)	17.0	48.4		11.6	43.0		49.5	49.5		40.5	40.5	
Effective Green, g (s)	17.0	48.4		11.6	43.0		50.0	50.0		41.0	41.0	
Actuated g/C Ratio	0.14	0.40		0.10	0.36		0.42	0.42		0.34	0.34	
Clearance Time (s)	4.0	4.0		4.0	4.0		4.0	2.5		2.5	2.5	
Vehicle Extension (s)	3.0	3.0		3.0	3.0		3.0	3.0		3.0	3.0	
Lane Grp Cap (vph)	251	1977		171	1775		187	851		323	669	
v/s Ratio Prot	c0.18	0.24		0.05	c0.32		c0.07	0.18			c0.36	
v/s Ratio Perm							0.40			0.18		
v/c Ratio	1.26	0.61		0.56	0.90		1.13	0.42		0.52	1.06	
Uniform Delay, d1	51.5	28.3		51.7	36.4		58.7	24.8		31.6	39.5	
Progression Factor	1.00	1.00		1.00	1.00		1.00	1.00		1.00	1.00	
Incremental Delay, d2	144.6	1.4		3.9	7.7		104.5	0.3		1.5	51.7	
Delay (s)	196.1	29.7		55.6	44.1		163.2	25.1		33.1	91.2	
Level of Service	F	C		E	D		F	C		C	F	
Approach Delay (s)		63.8			44.7			75.6			80.3	
Approach LOS		E			D			E			F	

Intersection Summary			
HCM Average Control Delay	61.5	HCM Level of Service	E
HCM Volume to Capacity ratio	1.02		
Actuated Cycle Length (s)	120.0	Sum of lost time (s)	12.0
Intersection Capacity Utilization	110.4%	ICU Level of Service	H
Analysis Period (min)	15		
c Critical Lane Group			

HCM Signalized Intersection Capacity Analysis
2: 52nd St. & Telegraph Ave.

2015 AM + Commercial
1/21/2008

Movement	EBL	EBT	EBR	WBL	WBT	WBR	NBL	NBT	NBR	SBL	SBT	SBR
Lane Configurations												
Ideal Flow (vphpl)	1900	1900	1900	1900	1900	1900	1900	1900	1900	1900	1900	1900
Total Lost time (s)		4.0		4.0	4.0			4.0		4.0	4.0	
Lane Util. Factor		1.00		0.95	0.95			0.95		1.00	0.95	
Frpb, ped/bikes		1.00		1.00	0.99			0.99		1.00	0.96	
Flpb, ped/bikes		1.00		1.00	1.00			1.00		1.00	1.00	
Frt		0.95		1.00	0.91			0.97		1.00	0.96	
Flt Protected		0.98		0.95	1.00			1.00		0.95	1.00	
Satd. Flow (prot)		1748		1681	1596			3420		1770	3270	
Flt Permitted		0.48		0.74	1.00			0.93		0.95	1.00	
Satd. Flow (perm)		846		1302	1596			3196		1770	3270	
Volume (vph)	10	10	10	179	110	160	10	1155	235	100	1161	450
Peak-hour factor, PHF	0.95	0.95	0.95	0.95	0.95	0.95	0.95	0.95	0.95	0.95	0.95	0.95
Adj. Flow (vph)	11	11	11	188	116	168	11	1216	247	105	1222	474
RTOR Reduction (vph)	0	10	0	0	67	0	0	14	0	0	33	0
Lane Group Flow (vph)	0	23	0	188	217	0	0	1460	0	105	1663	0
Confl. Peds. (#/hr)	4					4	44		12			44
Turn Type	Perm			Perm			Perm			Prot		
Protected Phases		7			8			2		1	6	
Permitted Phases	7			8			2					
Actuated Green, G (s)		5.1		16.6	16.6			42.6		7.7	54.8	
Effective Green, g (s)		5.6		17.1	17.1			43.1		8.2	55.3	
Actuated g/C Ratio		0.06		0.19	0.19			0.48		0.09	0.61	
Clearance Time (s)		4.5		4.5	4.5			4.5		4.5	4.5	
Vehicle Extension (s)		2.0		2.0	2.0			2.0		2.0	2.0	
Lane Grp Cap (vph)		53		247	303			1531		161	2009	
v/s Ratio Prot										0.06	c0.51	
v/s Ratio Perm		c0.03		c0.14	0.14			c0.46				
v/c Ratio		0.43		0.76	0.72			0.95		0.65	0.83	
Uniform Delay, d1		40.7		34.5	34.2			22.5		39.5	13.6	
Progression Factor		1.00		1.00	1.00			1.01		1.00	1.00	
Incremental Delay, d2		2.0		11.7	6.5			6.4		7.0	4.1	
Delay (s)		42.7		46.2	40.7			29.1		46.5	17.7	
Level of Service		D		D	D			C		D	B	
Approach Delay (s)		42.7			42.9			29.1			19.4	
Approach LOS		D			D			C			B	

Intersection Summary			
HCM Average Control Delay	26.3	HCM Level of Service	C
HCM Volume to Capacity ratio	0.87		
Actuated Cycle Length (s)	90.0	Sum of lost time (s)	16.0
Intersection Capacity Utilization	107.9%	ICU Level of Service	G
Analysis Period (min)	15		
c Critical Lane Group			

Movement	EBL	EBT	EBR	WBL	WBT	WBR	NBL	NBT	NBR	SBL	SBT	SBR
Lane Configurations												
Ideal Flow (vphpl)	1900	1900	1900	1900	1900	1900	1900	1900	1900	1900	1900	1900
Total Lost time (s)	4.0	4.0		4.0	4.0		4.0	4.0		4.0	4.0	
Lane Util. Factor	0.97	0.95		1.00	0.95		1.00	0.95		1.00	0.95	
Frpb, ped/bikes	1.00	0.99		1.00	0.99		1.00	0.99		1.00	0.98	
Flpb, ped/bikes	1.00	1.00		1.00	1.00		1.00	1.00		1.00	1.00	
Frt	1.00	0.98		1.00	0.95		1.00	0.98		1.00	0.97	
Flt Protected	0.95	1.00		0.95	1.00		0.95	1.00		0.95	1.00	
Satd. Flow (prot)	3433	3435		1770	3356		1770	3417		1770	3397	
Flt Permitted	0.95	1.00		0.95	1.00		0.95	1.00		0.95	1.00	
Satd. Flow (perm)	3433	3435		1770	3356		1770	3417		1770	3397	
Volume (vph)	460	590	93	120	700	310	110	661	120	280	900	180
Peak-hour factor, PHF	0.96	0.96	0.96	0.96	0.96	0.96	0.96	0.96	0.96	0.96	0.96	0.96
Adj. Flow (vph)	479	615	97	125	729	323	115	689	125	292	938	188
RTOR Reduction (vph)	0	13	0	0	56	0	0	17	0	0	18	0
Lane Group Flow (vph)	479	699	0	125	996	0	115	797	0	292	1108	0
Confl. Peds. (#/hr)	6		24	24		6	36		28	28		36
Turn Type	Prot			Prot			Prot			Prot		
Protected Phases	7	4		3	8		5	2		1	6	
Permitted Phases												
Actuated Green, G (s)	13.0	28.9		9.6	25.5		8.1	23.5		11.0	26.4	
Effective Green, g (s)	12.5	29.9		9.1	26.5		7.6	24.5		10.5	27.4	
Actuated g/C Ratio	0.14	0.33		0.10	0.29		0.08	0.27		0.12	0.30	
Clearance Time (s)	3.5	5.0		3.5	5.0		3.5	5.0		3.5	5.0	
Vehicle Extension (s)	2.0	2.0		2.0	2.0		2.0	2.0		2.0	2.0	
Lane Grp Cap (vph)	477	1141		179	988		149	930		207	1034	
v/s Ratio Prot	c0.14	c0.20		0.07	c0.30		0.06	0.23		c0.17	c0.33	
v/s Ratio Perm												
v/c Ratio	1.00	0.61		0.70	1.01		0.77	0.86		1.41	1.07	
Uniform Delay, d1	38.8	25.2		39.1	31.8		40.4	31.1		39.8	31.3	
Progression Factor	1.00	1.00		1.00	1.00		1.00	1.00		1.14	0.89	
Incremental Delay, d2	42.2	0.7		9.2	30.7		19.9	10.1		200.6	43.3	
Delay (s)	81.0	25.9		48.3	62.4		60.2	41.1		246.1	71.1	
Level of Service	F	C		D	E		E	D		F	E	
Approach Delay (s)		48.0			60.9			43.5			107.1	
Approach LOS		D			E			D			F	

Intersection Summary			
HCM Average Control Delay	68.1	HCM Level of Service	E
HCM Volume to Capacity ratio	1.14		
Actuated Cycle Length (s)	90.0	Sum of lost time (s)	20.0
Intersection Capacity Utilization	93.9%	ICU Level of Service	F
Analysis Period (min)	15		

c Critical Lane Group

Movement	EBL	EBT	EBR	WBL	WBT	WBR	NBL	NBT	NBR	SBL	SBT	SBR
Lane Configurations												
Ideal Flow (vphpl)	1900	1900	1900	1900	1900	1900	1900	1900	1900	1900	1900	1900
Total Lost time (s)		4.0						4.0		4.0	4.0	
Lane Util. Factor		1.00						0.95		0.97	0.95	
Frt		0.86						0.93		1.00	0.98	
Flt Protected		1.00						1.00		0.95	1.00	
Satd. Flow (prot)		1611						3285		3433	3476	
Flt Permitted		1.00						0.94		0.95	1.00	
Satd. Flow (perm)		1611						3094		3433	3476	
Volume (vph)	0	0	10	0	0	0	10	345	321	1600	439	60
Peak-hour factor, PHF	0.95	0.95	0.95	0.95	0.95	0.95	0.95	0.95	0.95	0.95	0.95	0.95
Adj. Flow (vph)	0	0	11	0	0	0	11	363	338	1684	462	63
RTOR Reduction (vph)	0	11	0	0	0	0	0	26	0	0	0	0
Lane Group Flow (vph)	0	0	0	0	0	0	0	686	0	1684	525	0
Turn Type										Prot		
Protected Phases								2		1	6	
Permitted Phases												
Actuated Green, G (s)		0.0						8.0		29.0	45.0	
Effective Green, g (s)		0.0						8.0		29.0	45.0	
Actuated g/C Ratio		0.00						0.18		0.64	1.00	
Clearance Time (s)								4.0		4.0	2.0	
Lane Grp Cap (vph)		0						550		2212	3476	
v/s Ratio Prot										c0.49	0.15	
v/s Ratio Perm								c0.22				
v/c Ratio		0.00						10.56dr		0.76	0.15	
Uniform Delay, d1		22.5						18.5		5.6	0.0	
Progression Factor		1.00						0.77		1.00	1.00	
Incremental Delay, d2		0.0						124.7		2.5	0.1	
Delay (s)		22.5						138.9		8.1	0.1	
Level of Service		C						F		A	A	
Approach Delay (s)		22.5			0.0			138.9			6.2	
Approach LOS		C			A			F			A	

Intersection Summary			
HCM Average Control Delay	38.5	HCM Level of Service	D
HCM Volume to Capacity ratio	0.87		
Actuated Cycle Length (s)	45.0	Sum of lost time (s)	8.0
Intersection Capacity Utilization	79.1%	ICU Level of Service	D
Analysis Period (min)	15		

dr Defacto Right Lane. Recode with 1 though lane as a right lane.

c Critical Lane Group

Movement	EBL	EBT	EBR	WBL	WBT	WBR	NBL	NBT	NBR	SBL	SBT	SBR
Lane Configurations												
Ideal Flow (vphpl)	1900	1900	1900	1900	1900	1900	1900	1900	1900	1900	1900	1900
Total Lost time (s)		4.0			4.0			4.0			4.0	
Lane Util. Factor		1.00			1.00			0.95			0.95	
Frpb, ped/bikes		0.97			0.96			0.98			0.99	
Flpb, ped/bikes		0.98			0.97			1.00			1.00	
Frt		0.97			0.94			0.98			0.99	
Flt Protected		0.98			0.99			1.00			1.00	
Satd. Flow (prot)		1688			1606			3399			3472	
Flt Permitted		0.83			0.87			0.91			0.88	
Satd. Flow (perm)		1436			1418			3085			3064	
Volume (vph)	70	80	34	60	60	90	31	496	80	50	589	30
Peak-hour factor, PHF	0.95	0.95	0.95	0.95	0.95	0.95	0.95	0.95	0.95	0.95	0.95	0.95
Adj. Flow (vph)	74	84	36	63	63	95	33	522	84	53	620	32
RTOR Reduction (vph)	0	18	0	0	60	0	0	27	0	0	8	0
Lane Group Flow (vph)	0	176	0	0	161	0	0	612	0	0	697	0
Confl. Peds. (#/hr)	100		100	100		100	100		100	100		100
Turn Type	Perm			Perm			Perm			Perm		
Protected Phases		4			8			2			6	
Permitted Phases	4			8			2			6		
Actuated Green, G (s)		15.0			15.0			22.0			22.0	
Effective Green, g (s)		15.0			15.0			22.0			22.0	
Actuated g/C Ratio		0.33			0.33			0.49			0.49	
Clearance Time (s)		4.0			4.0			4.0			4.0	
Lane Grp Cap (vph)		479			473			1508			1498	
v/s Ratio Prot												
v/s Ratio Perm		c0.12			0.11			0.20			c0.23	
v/c Ratio		0.37			0.34			0.41			0.47	
Uniform Delay, d1		11.4			11.3			7.3			7.6	
Progression Factor		1.00			1.00			1.00			1.00	
Incremental Delay, d2		2.2			2.0			0.8			1.0	
Delay (s)		13.6			13.2			8.1			8.6	
Level of Service		B			B			A			A	
Approach Delay (s)		13.6			13.2			8.1			8.6	
Approach LOS		B			B			A			A	

Intersection Summary			
HCM Average Control Delay	9.6	HCM Level of Service	A
HCM Volume to Capacity ratio	0.43		
Actuated Cycle Length (s)	45.0	Sum of lost time (s)	8.0
Intersection Capacity Utilization	64.1%	ICU Level of Service	C
Analysis Period (min)	15		
c Critical Lane Group			

Movement	EBL	EBT	EBR	WBL	WBT	WBR	NBL	NBT	NBR	SBL	SBT	SBR
Lane Configurations												
Ideal Flow (vphpl)	1900	1900	1900	1900	1900	1900	1900	1900	1900	1900	1900	1900
Total Lost time (s)		4.0			4.0			4.0			4.0	
Lane Util. Factor		1.00			1.00			0.95			0.91	
Frpb, ped/bikes		0.95			0.96			0.98			0.98	
Flpb, ped/bikes		0.97			0.98			1.00			1.00	
Frt		0.96			0.96			0.99			0.99	
Flt Protected		0.98			0.99			1.00			1.00	
Satd. Flow (prot)		1627			1649			3443			4933	
Flt Permitted		0.79			0.79			0.84			0.82	
Satd. Flow (perm)		1298			1328			2882			4053	
Volume (vph)	70	80	70	48	70	50	30	1029	62	70	1587	100
Peak-hour factor, PHF	0.95	0.95	0.95	0.95	0.95	0.95	0.95	0.95	0.95	0.95	0.95	0.95
Adj. Flow (vph)	74	84	74	51	74	53	32	1083	65	74	1671	105
RTOR Reduction (vph)	0	6	0	0	24	0	0	3	0	0	5	0
Lane Group Flow (vph)	0	226	0	0	154	0	0	1177	0	0	1845	0
Confl. Peds. (#/hr)	100		100	100		100	100		100	100		100
Turn Type	Perm			Perm			Perm			Perm		
Protected Phases		4			4			2			6	
Permitted Phases	4			4			2			6		
Actuated Green, G (s)		16.7			16.7			59.3			59.3	
Effective Green, g (s)		17.2			17.2			59.8			59.8	
Actuated g/C Ratio		0.20			0.20			0.70			0.70	
Clearance Time (s)		4.5			4.5			4.5			4.5	
Vehicle Extension (s)		2.0			2.0			2.0			2.0	
Lane Grp Cap (vph)		263			269			2028			2851	
v/s Ratio Prot												
v/s Ratio Perm		c0.17			0.12			0.41			c0.46	
v/c Ratio		0.86			0.57			0.58			0.65	
Uniform Delay, d1		32.7			30.6			6.3			6.9	
Progression Factor		1.00			1.00			0.75			1.00	
Incremental Delay, d2		23.1			1.8			1.0			1.2	
Delay (s)		55.9			32.4			5.8			8.0	
Level of Service		E			C			A			A	
Approach Delay (s)		55.9			32.4			5.8			8.0	
Approach LOS		E			C			A			A	

Intersection Summary			
HCM Average Control Delay	11.7	HCM Level of Service	B
HCM Volume to Capacity ratio	0.70		
Actuated Cycle Length (s)	85.0	Sum of lost time (s)	8.0
Intersection Capacity Utilization	103.9%	ICU Level of Service	G
Analysis Period (min)	15		
c Critical Lane Group			

Movement	EBL	EBT	EBR	WBL	WBT	WBR	NBL	NBT	NBR	SBL	SBT	SBR
Lane Configurations												
Ideal Flow (vphpl)	1900	1900	1900	1900	1900	1900	1900	1900	1900	1900	1900	1900
Total Lost time (s)	4.0	4.0		4.0	4.0		4.0	4.0		4.0	4.0	
Lane Util. Factor	1.00	0.95		1.00	0.95		1.00	1.00		1.00	1.00	
Frpb, ped/bikes	1.00	1.00		1.00	0.99		1.00	0.99		1.00	1.00	
Flpb, ped/bikes	0.99	1.00		0.99	1.00		1.00	1.00		0.98	1.00	
Frt	1.00	0.97		1.00	0.99		1.00	0.98		1.00	0.99	
Flt Protected	0.95	1.00		0.95	1.00		0.95	1.00		0.95	1.00	
Satd. Flow (prot)	1747	3435		1759	3462		1767	1806		1736	1841	
Flt Permitted	0.17	1.00		0.35	1.00		0.44	1.00		0.59	1.00	
Satd. Flow (perm)	320	3435		657	3462		810	1806		1077	1841	
Volume (vph)	30	391	80	73	684	74	90	201	39	86	400	30
Peak-hour factor, PHF	0.95	0.95	0.95	0.95	0.95	0.95	0.95	0.95	0.95	0.95	0.95	0.95
Adj. Flow (vph)	32	412	84	77	720	78	95	212	41	91	421	32
RTOR Reduction (vph)	0	21	0	0	10	0	0	9	0	0	3	0
Lane Group Flow (vph)	32	475	0	77	788	0	95	244	0	91	450	0
Confl. Peds. (#/hr)	30		12	12		30	6		54	54		6
Turn Type	Perm			Perm			Perm			Perm		
Protected Phases		4			8			2			6	
Permitted Phases	4			8			2			6		
Actuated Green, G (s)	24.0	24.0		24.0	24.0		49.5	49.5		49.5	49.5	
Effective Green, g (s)	23.0	23.0		23.0	23.0		49.0	49.0		49.0	49.0	
Actuated g/C Ratio	0.29	0.29		0.29	0.29		0.61	0.61		0.61	0.61	
Clearance Time (s)	3.0	3.0		3.0	3.0		3.5	3.5		3.5	3.5	
Lane Grp Cap (vph)	92	988		189	995		496	1106		660	1128	
v/s Ratio Prot		0.14			c0.23			0.14			c0.24	
v/s Ratio Perm	0.10			0.12			0.12			0.08		
v/c Ratio	0.35	0.48		0.41	0.79		0.19	0.22		0.14	0.40	
Uniform Delay, d1	22.6	23.6		23.0	26.3		6.8	6.9		6.6	7.9	
Progression Factor	1.00	1.00		0.88	0.91		1.00	1.00		1.00	1.00	
Incremental Delay, d2	10.1	1.7		5.9	5.9		0.9	0.5		0.4	1.1	
Delay (s)	32.7	25.2		26.0	30.0		7.7	7.4		7.0	9.0	
Level of Service	C	C		C	C		A	A		A	A	
Approach Delay (s)		25.7			29.6			7.5			8.7	
Approach LOS		C			C			A			A	

Intersection Summary			
HCM Average Control Delay	20.4	HCM Level of Service	C
HCM Volume to Capacity ratio	0.52		
Actuated Cycle Length (s)	80.0	Sum of lost time (s)	8.0
Intersection Capacity Utilization	83.2%	ICU Level of Service	E
Analysis Period (min)	15		
c Critical Lane Group			

Movement	EBL	EBT	EBR	WBL	WBT	WBR	NBL	NBT	NBR	SBL	SBT	SBR
Lane Configurations												
Ideal Flow (vphpl)	1900	1900	1900	1900	1900	1900	1900	1900	1900	1900	1900	1900
Total Lost time (s)	4.0	4.0		4.0	4.0			4.0			4.0	
Lane Util. Factor	1.00	0.95		1.00	0.95			0.95			0.95	
Frpb, ped/bikes	1.00	0.99		1.00	1.00			1.00			1.00	
Flpb, ped/bikes	1.00	1.00		0.98	1.00			1.00			1.00	
Frt	1.00	0.98		1.00	0.99			0.97			0.98	
Flt Protected	0.95	1.00		0.95	1.00			0.99			0.99	
Satd. Flow (prot)	1763	3432		1741	3512			3377			3419	
Flt Permitted	0.28	1.00		0.41	1.00			0.79			0.83	
Satd. Flow (perm)	512	3432		745	3512			2709			2850	
Volume (vph)	30	436	80	61	721	33	70	171	59	70	240	50
Peak-hour factor, PHF	0.95	0.95	0.95	0.95	0.95	0.95	0.95	0.95	0.95	0.95	0.95	0.95
Adj. Flow (vph)	32	459	84	64	759	35	74	180	62	74	253	53
RTOR Reduction (vph)	0	19	0	0	4	0	0	27	0	0	16	0
Lane Group Flow (vph)	32	524	0	64	790	0	0	289	0	0	364	0
Confl. Peds. (#/hr)	18		54	54		18	4		18	18		4
Turn Type	Perm			Perm			Perm			Perm		
Protected Phases		4			8			2			6	
Permitted Phases	4			8			2			6		
Actuated Green, G (s)	38.0	38.0		38.0	38.0			32.0			32.0	
Effective Green, g (s)	39.0	39.0		39.0	39.0			33.0			33.0	
Actuated g/C Ratio	0.49	0.49		0.49	0.49			0.41			0.41	
Clearance Time (s)	5.0	5.0		5.0	5.0			5.0			5.0	
Lane Grp Cap (vph)	250	1673		363	1712			1117			1176	
v/s Ratio Prot		0.15			c0.22							
v/s Ratio Perm	0.06			0.09				0.11			c0.13	
v/c Ratio	0.13	0.31		0.18	0.46			0.26			0.31	
Uniform Delay, d1	11.2	12.4		11.5	13.6			15.5			15.8	
Progression Factor	0.95	1.03		1.25	1.39			0.61			1.00	
Incremental Delay, d2	1.0	0.5		1.0	0.8			0.5			0.7	
Delay (s)	11.6	13.2		15.3	19.7			9.9			16.5	
Level of Service	B	B		B	B			A			B	
Approach Delay (s)		13.1			19.4			9.9			16.5	
Approach LOS		B			B			A			B	

Intersection Summary			
HCM Average Control Delay	15.8	HCM Level of Service	B
HCM Volume to Capacity ratio	0.39		
Actuated Cycle Length (s)	80.0	Sum of lost time (s)	8.0
Intersection Capacity Utilization	73.4%	ICU Level of Service	D
Analysis Period (min)	15		
c Critical Lane Group			

Movement	EBL	EBT	EBR	WBL	WBT	WBR	NBL	NBT	NBR	SBL	SBT	SBR
Lane Configurations												
Ideal Flow (vphpl)	1900	1900	1900	1900	1900	1900	1900	1900	1900	1900	1900	1900
Total Lost time (s)	4.0	4.0		4.0	4.0			4.0			4.0	
Lane Util. Factor	1.00	0.95		1.00	0.95			0.95			0.95	
Frpb, ped/bikes	1.00	0.99		1.00	1.00			0.99			1.00	
Flpb, ped/bikes	1.00	1.00		0.98	1.00			1.00			1.00	
Frt	1.00	0.98		1.00	0.98			0.96			0.99	
Flt Protected	0.95	1.00		0.95	1.00			0.99			0.99	
Satd. Flow (prot)	1764	3457		1736	3441			3361			3449	
Flt Permitted	0.25	1.00		0.40	1.00			0.87			0.74	
Satd. Flow (perm)	460	3457		739	3441			2928			2568	
Volume (vph)	40	473	61	105	716	129	39	238	92	127	346	30
Peak-hour factor, PHF	0.96	0.96	0.96	0.96	0.96	0.96	0.96	0.96	0.96	0.96	0.96	0.96
Adj. Flow (vph)	42	493	64	109	746	134	41	248	96	132	360	31
RTOR Reduction (vph)	0	13	0	0	19	0	0	40	0	0	6	0
Lane Group Flow (vph)	42	544	0	109	861	0	0	345	0	0	517	0
Confl. Peds. (#/hr)	13		71	71		13	22		22	22		22
Turn Type	Perm			Perm			Perm			Perm		
Protected Phases		4			8			2			6	
Permitted Phases	4			8			2			6		
Actuated Green, G (s)	41.5	41.5		41.5	41.5			32.0			32.0	
Effective Green, g (s)	41.0	41.0		41.0	41.0			31.0			31.0	
Actuated g/C Ratio	0.51	0.51		0.51	0.51			0.39			0.39	
Clearance Time (s)	3.5	3.5		3.5	3.5			3.0			3.0	
Lane Grp Cap (vph)	236	1772		379	1764			1135			995	
v/s Ratio Prot		0.16			c0.25							
v/s Ratio Perm	0.09			0.15				0.12			c0.20	
v/c Ratio	0.18	0.31		0.29	0.49			0.30			0.52	
Uniform Delay, d1	10.5	11.3		11.1	12.7			17.0			18.8	
Progression Factor	1.25	1.30		0.84	0.82			0.59			1.00	
Incremental Delay, d2	1.6	0.4		1.8	0.9			0.7			1.9	
Delay (s)	14.7	15.1		11.1	11.3			10.7			20.7	
Level of Service	B	B		B	B			B			C	
Approach Delay (s)		15.1			11.2			10.7			20.7	
Approach LOS		B			B			B			C	

Intersection Summary			
HCM Average Control Delay	14.1	HCM Level of Service	B
HCM Volume to Capacity ratio	0.50		
Actuated Cycle Length (s)	80.0	Sum of lost time (s)	8.0
Intersection Capacity Utilization	102.5%	ICU Level of Service	G
Analysis Period (min)	15		
c Critical Lane Group			

Movement	EBT	EBR	WBL	WBT	NBL	NBR
Lane Configurations						
Ideal Flow (vphpl)	1900	1900	1900	1900	1900	1900
Total Lost time (s)	4.0		4.0	4.0	4.0	
Lane Util. Factor	0.95		1.00	0.95	1.00	
Frpb, ped/bikes	0.92		1.00	1.00	1.00	
Flpb, ped/bikes	1.00		1.00	1.00	1.00	
Frt	0.97		1.00	1.00	0.96	
Flt Protected	1.00		0.95	1.00	0.96	
Satd. Flow (prot)	3142		1770	3539	1733	
Flt Permitted	1.00		0.95	1.00	0.96	
Satd. Flow (perm)	3142		1770	3539	1733	
Volume (vph)	543	151	88	839	111	40
Peak-hour factor, PHF	0.95	0.95	0.95	0.95	0.95	0.95
Adj. Flow (vph)	572	159	93	883	117	42
RTOR Reduction (vph)	0	0	0	0	0	0
Lane Group Flow (vph)	731	0	93	883	159	0
Confl. Peds. (#/hr)		146	266			
Turn Type			Prot			
Protected Phases	4		3	8	2	
Permitted Phases						
Actuated Green, G (s)	48.4		8.2	60.6	11.4	
Effective Green, g (s)	48.4		8.2	60.6	11.4	
Actuated g/C Ratio	0.60		0.10	0.76	0.14	
Clearance Time (s)	4.0		4.0	4.0	4.0	
Vehicle Extension (s)	3.0		3.0	3.0	3.0	
Lane Grp Cap (vph)	1901		181	2681	247	
v/s Ratio Prot	c0.23		c0.05	0.25	c0.09	
v/s Ratio Perm						
v/c Ratio	0.38		0.51	0.33	0.64	
Uniform Delay, d1	8.1		34.0	3.1	32.4	
Progression Factor	1.07		1.00	1.00	1.27	
Incremental Delay, d2	0.6		2.5	0.3	5.5	
Delay (s)	9.3		36.5	3.5	46.8	
Level of Service	A		D	A	D	
Approach Delay (s)	9.3			6.6	46.8	
Approach LOS	A			A	D	

Intersection Summary			
HCM Average Control Delay	11.1	HCM Level of Service	B
HCM Volume to Capacity ratio	0.44		
Actuated Cycle Length (s)	80.0	Sum of lost time (s)	12.0
Intersection Capacity Utilization	44.8%	ICU Level of Service	A
Analysis Period (min)	15		
c Critical Lane Group			

Movement	EBL	EBT	EBR	WBL	WBT	WBR	NBL	NBT	NBR	SBL	SBT	SBR
Lane Configurations												
Ideal Flow (vphpl)	1900	1900	1900	1900	1900	1900	1900	1900	1900	1900	1900	1900
Total Lost time (s)	4.0	4.0		4.0	4.0			4.0		4.0	4.0	
Lane Util. Factor	1.00	0.95		1.00	0.95			0.95		1.00	0.95	
Frpb, ped/bikes	1.00	0.96		1.00	0.98			0.99		1.00	0.98	
Flpb, ped/bikes	0.95	1.00		0.92	1.00			1.00		1.00	1.00	
Frt	1.00	0.96		1.00	0.98			0.99		1.00	0.97	
Flt Protected	0.95	1.00		0.95	1.00			0.99		0.95	1.00	
Satd. Flow (prot)	1686	3268		1634	3410			3434		1770	3345	
Flt Permitted	0.25	1.00		0.37	1.00			0.58		0.95	1.00	
Satd. Flow (perm)	449	3268		640	3410			1993		1770	3345	
Volume (vph)	126	350	107	98	542	70	125	495	49	140	984	260
Peak-hour factor, PHF	0.95	0.95	0.95	0.95	0.95	0.95	0.95	0.95	0.95	0.95	0.95	0.95
Adj. Flow (vph)	133	368	113	103	571	74	132	521	52	147	1036	274
RTOR Reduction (vph)	0	34	0	0	12	0	0	9	0	0	18	0
Lane Group Flow (vph)	133	447	0	103	633	0	0	696	0	147	1292	0
Confl. Peds. (#/hr)	72		137	137		72			58	58		92
Turn Type	Perm			Perm			Prot			Prot		
Protected Phases		4			8		5	2		1	6	
Permitted Phases	4			8								
Actuated Green, G (s)	25.3	25.3		25.3	25.3			35.7		10.5	50.7	
Effective Green, g (s)	25.8	25.8		25.8	25.8			36.2		11.0	51.2	
Actuated g/C Ratio	0.30	0.30		0.30	0.30			0.43		0.13	0.60	
Clearance Time (s)	4.5	4.5		4.5	4.5			4.5		4.5	4.5	
Vehicle Extension (s)	2.0	2.0		2.0	2.0			2.0		2.0	2.0	
Lane Grp Cap (vph)	136	992		194	1035			849		229	2015	
v/s Ratio Prot		0.14			0.19					0.08	c0.39	
v/s Ratio Perm	c0.30			0.16				c0.35				
v/c Ratio	0.98	0.45		0.53	0.61			8.80dl		0.64	0.64	
Uniform Delay, d1	29.3	23.9		24.6	25.3			21.5		35.1	10.9	
Progression Factor	1.00	1.00		1.00	1.00			1.40		1.27	0.55	
Incremental Delay, d2	69.4	0.1		1.4	0.8			5.9		3.3	1.1	
Delay (s)	98.7	24.0		26.0	26.1			36.0		47.9	7.2	
Level of Service	F	C		C	C			D		D	A	
Approach Delay (s)		40.2			26.1			36.0			11.3	
Approach LOS		D			C			D			B	

Intersection Summary			
HCM Average Control Delay	24.4	HCM Level of Service	C
HCM Volume to Capacity ratio	0.86		
Actuated Cycle Length (s)	85.0	Sum of lost time (s)	12.0
Intersection Capacity Utilization	94.0%	ICU Level of Service	F
Analysis Period (min)	15		

dl Defacto Left Lane. Recode with 1 though lane as a left lane.
dr Defacto Right Lane. Recode with 1 though lane as a right lane.
c Critical Lane Group

Movement	WBL	WBR	NBT	NBR	SBL	SBT
Lane Configurations						
Sign Control	Stop		Free			Free
Grade	0%		0%			0%
Volume (veh/h)	10	33	715	10	20	1143
Peak Hour Factor	0.95	0.95	0.95	0.95	0.95	0.95
Hourly flow rate (vph)	11	35	753	11	21	1203
Pedestrians	34		33			34
Lane Width (ft)	12.0		12.0			12.0
Walking Speed (ft/s)	4.0		4.0			4.0
Percent Blockage	3		3			3
Right turn flare (veh)						
Median type	None					
Median storage veh)						
Upstream signal (ft)			230			471
pX, platoon unblocked	0.77	0.95			0.95	
vC, conflicting volume	1469	450			797	
vC1, stage 1 conf vol						
vC2, stage 2 conf vol						
vCu, unblocked vol	1092	360			728	
tC, single (s)	6.8	6.9			4.1	
tC, 2 stage (s)						
tF (s)	3.5	3.3			2.2	
p0 queue free %	93	94			97	
cM capacity (veh/h)	147	568			801	

Direction, Lane #	WB 1	NB 1	NB 2	SB 1	SB 2	SB 3
Volume Total	45	502	261	21	602	602
Volume Left	11	0	0	21	0	0
Volume Right	35	0	11	0	0	0
cSH	341	1700	1700	801	1700	1700
Volume to Capacity	0.13	0.30	0.15	0.03	0.35	0.35
Queue Length 95th (ft)	11	0	0	2	0	0
Control Delay (s)	17.2	0.0	0.0	9.6	0.0	0.0
Lane LOS	C			A		
Approach Delay (s)	17.2	0.0		0.2		
Approach LOS	C					

Intersection Summary			
Average Delay	0.5		
Intersection Capacity Utilization	48.9%	ICU Level of Service	A
Analysis Period (min)	15		

Movement	EBL	EBT	EBR	WBL	WBT	WBR	NBL	NBT	NBR	SBL	SBT	SBR
Lane Configurations												
Ideal Flow (vphpl)	1900	1900	1900	1900	1900	1900	1900	1900	1900	1900	1900	1900
Total Lost time (s)		4.0		4.0	4.0			4.0		4.0	4.0	
Lane Util. Factor		0.91		1.00	0.95			1.00		1.00	1.00	
Frpb, ped/bikes		1.00		1.00	1.00			0.99		1.00	0.99	
Flpb, ped/bikes		1.00		0.99	1.00			1.00		0.98	1.00	
Frt		0.99		1.00	0.98			0.98		1.00	0.98	
Flt Protected		1.00		0.95	1.00			0.99		0.95	1.00	
Satd. Flow (prot)		4996		1758	3469			1776		1730	1815	
Flt Permitted		0.83		0.41	1.00			0.55		0.40	1.00	
Satd. Flow (perm)		4183		758	3469			978		721	1815	
Volume (vph)	50	480	40	61	622	81	70	209	60	200	313	50
Peak-hour factor, PHF	0.95	0.95	0.95	0.95	0.95	0.95	0.95	0.95	0.95	0.95	0.95	0.95
Adj. Flow (vph)	53	505	42	64	655	85	74	220	63	211	329	53
RTOR Reduction (vph)	0	10	0	0	12	0	0	9	0	0	7	0
Lane Group Flow (vph)	0	590	0	64	728	0	0	348	0	211	375	0
Confl. Peds. (#/hr)	24		18	18		24	24		48	48		24
Turn Type	Perm			Perm			Perm			Perm		
Protected Phases		4			8			2			6	
Permitted Phases	4			8			2			6		
Actuated Green, G (s)		51.0		51.0	51.0			24.0		24.0	24.0	
Effective Green, g (s)		52.0		52.0	52.0			25.0		25.0	25.0	
Actuated g/C Ratio		0.61		0.61	0.61			0.29		0.29	0.29	
Clearance Time (s)		5.0		5.0	5.0			5.0		5.0	5.0	
Lane Grp Cap (vph)		2559		464	2122			288		212	534	
v/s Ratio Prot					c0.21						0.21	
v/s Ratio Perm		0.14		0.08				c0.36		0.29		
v/c Ratio		0.23		0.14	0.34			1.21		1.00	0.70	
Uniform Delay, d1		7.5		7.0	8.1			30.0		29.9	26.7	
Progression Factor		1.00		1.00	1.00			1.00		1.00	1.00	
Incremental Delay, d2		0.2		0.6	0.4			121.4		60.6	7.5	
Delay (s)		7.7		7.6	8.5			151.4		90.6	34.2	
Level of Service		A		A	A			F		F	C	
Approach Delay (s)		7.7			8.5			151.4			54.3	
Approach LOS		A			A			F			D	

Intersection Summary			
HCM Average Control Delay	41.5	HCM Level of Service	D
HCM Volume to Capacity ratio	0.62		
Actuated Cycle Length (s)	85.0	Sum of lost time (s)	8.0
Intersection Capacity Utilization	100.7%	ICU Level of Service	G
Analysis Period (min)	15		
c Critical Lane Group			

Movement	EBL	EBT	EBR	WBL	WBT	WBR	NBL	NBT	NBR	SBL	SBT	SBR
Lane Configurations												
Ideal Flow (vphpl)	1900	1900	1900	1900	1900	1900	1900	1900	1900	1900	1900	1900
Total Lost time (s)		4.0			4.0		4.0	4.0		4.0	4.0	
Lane Util. Factor		0.91			0.91		1.00	1.00		1.00	1.00	
Frpb, ped/bikes		1.00			1.00		1.00	0.99		1.00	1.00	
Flpb, ped/bikes		1.00			1.00		0.99	1.00		0.99	1.00	
Frt		1.00			0.98		1.00	0.96		1.00	0.98	
Flt Protected		1.00			1.00		0.95	1.00		0.95	1.00	
Satd. Flow (prot)		5047			4979		1757	1768		1749	1830	
Flt Permitted		0.88			0.84		0.33	1.00		0.37	1.00	
Satd. Flow (perm)		4467			4217		604	1768		684	1830	
Volume (vph)	30	710	20	51	664	91	50	199	77	90	271	30
Peak-hour factor, PHF	0.95	0.95	0.95	0.95	0.95	0.95	0.95	0.95	0.95	0.95	0.95	0.95
Adj. Flow (vph)	32	747	21	54	699	96	53	209	81	95	285	32
RTOR Reduction (vph)	0	4	0	0	20	0	0	17	0	0	5	0
Lane Group Flow (vph)	0	796	0	0	829	0	53	273	0	95	312	0
Confl. Peds. (#/hr)			18	18			12		18	18		12
Turn Type	Perm			Perm			Perm			Perm		
Protected Phases		4			8			2			6	
Permitted Phases	4			8			2			6		
Actuated Green, G (s)		50.0			50.0		19.0	19.0		19.0	19.0	
Effective Green, g (s)		51.5			51.5		20.5	20.5		20.5	20.5	
Actuated g/C Ratio		0.64			0.64		0.26	0.26		0.26	0.26	
Clearance Time (s)		5.5			5.5		5.5	5.5		5.5	5.5	
Lane Grp Cap (vph)		2876			2715		155	453		175	469	
v/s Ratio Prot								0.15			c0.17	
v/s Ratio Perm		0.18			c0.20		0.09			0.14		
v/c Ratio		0.28			0.31		0.34	0.60		0.54	0.66	
Uniform Delay, d1		6.2			6.3		24.3	26.2		25.7	26.7	
Progression Factor		1.00			0.43		1.00	1.00		1.20	1.21	
Incremental Delay, d2		0.2			0.3		5.9	5.8		11.3	7.1	
Delay (s)		6.4			3.0		30.2	32.0		42.0	39.5	
Level of Service		A			A		C	C		D	D	
Approach Delay (s)		6.4			3.0			31.7			40.0	
Approach LOS		A			A			C			D	

Intersection Summary			
HCM Average Control Delay	14.6	HCM Level of Service	B
HCM Volume to Capacity ratio	0.41		
Actuated Cycle Length (s)	80.0	Sum of lost time (s)	8.0
Intersection Capacity Utilization	64.7%	ICU Level of Service	C
Analysis Period (min)	15		
c Critical Lane Group			

Movement	EBL	EBT	EBR	WBL	WBT	WBR	NBL	NBT	NBR	SBL	SBT	SBR
Lane Configurations												
Ideal Flow (vphpl)	1900	1900	1900	1900	1900	1900	1900	1900	1900	1900	1900	1900
Total Lost time (s)		4.0			4.0			4.0			4.0	
Lane Util. Factor		0.91			0.91			0.95			0.95	
Frpb, ped/bikes		1.00			1.00			0.99			1.00	
Flpb, ped/bikes		1.00			1.00			1.00			1.00	
Frt		0.99			0.98			0.97			0.99	
Flt Protected		1.00			1.00			0.99			0.99	
Satd. Flow (prot)		5025			4944			3400			3426	
Flt Permitted		0.81			0.83			0.84			0.77	
Satd. Flow (perm)		4087			4102			2867			2666	
Volume (vph)	61	786	40	57	742	136	30	173	46	127	311	44
Peak-hour factor, PHF	0.95	0.95	0.95	0.95	0.95	0.95	0.95	0.95	0.95	0.95	0.95	0.95
Adj. Flow (vph)	64	827	42	60	781	143	32	182	48	134	327	46
RTOR Reduction (vph)	0	6	0	0	30	0	0	24	0	0	10	0
Lane Group Flow (vph)	0	927	0	0	954	0	0	238	0	0	497	0
Confl. Peds. (#/hr)	17		19	19		17	12		16	16		12
Turn Type	Perm			Perm			Perm			Perm		
Protected Phases		4			8			2			6	
Permitted Phases	4			8			2			6		
Actuated Green, G (s)		50.0			50.0			19.0			19.0	
Effective Green, g (s)		51.5			51.5			20.5			20.5	
Actuated g/C Ratio		0.64			0.64			0.26			0.26	
Clearance Time (s)		5.5			5.5			5.5			5.5	
Lane Grp Cap (vph)		2631			2641			735			683	
v/s Ratio Prot												
v/s Ratio Perm		0.23			c0.23			0.08			c0.19	
v/c Ratio		0.35			0.36			0.32			0.73	
Uniform Delay, d1		6.6			6.6			24.1			27.2	
Progression Factor		0.74			1.26			1.00			0.47	
Incremental Delay, d2		0.4			0.4			1.2			6.5	
Delay (s)		5.2			8.7			25.3			19.4	
Level of Service		A			A			C			B	
Approach Delay (s)		5.2			8.7			25.3			19.4	
Approach LOS		A			A			C			B	

Intersection Summary			
HCM Average Control Delay	11.1	HCM Level of Service	B
HCM Volume to Capacity ratio	0.47		
Actuated Cycle Length (s)	80.0	Sum of lost time (s)	8.0
Intersection Capacity Utilization	100.5%	ICU Level of Service	G
Analysis Period (min)	15		
c Critical Lane Group			

Movement	EBL	EBT	EBR	WBL	WBT	WBR	NBL	NBT	NBR	SBL	SBT	SBR
Lane Configurations												
Ideal Flow (vphpl)	1900	1900	1900	1900	1900	1900	1900	1900	1900	1900	1900	1900
Total Lost time (s)		4.0			4.0			4.0			4.0	
Lane Util. Factor		0.91			0.91			1.00			1.00	
Frpb, ped/bikes		1.00			0.97			1.00			0.95	
Flpb, ped/bikes		1.00			1.00			1.00			1.00	
Frt		1.00			0.98			0.93			0.92	
Flt Protected		1.00			1.00			0.98			0.98	
Satd. Flow (prot)		5069			4875			1695			1594	
Flt Permitted		0.88			0.93			0.89			0.85	
Satd. Flow (perm)		4484			4525			1546			1388	
Volume (vph)	31	938	10	10	863	98	10	0	10	54	0	73
Peak-hour factor, PHF	0.95	0.95	0.95	0.95	0.95	0.95	0.95	0.95	0.95	0.95	0.95	0.95
Adj. Flow (vph)	33	987	11	11	908	103	11	0	11	57	0	77
RTOR Reduction (vph)	0	1	0	0	0	0	0	10	0	0	0	0
Lane Group Flow (vph)	0	1030	0	0	1022	0	0	12	0	0	134	0
Confl. Peds. (#/hr)						98						98
Turn Type	Perm			Perm			Perm			Perm		
Protected Phases		4			8			2			6	
Permitted Phases	4			8			2			6		
Actuated Green, G (s)		61.1			61.1			10.9			10.9	
Effective Green, g (s)		61.1			61.1			10.9			10.9	
Actuated g/C Ratio		0.76			0.76			0.14			0.14	
Clearance Time (s)		4.0			4.0			4.0			4.0	
Vehicle Extension (s)		3.0			3.0			3.0			3.0	
Lane Grp Cap (vph)		3425			3456			211			189	
v/s Ratio Prot												
v/s Ratio Perm		c0.23			0.23			0.01			c0.10	
v/c Ratio		0.30			0.30			0.06			0.71	
Uniform Delay, d1		2.9			2.9			30.1			33.0	
Progression Factor		1.02			1.00			1.00			0.56	
Incremental Delay, d2		0.2			0.2			0.1			10.8	
Delay (s)		3.2			3.1			30.2			29.3	
Level of Service		A			A			C			C	
Approach Delay (s)		3.2			3.1			30.2			29.3	
Approach LOS		A			A			C			C	

Intersection Summary			
HCM Average Control Delay	5.0	HCM Level of Service	A
HCM Volume to Capacity ratio	0.36		
Actuated Cycle Length (s)	80.0	Sum of lost time (s)	8.0
Intersection Capacity Utilization	71.4%	ICU Level of Service	C
Analysis Period (min)	15		
c Critical Lane Group			

Movement	EBL	EBT	EBR	WBL	WBT	WBR	NBL	NBT	NBR	SBL	SBT	SBR
Lane Configurations												
Ideal Flow (vphpl)	1900	1900	1900	1900	1900	1900	1900	1900	1900	1900	1900	1900
Total Lost time (s)		4.0			4.0		4.0	4.0		4.0	4.0	
Lane Util. Factor		0.91			0.91		1.00	0.95		1.00	0.95	
Frpb, ped/bikes		1.00			0.99		1.00	0.99		1.00	0.99	
Flpb, ped/bikes		1.00			1.00		0.99	1.00		0.98	1.00	
Frt		0.98			0.97		1.00	0.97		1.00	0.97	
Flt Protected		0.99			0.99		0.95	1.00		0.95	1.00	
Satd. Flow (prot)		4953			4860		1760	3424		1743	3409	
Flt Permitted		0.65			0.67		0.24	1.00		0.45	1.00	
Satd. Flow (perm)		3255			3287		445	3424		817	3409	
Volume (vph)	137	758	107	110	717	197	70	390	80	283	706	174
Peak-hour factor, PHF	0.95	0.95	0.95	0.95	0.95	0.95	0.95	0.95	0.95	0.95	0.95	0.95
Adj. Flow (vph)	144	798	113	116	755	207	74	411	84	298	743	183
RTOR Reduction (vph)	0	21	0	0	74	0	0	13	0	0	17	0
Lane Group Flow (vph)	0	1034	0	0	1004	0	74	482	0	298	909	0
Confl. Peds. (#/hr)	40		9			40	25		31	31		25
Turn Type	Perm			pm+pt			Perm			Perm		
Protected Phases		4		3	8			2			6	
Permitted Phases	4			8			2			6		
Actuated Green, G (s)		29.0			29.0		45.5	45.5		45.5	45.5	
Effective Green, g (s)		30.5			30.5		46.5	46.5		46.5	46.5	
Actuated g/C Ratio		0.36			0.36		0.55	0.55		0.55	0.55	
Clearance Time (s)		5.5			5.5		5.0	5.0		5.0	5.0	
Vehicle Extension (s)		2.0			2.0		2.0	2.0		2.0	2.0	
Lane Grp Cap (vph)		1168			1179		243	1873		447	1865	
v/s Ratio Prot								0.14			0.27	
v/s Ratio Perm		c0.32			0.31		0.17			c0.36		
v/c Ratio		0.89			0.85		0.30	0.26		0.67	0.49	
Uniform Delay, d1		25.6			25.2		10.5	10.1		13.7	11.9	
Progression Factor		1.00			1.00		1.42	1.39		1.30	1.45	
Incremental Delay, d2		8.1			5.9		3.1	0.3		5.7	0.7	
Delay (s)		33.7			31.0		17.9	14.5		23.6	17.9	
Level of Service		C			C		B	B		C	B	
Approach Delay (s)		33.7			31.0			14.9			19.3	
Approach LOS		C			C			B			B	

Intersection Summary			
HCM Average Control Delay	25.7	HCM Level of Service	C
HCM Volume to Capacity ratio	0.75		
Actuated Cycle Length (s)	85.0	Sum of lost time (s)	8.0
Intersection Capacity Utilization	90.9%	ICU Level of Service	E
Analysis Period (min)	15		

c Critical Lane Group

Movement	EBL	EBT	EBR	WBL	WBT	WBR	NBL	NBT	NBR	SBL	SBT	SBR
Lane Configurations												
Ideal Flow (vphpl)	1900	1900	1900	1900	1900	1900	1900	1900	1900	1900	1900	1900
Total Lost time (s)		4.0			4.0			4.0	4.0		4.0	
Lane Util. Factor		0.91			0.91			1.00	1.00		1.00	
Frpb, ped/bikes		1.00			0.99			1.00	0.88		0.97	
Flpb, ped/bikes		1.00			1.00			0.97	1.00		0.95	
Frt		1.00			0.99			1.00	0.85		0.96	
Flt Protected		1.00			1.00			0.98	1.00		0.97	
Satd. Flow (prot)		5040			4984			1768	1395		1607	
Flt Permitted		0.88			0.88			0.87	1.00		0.82	
Satd. Flow (perm)		4449			4374			1571	1395		1353	
Volume (vph)	30	1088	33	30	989	80	25	36	20	80	30	40
Peak-hour factor, PHF	0.95	0.95	0.95	0.95	0.95	0.95	0.95	0.95	0.95	0.95	0.95	0.95
Adj. Flow (vph)	32	1145	35	32	1041	84	26	38	21	84	32	42
RTOR Reduction (vph)	0	4	0	0	11	0	0	0	15	0	16	0
Lane Group Flow (vph)	0	1208	0	0	1146	0	0	64	6	0	142	0
Confl. Peds. (#/hr)	100		100	100		100	100		100	100		100
Turn Type	Perm			Perm			Perm		Perm	Perm		
Protected Phases		4			8			2			6	
Permitted Phases	4			8			2		2	6		
Actuated Green, G (s)		48.0			48.0			23.0	23.0		23.0	
Effective Green, g (s)		48.5			48.5			23.5	23.5		23.5	
Actuated g/C Ratio		0.61			0.61			0.29	0.29		0.29	
Clearance Time (s)		4.5			4.5			4.5	4.5		4.5	
Lane Grp Cap (vph)		2697			2652			461	410		397	
v/s Ratio Prot												
v/s Ratio Perm		c0.27			0.26			0.04	0.00		c0.10	
v/c Ratio		0.45			0.43			0.14	0.02		0.36	
Uniform Delay, d1		8.5			8.4			20.8	20.0		22.3	
Progression Factor		1.00			1.00			1.00	1.00		1.00	
Incremental Delay, d2		0.5			0.5			0.6	0.1		2.5	
Delay (s)		9.1			8.9			21.4	20.1		24.8	
Level of Service		A			A			C	C		C	
Approach Delay (s)		9.1			8.9			21.1			24.8	
Approach LOS		A			A			C			C	

Intersection Summary			
HCM Average Control Delay	10.3	HCM Level of Service	B
HCM Volume to Capacity ratio	0.42		
Actuated Cycle Length (s)	80.0	Sum of lost time (s)	8.0
Intersection Capacity Utilization	81.7%	ICU Level of Service	D
Analysis Period (min)	15		

c Critical Lane Group

Movement	EBL	EBT	EBR	WBL	WBT	WBR	NBL	NBT	NBR	SBL	SBT	SBR
Lane Configurations												
Ideal Flow (vphpl)	1900	1900	1900	1900	1900	1900	1900	1900	1900	1900	1900	1900
Total Lost time (s)	4.0	4.0		4.0	4.0		4.0	4.0	4.0	4.0	4.0	4.0
Lane Util. Factor	1.00	0.91		1.00	0.91		1.00	0.95	1.00	1.00	0.95	1.00
Frpb, ped/bikes	1.00	0.99		1.00	0.99		1.00	1.00	0.95	1.00	1.00	0.96
Flpb, ped/bikes	1.00	1.00		1.00	1.00		1.00	1.00	1.00	1.00	1.00	1.00
Frt	1.00	0.98		1.00	0.96		1.00	1.00	0.85	1.00	1.00	0.85
Flt Protected	0.95	1.00		0.95	1.00		0.95	1.00	1.00	0.95	1.00	1.00
Satd. Flow (prot)	1770	4908		1770	4819		1770	3539	1511	1770	3539	1523
Flt Permitted	0.95	1.00		0.95	1.00		0.95	1.00	1.00	0.95	1.00	1.00
Satd. Flow (perm)	1770	4908		1770	4819		1770	3539	1511	1770	3539	1523
Volume (vph)	160	896	141	150	759	280	110	302	110	310	1151	150
Peak-hour factor, PHF	0.95	0.95	0.95	0.95	0.95	0.95	0.95	0.95	0.95	0.95	0.95	0.95
Adj. Flow (vph)	168	943	148	158	799	295	116	318	116	326	1212	158
RTOR Reduction (vph)	0	17	0	0	56	0	0	0	51	0	0	33
Lane Group Flow (vph)	168	1074	0	158	1038	0	116	318	65	326	1212	125
Confl. Peds. (#/hr)			66			23			38			26
Turn Type	Prot			Prot			Prot		pm+ov	Prot		pm+ov
Protected Phases	7	4		3	8		5	2	3	1	6	7
Permitted Phases									2			6
Actuated Green, G (s)	12.0	34.0		13.6	35.6		10.4	31.4	45.0	25.0	46.0	58.0
Effective Green, g (s)	11.0	35.0		12.6	36.6		9.4	32.4	45.0	24.0	47.0	58.0
Actuated g/C Ratio	0.09	0.29		0.10	0.31		0.08	0.27	0.38	0.20	0.39	0.48
Clearance Time (s)	3.0	5.0		3.0	5.0		3.0	5.0	3.0	3.0	5.0	3.0
Vehicle Extension (s)	2.0	2.0		2.0	2.0		2.0	2.0	2.0	2.0	2.0	2.0
Lane Grp Cap (vph)	162	1432		186	1470		139	956	617	354	1386	787
v/s Ratio Prot	c0.09	c0.22		0.09	0.22		0.07	0.09	0.01	c0.18	c0.34	0.01
v/s Ratio Perm									0.03			0.07
v/c Ratio	1.04	0.75		0.85	0.71		0.83	0.33	0.11	0.92	0.87	0.16
Uniform Delay, d1	54.5	38.5		52.8	36.9		54.5	35.1	24.4	47.1	33.8	17.4
Progression Factor	1.00	1.00		1.00	1.00		1.00	1.00	1.00	1.00	1.00	1.00
Incremental Delay, d2	80.8	3.7		27.6	2.9		31.8	0.9	0.0	28.3	7.9	0.0
Delay (s)	135.3	42.2		80.4	39.8		86.3	36.1	24.4	75.3	41.7	17.4
Level of Service	F	D		F	D		F	D	C	E	D	B
Approach Delay (s)		54.6			44.9			44.2			45.9	
Approach LOS		D			D			D			D	

Intersection Summary			
HCM Average Control Delay	47.8	HCM Level of Service	D
HCM Volume to Capacity ratio	0.84		
Actuated Cycle Length (s)	120.0	Sum of lost time (s)	12.0
Intersection Capacity Utilization	82.5%	ICU Level of Service	E
Analysis Period (min)	15		

c Critical Lane Group

Movement	EBL	EBT	EBR	WBL	WBT	WBR	NBL	NBT	NBR	SBL	SBT	SBR
Lane Configurations												
Ideal Flow (vphpl)	1900	1900	1900	1900	1900	1900	1900	1900	1900	1900	1900	1900
Total Lost time (s)		4.0			4.0		4.0	4.0		4.0	4.0	
Lane Util. Factor		1.00			1.00		1.00	0.95		1.00	0.95	
Frpb, ped/bikes		0.93			0.95		1.00	0.99		1.00	0.99	
Flpb, ped/bikes		0.97			0.96		0.94	1.00		0.93	1.00	
Frt		0.95			0.95		1.00	0.99		1.00	0.99	
Flt Protected		0.98			0.99		0.95	1.00		0.95	1.00	
Satd. Flow (prot)		1582			1600		1663	3460		1645	3467	
Flt Permitted		0.70			0.86		0.37	1.00		0.41	1.00	
Satd. Flow (perm)		1133			1398		643	3460		711	3467	
Volume (vph)	44	30	40	50	60	70	60	556	40	32	648	42
Peak-hour factor, PHF	0.95	0.95	0.95	0.95	0.95	0.95	0.95	0.95	0.95	0.95	0.95	0.95
Adj. Flow (vph)	46	32	42	53	63	74	63	585	42	34	682	44
RTOR Reduction (vph)	0	27	0	0	32	0	0	4	0	0	4	0
Lane Group Flow (vph)	0	93	0	0	158	0	63	623	0	34	722	0
Confl. Peds. (#/hr)	100		100	100		100	100		100	100		100
Turn Type	Perm			Perm			Perm			Perm		
Protected Phases		4			4			2			6	
Permitted Phases	4			4			2			6		
Actuated Green, G (s)		12.9			12.9		65.1	65.1		65.1	65.1	
Effective Green, g (s)		12.4			12.4		64.6	64.6		64.6	64.6	
Actuated g/C Ratio		0.15			0.15		0.76	0.76		0.76	0.76	
Clearance Time (s)		3.5			3.5		3.5	3.5		3.5	3.5	
Vehicle Extension (s)		2.0			2.0		2.0	2.0		2.0	2.0	
Lane Grp Cap (vph)		165			204		489	2630		540	2635	
v/s Ratio Prot								0.18			c0.21	
v/s Ratio Perm		0.08			c0.11		0.10			0.05		
v/c Ratio		0.56			0.77		0.13	0.24		0.06	0.27	
Uniform Delay, d1		33.8			34.9		2.7	3.0		2.6	3.1	
Progression Factor		1.00			1.00		1.00	1.00		0.81	0.68	
Incremental Delay, d2		2.6			15.1		0.5	0.2		0.2	0.2	
Delay (s)		36.4			50.1		3.3	3.2		2.3	2.3	
Level of Service		D			D		A	A		A	A	
Approach Delay (s)		36.4			50.1			3.2			2.3	
Approach LOS		D			D			A			A	

Intersection Summary			
HCM Average Control Delay	10.1	HCM Level of Service	B
HCM Volume to Capacity ratio	0.35		
Actuated Cycle Length (s)	85.0	Sum of lost time (s)	8.0
Intersection Capacity Utilization	54.8%	ICU Level of Service	A
Analysis Period (min)	15		

c Critical Lane Group

Movement	EBL	EBT	EBR	WBL	WBT	WBR	NBL	NBT	NBR	SBL	SBT	SBR
Lane Configurations												
Ideal Flow (vphpl)	1900	1900	1900	1900	1900	1900	1900	1900	1900	1900	1900	1900
Total Lost time (s)	4.0	4.0		4.0	4.0		4.0	4.0		4.0	4.0	
Lane Util. Factor	1.00	0.95		1.00	0.95		1.00	0.95		1.00	0.95	
Frpb, ped/bikes	1.00	0.97		1.00	0.94		1.00	0.99		1.00	0.95	
Flpb, ped/bikes	1.00	1.00		1.00	1.00		0.96	1.00		0.95	1.00	
Frt	1.00	0.97		1.00	0.96		1.00	0.98		1.00	0.96	
Flt Protected	0.95	1.00		0.95	1.00		0.95	1.00		0.95	1.00	
Satd. Flow (prot)	1770	3347		1770	3196		1691	3449		1680	3220	
Flt Permitted	0.95	1.00		0.95	1.00		0.27	1.00		0.48	1.00	
Satd. Flow (perm)	1770	3347		1770	3196		484	3449		847	3220	
Volume (vph)	260	400	100	70	370	142	70	354	40	91	527	210
Peak-hour factor, PHF	0.95	0.95	0.95	0.95	0.95	0.95	0.95	0.95	0.95	0.95	0.95	0.95
Adj. Flow (vph)	274	421	105	74	389	149	74	373	42	96	555	221
RTOR Reduction (vph)	0	24	0	0	51	0	0	9	0	0	42	0
Lane Group Flow (vph)	274	502	0	74	487	0	74	406	0	96	734	0
Confl. Peds. (#/hr)			100			100	100		100	100		100
Turn Type	Prot			Prot			Perm			Perm		
Protected Phases	7	4		3	8			2			6	
Permitted Phases							2			6		
Actuated Green, G (s)	16.1	26.9		6.8	17.6		37.8	37.8		37.8	37.8	
Effective Green, g (s)	16.6	26.4		7.3	17.1		39.3	39.3		39.3	39.3	
Actuated g/C Ratio	0.20	0.31		0.09	0.20		0.46	0.46		0.46	0.46	
Clearance Time (s)	4.5	3.5		4.5	3.5		5.5	5.5		5.5	5.5	
Vehicle Extension (s)	2.0	2.0		2.0	2.0		2.0	2.0		2.0	2.0	
Lane Grp Cap (vph)	346	1040		152	643		224	1595		392	1489	
v/s Ratio Prot	c0.15	0.15		0.04	c0.15			0.12			c0.23	
v/s Ratio Perm							0.15			0.11		
v/c Ratio	0.79	0.48		0.49	0.76		0.33	0.25		0.24	0.49	
Uniform Delay, d1	32.6	23.8		37.1	32.0		14.5	13.9		13.9	15.9	
Progression Factor	1.00	1.00		1.00	1.00		1.00	1.00		1.00	1.00	
Incremental Delay, d2	11.0	0.1		0.9	4.5		3.9	0.4		1.5	1.2	
Delay (s)	43.5	23.9		38.0	36.5		18.4	14.3		15.3	17.1	
Level of Service	D	C		D	D		B	B		B	B	
Approach Delay (s)		30.6			36.7			14.9			16.9	
Approach LOS		C			D			B			B	

Intersection Summary			
HCM Average Control Delay	24.9	HCM Level of Service	C
HCM Volume to Capacity ratio	0.62		
Actuated Cycle Length (s)	85.0	Sum of lost time (s)	12.0
Intersection Capacity Utilization	73.5%	ICU Level of Service	D
Analysis Period (min)	15		

c Critical Lane Group

Movement	EBL	EBR	NBL	NBT	SBT	SBR
Lane Configurations						
Ideal Flow (vphpl)	1900	1900	1900	1900	1900	1900
Total Lost time (s)	4.0		4.0	4.0	4.0	
Lane Util. Factor	1.00		1.00	0.95	0.95	
Frt	0.91		1.00	1.00	0.98	
Flt Protected	0.98		0.95	1.00	1.00	
Satd. Flow (prot)	1669		1770	3539	3485	
Flt Permitted	0.98		0.95	1.00	1.00	
Satd. Flow (perm)	1669		1770	3539	3485	
Volume (vph)	63	119	114	635	1067	122
Peak-hour factor, PHF	0.95	0.95	0.95	0.95	0.95	0.95
Adj. Flow (vph)	66	125	120	668	1123	128
RTOR Reduction (vph)	81	0	0	0	7	0
Lane Group Flow (vph)	110	0	120	668	1244	0
Turn Type			Prot			
Protected Phases	2		3	8	4	
Permitted Phases						
Actuated Green, G (s)	21.2		9.1	55.8	42.7	
Effective Green, g (s)	21.2		9.1	55.8	42.7	
Actuated g/C Ratio	0.25		0.11	0.66	0.50	
Clearance Time (s)	4.0		4.0	4.0	4.0	
Vehicle Extension (s)	3.0		3.0	3.0	3.0	
Lane Grp Cap (vph)	416		189	2323	1751	
v/s Ratio Prot	c0.07		c0.07	0.19	c0.36	
v/s Ratio Perm						
v/c Ratio	0.26		0.63	0.29	0.71	
Uniform Delay, d1	25.6		36.4	6.2	16.4	
Progression Factor	1.00		1.01	0.83	0.92	
Incremental Delay, d2	1.5		6.0	0.3	1.9	
Delay (s)	27.2		42.8	5.4	17.0	
Level of Service	C		D	A	B	
Approach Delay (s)	27.2			11.1	17.0	
Approach LOS	C			B	B	

Intersection Summary			
HCM Average Control Delay	15.8	HCM Level of Service	B
HCM Volume to Capacity ratio	0.57		
Actuated Cycle Length (s)	85.0	Sum of lost time (s)	12.0
Intersection Capacity Utilization	60.5%	ICU Level of Service	B
Analysis Period (min)	15		

c Critical Lane Group

Movement	EBL	EBT	EBR	WBL	WBT	WBR	NBL	NBT	NBR	SBL	SBT	SBR
Lane Configurations												
Ideal Flow (vphpl)	1900	1900	1900	1900	1900	1900	1900	1900	1900	1900	1900	1900
Lane Width	12	12	12	12	12	12	16	16	16	16	16	16
Total Lost time (s)	4.0	4.0		4.0	4.0		2.0	2.0		2.0	2.0	
Lane Util. Factor	1.00	0.91		1.00	0.91		1.00	1.00		1.00	1.00	
Frpb, ped/bikes	1.00	0.99		1.00	1.00		1.00	0.99		1.00	0.98	
Flpb, ped/bikes	1.00	1.00		1.00	1.00		1.00	1.00		0.98	1.00	
Frt	1.00	0.98		1.00	0.98		1.00	0.96		1.00	0.93	
Flt Protected	0.95	1.00		0.95	1.00		0.95	1.00		0.95	1.00	
Satd. Flow (prot)	1770	4929		1770	4969		2005	1998		1962	1919	
Flt Permitted	0.95	1.00		0.95	1.00		0.13	1.00		0.54	1.00	
Satd. Flow (perm)	1770	4929		1770	4969		271	1998		1114	1919	
Volume (vph)	340	1232	180	90	1020	150	170	252	90	140	278	270
Peak-hour factor, PHF	0.95	0.95	0.95	0.95	0.95	0.95	0.95	0.95	0.95	0.95	0.95	0.95
Adj. Flow (vph)	358	1297	189	95	1074	158	179	265	95	147	293	284
RTOR Reduction (vph)	0	20	0	0	20	0	0	14	0	0	39	0
Lane Group Flow (vph)	358	1466	0	95	1212	0	179	346	0	147	538	0
Confl. Peds. (#/hr)			32	32		4	12		24	24		12
Parking (#/hr)												0
Turn Type	Prot			Prot			pm+pt			Perm		
Protected Phases	7	4		3	8		5	2			6	
Permitted Phases							2			6		
Actuated Green, G (s)	18.0	35.9		7.5	25.4		39.6	39.6		28.6	28.6	
Effective Green, g (s)	18.0	35.9		7.5	25.4		40.1	40.1		29.1	29.1	
Actuated g/C Ratio	0.19	0.38		0.08	0.27		0.43	0.43		0.31	0.31	
Clearance Time (s)	4.0	4.0		4.0	4.0		4.0	2.5		2.5	2.5	
Vehicle Extension (s)	3.0	3.0		3.0	3.0		3.0	3.0		3.0	3.0	
Lane Grp Cap (vph)	341	1893		142	1350		283	857		347	597	
v/s Ratio Prot	c0.20	0.30		0.05	c0.24		c0.06	0.17			c0.28	
v/s Ratio Perm							0.21			0.13		
v/c Ratio	1.05	0.77		0.67	0.90		0.63	0.40		0.42	0.90	
Uniform Delay, d1	37.8	25.3		41.8	32.8		21.8	18.4		25.5	30.8	
Progression Factor	1.00	1.00		1.00	1.00		1.00	1.00		1.00	1.00	
Incremental Delay, d2	62.4	3.2		11.3	9.7		4.6	0.3		0.8	16.9	
Delay (s)	100.1	28.4		53.1	42.4		26.3	18.8		26.4	47.7	
Level of Service	F	C		D	D		C	B		C	D	
Approach Delay (s)		42.3			43.2			21.3			43.4	
Approach LOS		D			D			C			D	

Intersection Summary					
HCM Average Control Delay	40.2	HCM Level of Service	D		
HCM Volume to Capacity ratio	0.89				
Actuated Cycle Length (s)	93.5	Sum of lost time (s)	12.0		
Intersection Capacity Utilization	96.4%	ICU Level of Service	F		
Analysis Period (min)	15				

c Critical Lane Group

Movement	EBL	EBT	EBR	WBL	WBT	WBR	NBL	NBT	NBR	SBL	SBT	SBR
Lane Configurations												
Ideal Flow (vphpl)	1900	1900	1900	1900	1900	1900	1900	1900	1900	1900	1900	1900
Total Lost time (s)		4.0		4.0	4.0			4.0		4.0	4.0	
Lane Util. Factor		1.00		0.95	0.95			0.95		1.00	0.95	
Frpb, ped/bikes		1.00		1.00	0.97			0.98		1.00	0.95	
Flpb, ped/bikes		0.99		1.00	1.00			1.00		1.00	1.00	
Frt		0.93		1.00	0.92			0.96		1.00	0.95	
Flt Protected		0.99		0.95	1.00			1.00		0.95	1.00	
Satd. Flow (prot)		1705		1681	1578			3315		1770	3192	
Flt Permitted		0.36		0.73	1.00			0.94		0.95	1.00	
Satd. Flow (perm)		619		1290	1578			3128		1770	3192	
Volume (vph)	10	10	20	116	110	120	10	1142	489	120	816	410
Peak-hour factor, PHF	0.95	0.95	0.95	0.95	0.95	0.95	0.95	0.95	0.95	0.95	0.95	0.95
Adj. Flow (vph)	11	11	21	122	116	126	11	1202	515	126	859	432
RTOR Reduction (vph)	0	20	0	0	43	0	0	39	0	0	51	0
Lane Group Flow (vph)	0	23	0	122	199	0	0	1689	0	126	1240	0
Confl. Peds. (#/hr)	36					36	48		16	16		48
Turn Type	Perm			Perm			Perm			Prot		
Protected Phases		7			8			2		1	6	
Permitted Phases	7			8			2					
Actuated Green, G (s)		6.5		16.0	16.0			48.7		10.8	64.0	
Effective Green, g (s)		7.0		16.5	16.5			49.2		11.3	64.5	
Actuated g/C Ratio		0.07		0.16	0.16			0.49		0.11	0.64	
Clearance Time (s)		4.5		4.5	4.5			4.5		4.5	4.5	
Vehicle Extension (s)		2.0		2.0	2.0			2.0		2.0	2.0	
Lane Grp Cap (vph)		43		213	260			1539		200	2059	
v/s Ratio Prot										0.07	c0.39	
v/s Ratio Perm		c0.04		0.09	0.13			c0.54				
v/c Ratio		0.55		0.57	0.77			1.10		0.63	0.60	
Uniform Delay, d1		45.0		38.5	39.9			25.4		42.4	10.3	
Progression Factor		1.00		1.00	1.00			0.59		1.00	1.00	
Incremental Delay, d2		7.4		2.3	11.5			45.1		4.7	1.3	
Delay (s)		52.3		40.8	51.4			60.2		47.0	11.6	
Level of Service		D		D	D			E		D	B	
Approach Delay (s)		52.3			47.9			60.2			14.8	
Approach LOS		D			D			E			B	

Intersection Summary					
HCM Average Control Delay	40.7	HCM Level of Service	D		
HCM Volume to Capacity ratio	0.93				
Actuated Cycle Length (s)	100.0	Sum of lost time (s)	16.0		
Intersection Capacity Utilization	111.9%	ICU Level of Service	H		
Analysis Period (min)	15				

c Critical Lane Group

Movement	EBL	EBT	EBR	WBL	WBT	WBR	NBL	NBT	NBR	SBL	SBT	SBR
Lane Configurations												
Ideal Flow (vphpl)	1900	1900	1900	1900	1900	1900	1900	1900	1900	1900	1900	1900
Total Lost time (s)	4.0	4.0		4.0	4.0		4.0	4.0		4.0	4.0	
Lane Util. Factor	0.97	0.95		1.00	0.95		1.00	0.95		1.00	0.95	
Frpb, ped/bikes	1.00	0.99		1.00	0.99		1.00	0.97		1.00	0.98	
Flpb, ped/bikes	1.00	1.00		1.00	1.00		1.00	1.00		1.00	1.00	
Frt	1.00	0.99		1.00	0.95		1.00	0.97		1.00	0.99	
Flt Protected	0.95	1.00		0.95	1.00		0.95	1.00		0.95	1.00	
Satd. Flow (prot)	3433	3456		1770	3308		1770	3325		1770	3413	
Flt Permitted	0.95	1.00		0.95	1.00		0.95	1.00		0.95	1.00	
Satd. Flow (perm)	3433	3456		1770	3308		1770	3325		1770	3413	
Volume (vph)	460	880	82	120	510	290	90	911	260	220	682	60
Peak-hour factor, PHF	0.95	0.95	0.95	0.95	0.95	0.95	0.95	0.95	0.95	0.95	0.95	0.95
Adj. Flow (vph)	484	926	86	126	537	305	95	959	274	232	718	63
RTOR Reduction (vph)	0	7	0	0	79	0	0	27	0	0	7	0
Lane Group Flow (vph)	484	1005	0	126	763	0	95	1206	0	232	774	0
Confl. Peds. (#/hr)	15		48	48		15	123		48	48		123
Turn Type	Prot			Prot			Prot			Prot		
Protected Phases	7	4		3	8		5	2		1	6	
Permitted Phases												
Actuated Green, G (s)	15.7	28.3		10.0	22.6		5.0	32.7		12.0	39.7	
Effective Green, g (s)	15.2	29.3		9.5	23.6		4.5	33.7		11.5	40.7	
Actuated g/C Ratio	0.15	0.29		0.10	0.24		0.04	0.34		0.12	0.41	
Clearance Time (s)	3.5	5.0		3.5	5.0		3.5	5.0		3.5	5.0	
Vehicle Extension (s)	2.0	2.0		2.0	2.0		2.0	2.0		2.0	2.0	
Lane Grp Cap (vph)	522	1013		168	781		80	1121		204	1389	
v/s Ratio Prot	c0.14	c0.29		0.07	0.23		0.05	c0.36		c0.13	0.23	
v/s Ratio Perm												
v/c Ratio	0.93	0.99		0.75	0.98		1.19	1.08		1.14	0.56	
Uniform Delay, d1	41.9	35.2		44.1	37.9		47.8	33.1		44.2	22.7	
Progression Factor	1.00	1.00		1.00	1.00		1.00	1.00		1.22	0.74	
Incremental Delay, d2	22.3	26.2		15.3	26.1		159.7	49.9		98.6	1.3	
Delay (s)	64.2	61.4		59.4	64.0		207.4	83.0		152.5	18.2	
Level of Service	E	E		E	E		F	F		F	B	
Approach Delay (s)		62.3			63.4			91.9			49.0	
Approach LOS		E			E			F			D	

Intersection Summary			
HCM Average Control Delay	67.9	HCM Level of Service	E
HCM Volume to Capacity ratio	1.02		
Actuated Cycle Length (s)	100.0	Sum of lost time (s)	12.0
Intersection Capacity Utilization	96.9%	ICU Level of Service	F
Analysis Period (min)	15		

c Critical Lane Group

Movement	EBL	EBT	EBR	WBL	WBT	WBR	NBL	NBT	NBR	SBL	SBT	SBR
Lane Configurations												
Ideal Flow (vphpl)	1900	1900	1900	1900	1900	1900	1900	1900	1900	1900	1900	1900
Total Lost time (s)		4.0						4.0		4.0	4.0	
Lane Util. Factor		1.00						0.95		0.97	0.95	
Frt		0.86						0.94		1.00	0.98	
Flt Protected		1.00						1.00		0.95	1.00	
Satd. Flow (prot)		1611						3316		3433	3452	
Flt Permitted		1.00						0.95		0.95	1.00	
Satd. Flow (perm)		1611						3144		3433	3452	
Volume (vph)	0	0	10	0	0	0	10	419	306	1500	306	60
Peak-hour factor, PHF	0.95	0.95	0.95	0.95	0.95	0.95	0.95	0.95	0.95	0.95	0.95	0.95
Adj. Flow (vph)	0	0	11	0	0	0	11	441	322	1579	322	63
RTOR Reduction (vph)	0	11	0	0	0	0	0	20	0	0	0	0
Lane Group Flow (vph)	0	0	0	0	0	0	0	754	0	1579	385	0
Turn Type							Perm			Prot		
Protected Phases								2		1	6	
Permitted Phases							2					
Actuated Green, G (s)		0.0						13.0		29.0	50.0	
Effective Green, g (s)		0.0						13.0		29.0	50.0	
Actuated g/C Ratio		0.00						0.26		0.58	1.00	
Clearance Time (s)								4.0		4.0	2.0	
Lane Grp Cap (vph)		0						817		1991	3452	
v/s Ratio Prot										c0.46	0.11	
v/s Ratio Perm								c0.24				
v/c Ratio		0.00						0.92		0.79	0.11	
Uniform Delay, d1		25.0						18.0		8.2	0.0	
Progression Factor		1.00						0.73		1.00	1.00	
Incremental Delay, d2		0.0						16.6		3.3	0.1	
Delay (s)		25.0						29.8		11.5	0.1	
Level of Service		C						C		B	A	
Approach Delay (s)		25.0			0.0			29.8			9.3	
Approach LOS		C			A			C			A	

Intersection Summary			
HCM Average Control Delay	15.1	HCM Level of Service	B
HCM Volume to Capacity ratio	0.83		
Actuated Cycle Length (s)	50.0	Sum of lost time (s)	8.0
Intersection Capacity Utilization	77.8%	ICU Level of Service	D
Analysis Period (min)	15		

c Critical Lane Group

Movement	EBL	EBT	EBR	WBL	WBT	WBR	NBL	NBT	NBR	SBL	SBT	SBR
Lane Configurations												
Ideal Flow (vphpl)	1900	1900	1900	1900	1900	1900	1900	1900	1900	1900	1900	1900
Total Lost time (s)		4.0			4.0			4.0			4.0	
Lane Util. Factor		1.00			1.00			0.95			0.95	
Frpb, ped/bikes		0.97			0.97			0.99			0.99	
Flpb, ped/bikes		0.98			0.97			1.00			0.99	
Frt		0.97			0.96			0.98			0.99	
Flt Protected		0.99			0.99			1.00			0.99	
Satd. Flow (prot)		1695			1658			3412			3442	
Flt Permitted		0.88			0.92			0.93			0.82	
Satd. Flow (perm)		1518			1540			3171			2843	
Volume (vph)	30	50	21	50	100	70	33	575	80	50	276	20
Peak-hour factor, PHF	0.95	0.95	0.95	0.95	0.95	0.95	0.95	0.95	0.95	0.95	0.95	0.95
Adj. Flow (vph)	32	53	22	53	105	74	35	605	84	53	291	21
RTOR Reduction (vph)	0	15	0	0	34	0	0	21	0	0	9	0
Lane Group Flow (vph)	0	92	0	0	198	0	0	704	0	0	356	0
Confl. Peds. (#/hr)	100		100	100		100	100		100	100		100
Turn Type	Perm			Perm			Perm			Perm		
Protected Phases		4			8			2			6	
Permitted Phases	4			8			2			6		
Actuated Green, G (s)		17.0			17.0			25.0			25.0	
Effective Green, g (s)		17.0			17.0			25.0			25.0	
Actuated g/C Ratio		0.34			0.34			0.50			0.50	
Clearance Time (s)		4.0			4.0			4.0			4.0	
Lane Grp Cap (vph)		516			524			1586			1422	
v/s Ratio Prot												
v/s Ratio Perm		0.06			c0.13			c0.22			0.13	
v/c Ratio		0.18			0.38			0.44			0.25	
Uniform Delay, d1		11.6			12.5			8.0			7.1	
Progression Factor		1.00			1.00			1.00			1.00	
Incremental Delay, d2		0.8			2.1			0.9			0.4	
Delay (s)		12.4			14.6			8.9			7.6	
Level of Service		B			B			A			A	
Approach Delay (s)		12.4			14.6			8.9			7.6	
Approach LOS		B			B			A			A	

Intersection Summary			
HCM Average Control Delay	9.8	HCM Level of Service	A
HCM Volume to Capacity ratio	0.42		
Actuated Cycle Length (s)	50.0	Sum of lost time (s)	8.0
Intersection Capacity Utilization	68.6%	ICU Level of Service	C
Analysis Period (min)	15		
c Critical Lane Group			

Movement	EBL	EBT	EBR	WBL	WBT	WBR	NBL	NBT	NBR	SBL	SBT	SBR
Lane Configurations												
Ideal Flow (vphpl)	1900	1900	1900	1900	1900	1900	1900	1900	1900	1900	1900	1900
Total Lost time (s)		4.0			4.0			4.0			4.0	
Lane Util. Factor		1.00			1.00			0.95			0.91	
Frpb, ped/bikes		0.95			0.97			0.99			0.98	
Flpb, ped/bikes		0.97			0.98			1.00			1.00	
Frt		0.95			0.97			0.99			0.99	
Flt Protected		0.98			0.99			1.00			1.00	
Satd. Flow (prot)		1619			1680			3465			4929	
Flt Permitted		0.80			0.82			0.87			0.85	
Satd. Flow (perm)		1320			1399			3013			4195	
Volume (vph)	60	60	60	33	60	30	50	1523	65	30	971	70
Peak-hour factor, PHF	0.95	0.95	0.95	0.95	0.95	0.95	0.95	0.95	0.95	0.95	0.95	0.95
Adj. Flow (vph)	63	63	63	35	63	32	53	1603	68	32	1022	74
RTOR Reduction (vph)	0	29	0	0	5	0	0	2	0	0	5	0
Lane Group Flow (vph)	0	160	0	0	125	0	0	1722	0	0	1123	0
Confl. Peds. (#/hr)	100		100	100		100	100		100	100		100
Turn Type	Perm			Perm			Perm			Perm		
Protected Phases		4			4			2			6	
Permitted Phases	4			4			2			6		
Actuated Green, G (s)		12.1			12.1			58.9			58.9	
Effective Green, g (s)		12.6			12.6			59.4			59.4	
Actuated g/C Ratio		0.16			0.16			0.74			0.74	
Clearance Time (s)		4.5			4.5			4.5			4.5	
Vehicle Extension (s)		2.0			2.0			2.0			2.0	
Lane Grp Cap (vph)		208			220			2237			3115	
v/s Ratio Prot												
v/s Ratio Perm		c0.12			0.09			c0.57			0.27	
v/c Ratio		0.77			0.57			0.77			0.36	
Uniform Delay, d1		32.3			31.2			6.2			3.6	
Progression Factor		1.00			1.00			1.00			1.00	
Incremental Delay, d2		14.8			2.0			2.6			0.3	
Delay (s)		47.1			33.2			8.8			3.9	
Level of Service		D			C			A			A	
Approach Delay (s)		47.1			33.2			8.8			3.9	
Approach LOS		D			C			A			A	

Intersection Summary			
HCM Average Control Delay	10.4	HCM Level of Service	B
HCM Volume to Capacity ratio	0.77		
Actuated Cycle Length (s)	80.0	Sum of lost time (s)	8.0
Intersection Capacity Utilization	104.7%	ICU Level of Service	G
Analysis Period (min)	15		
c Critical Lane Group			

Movement	EBL	EBT	EBR	WBL	WBT	WBR	NBL	NBT	NBR	SBL	SBT	SBR
Lane Configurations												
Ideal Flow (vphpl)	1900	1900	1900	1900	1900	1900	1900	1900	1900	1900	1900	1900
Total Lost time (s)	4.0	4.0		4.0	4.0		4.0	4.0		4.0	4.0	
Lane Util. Factor	1.00	0.95		1.00	0.95		1.00	1.00		1.00	1.00	
Frpb, ped/bikes	1.00	1.00		1.00	0.99		1.00	1.00		1.00	1.00	
Flpb, ped/bikes	1.00	1.00		1.00	1.00		0.98	1.00		1.00	1.00	
Frt	1.00	0.99		1.00	0.98		1.00	0.98		1.00	0.98	
Flt Protected	0.95	1.00		0.95	1.00		0.95	1.00		0.95	1.00	
Satd. Flow (prot)	1761	3486		1766	3439		1738	1818		1764	1817	
Flt Permitted	0.27	1.00		0.16	1.00		0.57	1.00		0.36	1.00	
Satd. Flow (perm)	504	3486		297	3439		1050	1818		669	1817	
Volume (vph)	40	835	80	56	582	105	130	391	65	105	200	30
Peak-hour factor, PHF	0.95	0.95	0.95	0.95	0.95	0.95	0.95	0.95	0.95	0.95	0.95	0.95
Adj. Flow (vph)	42	879	84	59	613	111	137	412	68	111	211	32
RTOR Reduction (vph)	0	9	0	0	19	0	0	8	0	0	7	0
Lane Group Flow (vph)	42	954	0	59	705	0	137	473	0	111	236	0
Confl. Peds. (#/hr)	12		12	12		12	42		12	12		42
Turn Type	Perm			Perm			Perm			Perm		
Protected Phases		4			8			2			6	
Permitted Phases	4			8			2			6		
Actuated Green, G (s)	33.0	33.0		33.0	33.0		40.5	40.5		40.5	40.5	
Effective Green, g (s)	32.0	32.0		32.0	32.0		40.0	40.0		40.0	40.0	
Actuated g/C Ratio	0.40	0.40		0.40	0.40		0.50	0.50		0.50	0.50	
Clearance Time (s)	3.0	3.0		3.0	3.0		3.5	3.5		3.5	3.5	
Lane Grp Cap (vph)	202	1394		119	1376		525	909		335	909	
v/s Ratio Prot		c0.27			0.21			c0.26			0.13	
v/s Ratio Perm	0.08			0.20			0.13			0.17		
v/c Ratio	0.21	0.68		0.50	0.51		0.26	0.52		0.33	0.26	
Uniform Delay, d1	15.7	19.8		18.0	18.1		11.5	13.5		12.0	11.5	
Progression Factor	1.00	1.00		1.77	1.91		1.72	1.78		1.00	1.00	
Incremental Delay, d2	2.3	2.7		11.5	1.1		0.4	0.7		2.6	0.7	
Delay (s)	18.0	22.6		43.2	35.7		20.2	24.7		14.6	12.2	
Level of Service	B	C		D	D		C	C		B	B	
Approach Delay (s)		22.4			36.3			23.7			12.9	
Approach LOS		C			D			C			B	

Intersection Summary			
HCM Average Control Delay	25.4	HCM Level of Service	C
HCM Volume to Capacity ratio	0.59		
Actuated Cycle Length (s)	80.0	Sum of lost time (s)	8.0
Intersection Capacity Utilization	82.2%	ICU Level of Service	E
Analysis Period (min)	15		
c Critical Lane Group			

Movement	EBL	EBT	EBR	WBL	WBT	WBR	NBL	NBT	NBR	SBL	SBT	SBR
Lane Configurations												
Ideal Flow (vphpl)	1900	1900	1900	1900	1900	1900	1900	1900	1900	1900	1900	1900
Total Lost time (s)	4.0	4.0		4.0	4.0			4.0			4.0	
Lane Util. Factor	1.00	0.95		1.00	0.95			0.95			0.95	
Frpb, ped/bikes	1.00	0.99		1.00	1.00			1.00			1.00	
Flpb, ped/bikes	0.99	1.00		0.99	1.00			1.00			1.00	
Frt	1.00	0.99		1.00	0.99			0.98			0.98	
Flt Protected	0.95	1.00		0.95	1.00			0.99			0.99	
Satd. Flow (prot)	1757	3471		1750	3485			3422			3424	
Flt Permitted	0.21	1.00		0.16	1.00			0.81			0.87	
Satd. Flow (perm)	386	3471		295	3485			2819			3003	
Volume (vph)	50	924	80	64	653	58	100	283	57	33	180	40
Peak-hour factor, PHF	0.97	0.97	0.97	0.97	0.97	0.97	0.97	0.97	0.97	0.97	0.97	0.97
Adj. Flow (vph)	52	953	82	66	673	60	103	292	59	34	186	41
RTOR Reduction (vph)	0	8	0	0	8	0	0	3	0	0	17	0
Lane Group Flow (vph)	52	1027	0	66	725	0	0	451	0	0	244	0
Confl. Peds. (#/hr)	24		78	78		24	8		6	6		8
Turn Type	Perm			Perm			Perm			Perm		
Protected Phases		4			8			2			6	
Permitted Phases	4			8			2			6		
Actuated Green, G (s)	24.0	24.0		24.0	24.0			46.0			46.0	
Effective Green, g (s)	25.0	25.0		25.0	25.0			47.0			47.0	
Actuated g/C Ratio	0.31	0.31		0.31	0.31			0.59			0.59	
Clearance Time (s)	5.0	5.0		5.0	5.0			5.0			5.0	
Lane Grp Cap (vph)	121	1085		92	1089			1656			1764	
v/s Ratio Prot		c0.30			0.21							
v/s Ratio Perm	0.13			0.22				c0.16			0.08	
v/c Ratio	0.43	0.95		0.72	0.67			0.27			0.14	
Uniform Delay, d1	21.8	26.8		24.4	23.9			8.1			7.4	
Progression Factor	0.49	0.51		0.88	0.86			1.01			1.00	
Incremental Delay, d2	8.5	14.4		33.1	2.7			0.3			0.2	
Delay (s)	19.2	28.1		54.5	23.3			8.5			7.6	
Level of Service	B	C		D	C			A			A	
Approach Delay (s)		27.6			25.9			8.5			7.6	
Approach LOS		C			C			A			A	

Intersection Summary			
HCM Average Control Delay	21.7	HCM Level of Service	C
HCM Volume to Capacity ratio	0.51		
Actuated Cycle Length (s)	80.0	Sum of lost time (s)	8.0
Intersection Capacity Utilization	72.1%	ICU Level of Service	C
Analysis Period (min)	15		
c Critical Lane Group			

Movement	EBL	EBT	EBR	WBL	WBT	WBR	NBL	NBT	NBR	SBL	SBT	SBR
Lane Configurations												
Ideal Flow (vphpl)	1900	1900	1900	1900	1900	1900	1900	1900	1900	1900	1900	1900
Total Lost time (s)	4.0	4.0		4.0	4.0			4.0			4.0	
Lane Util. Factor	1.00	0.95		1.00	0.95			0.95			0.95	
Frpb, ped/bikes	1.00	1.00		1.00	0.99			0.99			1.00	
Flpb, ped/bikes	1.00	1.00		0.99	1.00			1.00			1.00	
Frt	1.00	0.99		1.00	0.97			0.97			0.98	
Flt Protected	0.95	1.00		0.95	1.00			0.99			0.99	
Satd. Flow (prot)	1766	3482		1760	3420			3400			3433	
Flt Permitted	0.21	1.00		0.17	1.00			0.87			0.75	
Satd. Flow (perm)	398	3482		314	3420			2976			2589	
Volume (vph)	70	900	84	119	710	165	65	403	111	81	226	40
Peak-hour factor, PHF	0.99	0.99	0.99	0.99	0.99	0.99	0.99	0.99	0.99	0.99	0.99	0.99
Adj. Flow (vph)	71	909	85	120	717	167	66	407	112	82	228	40
RTOR Reduction (vph)	0	9	0	0	25	0	0	26	0	0	12	0
Lane Group Flow (vph)	71	985	0	120	859	0	0	559	0	0	338	0
Confl. Peds. (#/hr)	8		39	39		8			25	25		
Turn Type	Perm			Perm			Perm			Perm		
Protected Phases		4			8			2			6	
Permitted Phases	4			8			2			6		
Actuated Green, G (s)	35.5	35.5		35.5	35.5			38.0			38.0	
Effective Green, g (s)	35.0	35.0		35.0	35.0			37.0			37.0	
Actuated g/C Ratio	0.44	0.44		0.44	0.44			0.46			0.46	
Clearance Time (s)	3.5	3.5		3.5	3.5			3.0			3.0	
Lane Grp Cap (vph)	174	1523		137	1496			1376			1197	
v/s Ratio Prot		0.28			0.25							
v/s Ratio Perm	0.18			c0.38				c0.19			0.13	
v/c Ratio	0.41	0.65		0.88	0.57			0.41			0.28	
Uniform Delay, d1	15.4	17.7		20.5	16.9			14.2			13.3	
Progression Factor	0.97	1.03		1.00	1.00			1.36			1.00	
Incremental Delay, d2	3.3	1.0		49.3	1.6			0.8			0.6	
Delay (s)	18.2	19.2		69.8	18.5			20.1			13.9	
Level of Service	B	B		E	B			C			B	
Approach Delay (s)		19.2			24.6			20.1			13.9	
Approach LOS		B			C			C			B	

Intersection Summary			
HCM Average Control Delay	20.6	HCM Level of Service	C
HCM Volume to Capacity ratio	0.63		
Actuated Cycle Length (s)	80.0	Sum of lost time (s)	8.0
Intersection Capacity Utilization	88.1%	ICU Level of Service	E
Analysis Period (min)	15		
c Critical Lane Group			

Movement	EBT	EBR	WBL	WBT	NBL	NBR
Lane Configurations						
Ideal Flow (vphpl)	1900	1900	1900	1900	1900	1900
Total Lost time (s)	4.0		4.0	4.0	4.0	
Lane Util. Factor	0.95		1.00	0.95	1.00	
Frpb, ped/bikes	0.95		1.00	1.00	1.00	
Flpb, ped/bikes	1.00		1.00	1.00	1.00	
Frt	0.99		1.00	1.00	0.96	
Flt Protected	1.00		0.95	1.00	0.97	
Satd. Flow (prot)	3312		1770	3539	1730	
Flt Permitted	1.00		0.95	1.00	0.97	
Satd. Flow (perm)	3312		1770	3539	1730	
Volume (vph)	996	108	55	833	171	66
Peak-hour factor, PHF	0.97	0.97	0.97	0.97	0.97	0.97
Adj. Flow (vph)	1027	111	57	859	176	68
RTOR Reduction (vph)	0	0	0	0	0	0
Lane Group Flow (vph)	1138	0	57	859	244	0
Confl. Peds. (#/hr)		213	348			
Turn Type			Prot			
Protected Phases	4		3	8	2	
Permitted Phases						
Actuated Green, G (s)	30.2		4.8	39.0	13.0	
Effective Green, g (s)	30.2		4.8	39.0	13.0	
Actuated g/C Ratio	0.50		0.08	0.65	0.22	
Clearance Time (s)	4.0		4.0	4.0	4.0	
Vehicle Extension (s)	3.0		3.0	3.0	3.0	
Lane Grp Cap (vph)	1667		142	2300	375	
v/s Ratio Prot	c0.34		0.03	c0.24	c0.14	
v/s Ratio Perm						
v/c Ratio	0.68		0.40	0.37	0.65	
Uniform Delay, d1	11.3		26.2	4.9	21.4	
Progression Factor	1.00		1.00	1.00	1.00	
Incremental Delay, d2	2.3		1.9	0.5	4.0	
Delay (s)	13.6		28.1	5.3	25.4	
Level of Service	B		C	A	C	
Approach Delay (s)	13.6			6.7	25.4	
Approach LOS	B			A	C	

Intersection Summary			
HCM Average Control Delay	12.1	HCM Level of Service	B
HCM Volume to Capacity ratio	0.65		
Actuated Cycle Length (s)	60.0	Sum of lost time (s)	12.0
Intersection Capacity Utilization	58.6%	ICU Level of Service	B
Analysis Period (min)	15		
c Critical Lane Group			

Movement	EBL	EBT	EBR	WBL	WBT	WBR	NBL	NBT	NBR	SBL	SBT	SBR
Lane Configurations												
Ideal Flow (vphpl)	1900	1900	1900	1900	1900	1900	1900	1900	1900	1900	1900	1900
Total Lost time (s)	4.0	4.0		4.0	4.0		4.0	4.0		4.0	4.0	
Lane Util. Factor	1.00	0.95		1.00	0.95		1.00	0.95		1.00	0.95	
Frpb, ped/bikes	1.00	0.99		1.00	0.96		1.00	0.99		1.00	0.97	
Flpb, ped/bikes	0.94	1.00		0.98	1.00		1.00	1.00		1.00	1.00	
Frt	1.00	0.98		1.00	0.97		1.00	0.99		1.00	0.97	
Flt Protected	0.95	1.00		0.95	1.00		0.95	1.00		0.95	1.00	
Satd. Flow (prot)	1657	3420		1734	3316		1770	3475		1770	3343	
Flt Permitted	0.29	1.00		0.15	1.00		0.95	1.00		0.95	1.00	
Satd. Flow (perm)	506	3420		281	3316		1770	3475		1770	3343	
Volume (vph)	219	734	109	55	497	110	226	1280	104	110	659	165
Peak-hour factor, PHF	0.98	0.98	0.98	0.98	0.98	0.98	0.98	0.98	0.98	0.98	0.98	0.98
Adj. Flow (vph)	223	749	111	56	507	112	231	1306	106	112	672	168
RTOR Reduction (vph)	0	15	0	0	24	0	0	7	0	0	27	0
Lane Group Flow (vph)	223	845	0	56	595	0	231	1405	0	112	813	0
Confl. Peds. (#/hr)	94		86	86		94			40			111
Turn Type	Perm			Perm			Prot			Prot		
Protected Phases		4			8		5	2		1	6	
Permitted Phases	4			8								
Actuated Green, G (s)	25.5	25.5		25.5	25.5		12.6	32.8		8.2	28.4	
Effective Green, g (s)	26.0	26.0		26.0	26.0		13.1	33.3		8.7	28.9	
Actuated g/C Ratio	0.32	0.32		0.32	0.32		0.16	0.42		0.11	0.36	
Clearance Time (s)	4.5	4.5		4.5	4.5		4.5	4.5		4.5	4.5	
Vehicle Extension (s)	2.0	2.0		2.0	2.0		2.0	2.0		2.0	2.0	
Lane Grp Cap (vph)	164	1112		91	1078		290	1446		192	1208	
v/s Ratio Prot		0.25			0.18		c0.13	c0.40		0.06	0.24	
v/s Ratio Perm	c0.44			0.20								
v/c Ratio	1.36	0.76		0.62	0.55		0.80	0.97		0.58	0.67	
Uniform Delay, d1	27.0	24.2		22.8	22.2		32.2	22.9		33.9	21.6	
Progression Factor	1.00	1.00		1.00	1.00		1.04	1.12		1.00	1.00	
Incremental Delay, d2	196.1	2.8		8.4	0.3		10.4	15.1		2.9	3.0	
Delay (s)	223.1	27.0		31.2	22.6		44.0	40.7		36.8	24.6	
Level of Service	F	C		C	C		D	D		D	C	
Approach Delay (s)		67.4			23.3			41.1			26.0	
Approach LOS		E			C			D			C	

Intersection Summary			
HCM Average Control Delay	41.6	HCM Level of Service	D
HCM Volume to Capacity ratio	1.06		
Actuated Cycle Length (s)	80.0	Sum of lost time (s)	8.0
Intersection Capacity Utilization	88.8%	ICU Level of Service	E
Analysis Period (min)	15		

c Critical Lane Group

Movement	WBL	WBR	NBT	NBR	SBL	SBT
Lane Configurations						
Sign Control	Stop		Free			Free
Grade	0%		0%			0%
Volume (veh/h)	20	41	1559	30	20	853
Peak Hour Factor	0.95	0.95	0.95	0.95	0.95	0.95
Hourly flow rate (vph)	21	43	1641	32	21	898
Pedestrians	52		52			45
Lane Width (ft)	12.0		12.0			12.0
Walking Speed (ft/s)	4.0		4.0			4.0
Percent Blockage	4		4			4
Right turn flare (veh)						
Median type	None					
Median storage veh)						
Upstream signal (ft)			230			471
pX, platoon unblocked	0.81	0.76			0.76	
vC, conflicting volume	2252	933			1725	
vC1, stage 1 conf vol						
vC2, stage 2 conf vol						
vCu, unblocked vol	1911	593			1637	
tC, single (s)	6.8	6.9			4.1	
tC, 2 stage (s)						
tF (s)	3.5	3.3			2.2	
p0 queue free %	49	86			93	
cM capacity (veh/h)	41	313			284	

Direction, Lane #	WB 1	NB 1	NB 2	SB 1	SB 2	SB 3
Volume Total	64	1094	579	21	449	449
Volume Left	21	0	0	21	0	0
Volume Right	43	0	32	0	0	0
cSH	99	1700	1700	284	1700	1700
Volume to Capacity	0.65	0.64	0.34	0.07	0.26	0.26
Queue Length 95th (ft)	80	0	0	6	0	0
Control Delay (s)	92.1	0.0	0.0	18.7	0.0	0.0
Lane LOS	F			C		
Approach Delay (s)	92.1	0.0		0.4		
Approach LOS	F					

Intersection Summary			
Average Delay	2.4		
Intersection Capacity Utilization	62.5%	ICU Level of Service	B
Analysis Period (min)	15		

Movement	EBL	EBT	EBR	WBL	WBT	WBR	NBL	NBT	NBR	SBL	SBT	SBR
Lane Configurations												
Ideal Flow (vphpl)	1900	1900	1900	1900	1900	1900	1900	1900	1900	1900	1900	1900
Total Lost time (s)		4.0		4.0	4.0			4.0		4.0	4.0	
Lane Util. Factor		0.91		1.00	0.95			1.00		1.00	1.00	
Frpb, ped/bikes		1.00		1.00	0.99			1.00		1.00	0.99	
Flpb, ped/bikes		1.00		1.00	1.00			1.00		1.00	1.00	
Frt		0.99		1.00	0.97			0.98		1.00	0.98	
Flt Protected		0.99		0.95	1.00			0.99		0.95	1.00	
Satd. Flow (prot)		5018		1768	3397			1794		1764	1803	
Flt Permitted		0.74		0.30	1.00			0.69		0.26	1.00	
Satd. Flow (perm)		3716		556	3397			1254		480	1803	
Volume (vph)	110	698	30	93	667	201	80	375	90	70	276	50
Peak-hour factor, PHF	0.98	0.98	0.98	0.98	0.98	0.98	0.98	0.98	0.98	0.98	0.98	0.98
Adj. Flow (vph)	112	712	31	95	681	205	82	383	92	71	282	51
RTOR Reduction (vph)	0	5	0	0	35	0	0	9	0	0	8	0
Lane Group Flow (vph)	0	850	0	95	851	0	0	548	0	71	325	0
Confl. Peds. (#/hr)	24		4	4		24	48		12	12		48
Turn Type	Perm			Perm			Perm			Perm		
Protected Phases		4			8			2			6	
Permitted Phases	4			8			2			6		
Actuated Green, G (s)		46.0		46.0	46.0			24.0		24.0	24.0	
Effective Green, g (s)		47.0		47.0	47.0			25.0		25.0	25.0	
Actuated g/C Ratio		0.59		0.59	0.59			0.31		0.31	0.31	
Clearance Time (s)		5.0		5.0	5.0			5.0		5.0	5.0	
Lane Grp Cap (vph)		2183		327	1996			392		150	563	
v/s Ratio Prot					c0.25						0.18	
v/s Ratio Perm		0.23		0.17				c0.44		0.15		
v/c Ratio		0.39		0.29	0.43			1.40		0.47	0.58	
Uniform Delay, d1		8.8		8.2	9.1			27.5		22.2	23.1	
Progression Factor		1.00		1.69	1.77			1.00		0.79	0.79	
Incremental Delay, d2		0.5		2.1	0.6			194.0		9.9	4.1	
Delay (s)		9.4		16.0	16.7			221.5		27.4	22.2	
Level of Service		A		B	B			F		C	C	
Approach Delay (s)		9.4			16.6			221.5			23.1	
Approach LOS		A			B			F			C	

Intersection Summary			
HCM Average Control Delay	56.2	HCM Level of Service	E
HCM Volume to Capacity ratio	0.76		
Actuated Cycle Length (s)	80.0	Sum of lost time (s)	8.0
Intersection Capacity Utilization	139.8%	ICU Level of Service	H
Analysis Period (min)	15		
c Critical Lane Group			

Movement	EBL	EBT	EBR	WBL	WBT	WBR	NBL	NBT	NBR	SBL	SBT	SBR
Lane Configurations												
Ideal Flow (vphpl)	1900	1900	1900	1900	1900	1900	1900	1900	1900	1900	1900	1900
Total Lost time (s)		4.0			4.0		4.0	4.0		4.0	4.0	
Lane Util. Factor		0.91			0.91		1.00	1.00		1.00	1.00	
Frpb, ped/bikes		1.00			1.00		1.00	1.00		1.00	1.00	
Flpb, ped/bikes		1.00			1.00		1.00	1.00		1.00	1.00	
Frt		0.99			0.98		1.00	0.96		1.00	0.98	
Flt Protected		0.99			1.00		0.95	1.00		0.95	1.00	
Satd. Flow (prot)		5006			4947		1770	1787		1764	1831	
Flt Permitted		0.76			0.81		0.39	1.00		0.31	1.00	
Satd. Flow (perm)		3804			4016		729	1787		570	1831	
Volume (vph)	80	608	40	83	770	153	60	237	76	70	234	30
Peak-hour factor, PHF	0.95	0.95	0.95	0.95	0.95	0.95	0.95	0.95	0.95	0.95	0.95	0.95
Adj. Flow (vph)	84	640	42	87	811	161	63	249	80	74	246	32
RTOR Reduction (vph)	0	8	0	0	32	0	0	14	0	0	6	0
Lane Group Flow (vph)	0	758	0	0	1027	0	63	315	0	74	272	0
Confl. Peds. (#/hr)			12	12					6	6		
Turn Type	Perm			Perm			Perm			Perm		
Protected Phases		4			8			2			6	
Permitted Phases	4			8			2			6		
Actuated Green, G (s)		51.5			51.5		20.5	20.5		20.5	20.5	
Effective Green, g (s)		51.5			51.5		20.5	20.5		20.5	20.5	
Actuated g/C Ratio		0.64			0.64		0.26	0.26		0.26	0.26	
Clearance Time (s)		4.0			4.0		4.0	4.0		4.0	4.0	
Lane Grp Cap (vph)		2449			2585		187	458		146	469	
v/s Ratio Prot								c0.18			0.15	
v/s Ratio Perm		0.20			c0.26		0.09			0.13		
v/c Ratio		0.31			0.40		0.34	0.69		0.51	0.58	
Uniform Delay, d1		6.3			6.8		24.2	26.9		25.4	26.0	
Progression Factor		1.27			2.01		1.00	1.00		1.14	1.14	
Incremental Delay, d2		0.3			0.4		4.8	8.2		11.1	4.7	
Delay (s)		8.3			14.1		29.0	35.0		40.0	34.5	
Level of Service		A			B		C	D		D	C	
Approach Delay (s)		8.3			14.1			34.1			35.7	
Approach LOS		A			B			C			D	

Intersection Summary			
HCM Average Control Delay	18.4	HCM Level of Service	B
HCM Volume to Capacity ratio	0.48		
Actuated Cycle Length (s)	80.0	Sum of lost time (s)	8.0
Intersection Capacity Utilization	81.1%	ICU Level of Service	D
Analysis Period (min)	15		
c Critical Lane Group			

Movement	EBL	EBT	EBR	WBL	WBT	WBR	NBL	NBT	NBR	SBL	SBT	SBR
Lane Configurations												
Ideal Flow (vphpl)	1900	1900	1900	1900	1900	1900	1900	1900	1900	1900	1900	1900
Total Lost time (s)		4.0			4.0			4.0			4.0	
Lane Util. Factor		0.91			0.91			0.95			0.95	
Frpb, ped/bikes		1.00			1.00			1.00			1.00	
Flpb, ped/bikes		1.00			1.00			1.00			1.00	
Frt		0.99			0.97			0.97			0.97	
Flt Protected		1.00			1.00			0.99			0.99	
Satd. Flow (prot)		5017			4906			3405			3364	
Flt Permitted		0.78			0.83			0.79			0.65	
Satd. Flow (perm)		3937			4103			2693			2205	
Volume (vph)	63	671	40	71	855	221	60	296	75	130	217	82
Peak-hour factor, PHF	0.99	0.99	0.99	0.99	0.99	0.99	0.99	0.99	0.99	0.99	0.99	0.99
Adj. Flow (vph)	64	678	40	72	864	223	61	299	76	131	219	83
RTOR Reduction (vph)	0	7	0	0	50	0	0	22	0	0	26	0
Lane Group Flow (vph)	0	775	0	0	1109	0	0	414	0	0	407	0
Confl. Peds. (#/hr)	9		17	17		9	12		10	10		12
Turn Type	Perm			Perm			Perm			Perm		
Protected Phases		4			8			2			6	
Permitted Phases	4			8			2			6		
Actuated Green, G (s)		50.0			50.0			19.0			19.0	
Effective Green, g (s)		51.5			51.5			20.5			20.5	
Actuated g/C Ratio		0.64			0.64			0.26			0.26	
Clearance Time (s)		5.5			5.5			5.5			5.5	
Lane Grp Cap (vph)		2534			2641			690			565	
v/s Ratio Prot												
v/s Ratio Perm		0.20			c0.27			0.15			c0.18	
v/c Ratio		0.31			0.42			0.60			0.72	
Uniform Delay, d1		6.3			7.0			26.1			27.1	
Progression Factor		1.49			0.95			1.00			1.13	
Incremental Delay, d2		0.3			0.4			3.8			7.7	
Delay (s)		9.7			7.0			30.0			38.2	
Level of Service		A			A			C			D	
Approach Delay (s)		9.7			7.0			30.0			38.2	
Approach LOS		A			A			C			D	

Intersection Summary			
HCM Average Control Delay	16.1	HCM Level of Service	B
HCM Volume to Capacity ratio	0.51		
Actuated Cycle Length (s)	80.0	Sum of lost time (s)	8.0
Intersection Capacity Utilization	114.4%	ICU Level of Service	H
Analysis Period (min)	15		
c Critical Lane Group			

Movement	EBL	EBT	EBR	WBL	WBT	WBR	NBL	NBT	NBR	SBL	SBT	SBR
Lane Configurations												
Ideal Flow (vphpl)	1900	1900	1900	1900	1900	1900	1900	1900	1900	1900	1900	1900
Total Lost time (s)		4.0			4.0			4.0			4.0	
Lane Util. Factor		0.91			0.91			1.00			1.00	
Frpb, ped/bikes		1.00			0.99			1.00			0.96	
Flpb, ped/bikes		1.00			1.00			1.00			1.00	
Frt		1.00			0.99			0.93			0.92	
Flt Protected		1.00			1.00			0.98			0.98	
Satd. Flow (prot)		5052			4975			1695			1608	
Flt Permitted		0.75			0.93			0.86			0.85	
Satd. Flow (perm)		3825			4623			1493			1401	
Volume (vph)	90	815	10	10	945	60	10	0	10	138	0	189
Peak-hour factor, PHF	0.96	0.96	0.95	0.95	0.96	0.96	0.95	0.95	0.95	0.96	0.95	0.96
Adj. Flow (vph)	94	849	11	11	984	62	11	0	11	144	0	197
RTOR Reduction (vph)	0	1	0	0	0	0	0	8	0	0	0	0
Lane Group Flow (vph)	0	953	0	0	1057	0	0	14	0	0	341	0
Confl. Peds. (#/hr)						79						79
Turn Type	Perm			Perm			Perm			Perm		
Protected Phases		4			8			2			6	
Permitted Phases	4			8			2			6		
Actuated Green, G (s)		49.3			49.3			22.7			22.7	
Effective Green, g (s)		49.3			49.3			22.7			22.7	
Actuated g/C Ratio		0.62			0.62			0.28			0.28	
Clearance Time (s)		4.0			4.0			4.0			4.0	
Vehicle Extension (s)		3.0			3.0			3.0			3.0	
Lane Grp Cap (vph)		2357			2849			424			398	
v/s Ratio Prot												
v/s Ratio Perm		c0.25			0.23			0.01			c0.24	
v/c Ratio		0.40			0.37			0.03			0.86	
Uniform Delay, d1		7.8			7.6			20.7			27.1	
Progression Factor		0.79			1.00			1.00			1.00	
Incremental Delay, d2		0.5			0.4			0.0			16.4	
Delay (s)		6.7			8.0			20.7			43.5	
Level of Service		A			A			C			D	
Approach Delay (s)		6.7			8.0			20.7			43.5	
Approach LOS		A			A			C			D	

Intersection Summary			
HCM Average Control Delay	12.7	HCM Level of Service	B
HCM Volume to Capacity ratio	0.55		
Actuated Cycle Length (s)	80.0	Sum of lost time (s)	8.0
Intersection Capacity Utilization	73.7%	ICU Level of Service	D
Analysis Period (min)	15		
c Critical Lane Group			

Movement	EBL	EBT	EBR	WBL	WBT	WBR	NBL	NBT	NBR	SBL	SBT	SBR
Lane Configurations												
Ideal Flow (vphpl)	1900	1900	1900	1900	1900	1900	1900	1900	1900	1900	1900	1900
Total Lost time (s)		4.0			4.0		4.0	4.0		4.0	4.0	
Lane Util. Factor		0.91			0.91		1.00	0.95		1.00	0.95	
Frpb, ped/bikes		1.00			0.99		1.00	0.99		1.00	0.99	
Flpb, ped/bikes		1.00			1.00		0.99	1.00		0.99	1.00	
Frt		0.99			0.95		1.00	0.98		1.00	0.98	
Flt Protected		0.99			1.00		0.95	1.00		0.95	1.00	
Satd. Flow (prot)		4925			4756		1748	3451		1745	3455	
Flt Permitted		0.67			0.76		0.29	1.00		0.14	1.00	
Satd. Flow (perm)		3351			3625		534	3451		262	3455	
Volume (vph)	267	605	91	90	784	426	110	896	100	206	596	81
Peak-hour factor, PHF	0.95	0.95	0.95	0.95	0.95	0.95	0.95	0.95	0.95	0.95	0.95	0.95
Adj. Flow (vph)	281	637	96	95	825	448	116	943	105	217	627	85
RTOR Reduction (vph)	0	9	0	0	6	0	0	7	0	0	9	0
Lane Group Flow (vph)	0	1005	0	0	1362	0	116	1041	0	217	703	0
Confl. Peds. (#/hr)	26		19			26	39		92	92		39
Turn Type	Perm			pm+pt			Perm			Perm		
Protected Phases		4		3	8			2			6	
Permitted Phases	4			8			2			6		
Actuated Green, G (s)		37.8			37.8		34.4	34.4		34.4	34.4	
Effective Green, g (s)		39.3			39.3		35.4	35.4		35.4	35.4	
Actuated g/C Ratio		0.48			0.48		0.43	0.43		0.43	0.43	
Clearance Time (s)		5.5			5.5		5.0	5.0		5.0	5.0	
Vehicle Extension (s)		2.0			2.0		2.0	2.0		2.0	2.0	
Lane Grp Cap (vph)		1592			1723		229	1477		112	1479	
v/s Ratio Prot								0.30			0.20	
v/s Ratio Perm		0.30			c0.38		0.22			c0.83		
v/c Ratio		1.62dl			0.79		0.51	0.70		1.94	0.48	
Uniform Delay, d1		16.3			18.2		17.3	19.4		23.7	17.0	
Progression Factor		1.00			1.00		1.00	1.00		1.00	1.00	
Incremental Delay, d2		0.6			2.4		7.8	2.8		452.8	1.1	
Delay (s)		16.9			20.6		25.1	22.2		476.5	18.1	
Level of Service		B			C		C	C		F	B	
Approach Delay (s)		16.9			20.6			22.5			125.2	
Approach LOS		B			C			C			F	

Intersection Summary			
HCM Average Control Delay	42.0	HCM Level of Service	D
HCM Volume to Capacity ratio	1.33		
Actuated Cycle Length (s)	82.7	Sum of lost time (s)	8.0
Intersection Capacity Utilization	99.9%	ICU Level of Service	F
Analysis Period (min)	15		

dl Defacto Left Lane. Recode with 1 though lane as a left lane.
c Critical Lane Group

Movement	EBL	EBT	EBR	WBL	WBT	WBR	NBL	NBT	NBR	SBL	SBT	SBR
Lane Configurations												
Ideal Flow (vphpl)	1900	1900	1900	1900	1900	1900	1900	1900	1900	1900	1900	1900
Total Lost time (s)		4.0			4.0			4.0	4.0		4.0	
Lane Util. Factor		0.91			0.91			1.00	1.00		1.00	
Frpb, ped/bikes		1.00			1.00			1.00	0.89		0.94	
Flpb, ped/bikes		1.00			1.00			0.96	1.00		0.98	
Frt		0.99			1.00			1.00	0.85		0.92	
Flt Protected		1.00			1.00			0.98	1.00		0.99	
Satd. Flow (prot)		5020			5019			1748	1406		1566	
Flt Permitted		0.84			0.78			0.81	1.00		0.92	
Satd. Flow (perm)		4230			3930			1457	1406		1455	
Volume (vph)	40	862	39	100	1167	40	93	94	200	30	30	80
Peak-hour factor, PHF	0.99	0.99	0.99	0.99	0.99	0.99	0.99	0.99	0.99	0.99	0.99	0.99
Adj. Flow (vph)	40	871	39	101	1179	40	94	95	202	30	30	81
RTOR Reduction (vph)	0	6	0	0	4	0	0	0	75	0	37	0
Lane Group Flow (vph)	0	944	0	0	1316	0	0	189	127	0	104	0
Confl. Peds. (#/hr)	100		100	100		100	100		100	100		100
Turn Type	Perm			Perm			Perm		Perm	Perm		
Protected Phases		4			8			2			6	
Permitted Phases	4			8			2		2	6		
Actuated Green, G (s)		49.5			49.5			24.5	24.5		24.5	
Effective Green, g (s)		48.5			48.5			23.5	23.5		23.5	
Actuated g/C Ratio		0.61			0.61			0.29	0.29		0.29	
Clearance Time (s)		3.0			3.0			3.0	3.0		3.0	
Lane Grp Cap (vph)		2564			2383			428	413		427	
v/s Ratio Prot												
v/s Ratio Perm		0.22			c0.33			c0.13	0.09		0.07	
v/c Ratio		0.37			0.55			0.44	0.31		0.24	
Uniform Delay, d1		8.0			9.3			22.9	21.9		21.5	
Progression Factor		1.00			1.00			1.00	1.00		1.00	
Incremental Delay, d2		0.4			0.9			3.3	1.9		1.4	
Delay (s)		8.4			10.3			26.2	23.9		22.9	
Level of Service		A			B			C	C		C	
Approach Delay (s)		8.4			10.3			25.0			22.9	
Approach LOS		A			B			C			C	

Intersection Summary			
HCM Average Control Delay	12.3	HCM Level of Service	B
HCM Volume to Capacity ratio	0.52		
Actuated Cycle Length (s)	80.0	Sum of lost time (s)	8.0
Intersection Capacity Utilization	108.2%	ICU Level of Service	G
Analysis Period (min)	15		

c Critical Lane Group

Movement	EBL	EBT	EBR	WBL	WBT	WBR	NBL	NBT	NBR	SBL	SBT	SBR
Lane Configurations												
Ideal Flow (vphpl)	1900	1900	1900	1900	1900	1900	1900	1900	1900	1900	1900	1900
Total Lost time (s)	4.0	4.0		4.0	4.0		4.0	4.0	4.0	4.0	4.0	4.0
Lane Util. Factor	1.00	0.91		1.00	0.91		1.00	0.95	1.00	1.00	0.95	1.00
Frpb, ped/bikes	1.00	0.98		1.00	0.99		1.00	1.00	0.94	1.00	1.00	0.95
Flpb, ped/bikes	1.00	1.00		1.00	1.00		1.00	1.00	1.00	1.00	1.00	1.00
Frt	1.00	0.98		1.00	0.97		1.00	1.00	0.85	1.00	1.00	0.85
Flt Protected	0.95	1.00		0.95	1.00		0.95	1.00	1.00	0.95	1.00	1.00
Satd. Flow (prot)	1770	4917		1770	4885		1770	3539	1488	1770	3539	1497
Flt Permitted	0.95	1.00		0.95	1.00		0.95	1.00	1.00	0.95	1.00	1.00
Satd. Flow (perm)	1770	4917		1770	4885		1770	3539	1488	1770	3539	1497
Volume (vph)	200	759	103	110	937	240	230	851	180	380	423	110
Peak-hour factor, PHF	0.95	0.95	0.95	0.95	0.95	0.95	0.95	0.95	0.95	0.95	0.95	0.95
Adj. Flow (vph)	211	799	108	116	986	253	242	896	189	400	445	116
RTOR Reduction (vph)	0	14	0	0	38	0	0	0	24	0	0	69
Lane Group Flow (vph)	211	893	0	116	1201	0	242	896	165	400	445	47
Confl. Peds. (#/hr)			81			22			50			43
Turn Type	Prot			Prot			Prot		pm+ov	Prot		pm+ov
Protected Phases	7	4		3	8		5	2	3	1	6	7
Permitted Phases									2			6
Actuated Green, G (s)	12.0	34.0		12.0	34.0		21.0	33.0	45.0	25.0	37.0	49.0
Effective Green, g (s)	11.0	35.0		11.0	35.0		20.0	34.0	45.0	24.0	38.0	49.0
Actuated g/C Ratio	0.09	0.29		0.09	0.29		0.17	0.28	0.38	0.20	0.32	0.41
Clearance Time (s)	3.0	5.0		3.0	5.0		3.0	5.0	3.0	3.0	5.0	3.0
Vehicle Extension (s)	3.0	3.0		3.0	3.0		3.0	3.0	3.0	3.0	3.0	3.0
Lane Grp Cap (vph)	162	1434		162	1425		295	1003	608	354	1121	661
v/s Ratio Prot	c0.12	0.18		0.07	c0.25		0.14	c0.25	0.02	c0.23	c0.13	0.01
v/s Ratio Perm									0.09			0.03
v/c Ratio	1.30	0.62		0.72	0.84		0.82	0.89	0.27	1.13	0.40	0.07
Uniform Delay, d1	54.5	36.8		53.0	39.9		48.3	41.3	26.1	48.0	32.0	21.6
Progression Factor	1.00	1.00		1.00	1.00		1.00	1.00	1.00	1.00	1.00	1.00
Incremental Delay, d2	173.6	2.0		14.0	6.2		16.5	12.0	0.2	87.9	1.1	0.0
Delay (s)	228.1	38.8		67.0	46.2		64.7	53.3	26.3	135.9	33.1	21.7
Level of Service	F	D		E	D		E	D	C	F	C	C
Approach Delay (s)		74.6			47.9			51.5			74.5	
Approach LOS		E			D			D			E	

Intersection Summary			
HCM Average Control Delay	60.6	HCM Level of Service	E
HCM Volume to Capacity ratio	0.99		
Actuated Cycle Length (s)	120.0	Sum of lost time (s)	20.0
Intersection Capacity Utilization	92.9%	ICU Level of Service	F
Analysis Period (min)	15		

c Critical Lane Group

Movement	EBL	EBT	EBR	WBL	WBT	WBR	NBL	NBT	NBR	SBL	SBT	SBR
Lane Configurations												
Ideal Flow (vphpl)	1900	1900	1900	1900	1900	1900	1900	1900	1900	1900	1900	1900
Total Lost time (s)		4.0			4.0		4.0	4.0		4.0	4.0	
Lane Util. Factor		1.00			1.00		1.00	0.95		1.00	0.95	
Frpb, ped/bikes		0.94			0.96		1.00	0.99		1.00	0.99	
Flpb, ped/bikes		0.97			0.97		0.96	1.00		0.95	1.00	
Frt		0.96			0.96		1.00	0.99		1.00	0.99	
Flt Protected		0.98			0.98		0.95	1.00		0.95	1.00	
Satd. Flow (prot)		1598			1641		1700	3460		1679	3451	
Flt Permitted		0.67			0.82		0.28	1.00		0.34	1.00	
Satd. Flow (perm)		1095			1365		496	3460		597	3451	
Volume (vph)	112	50	70	60	70	64	140	681	50	46	813	67
Peak-hour factor, PHF	0.95	0.95	0.95	0.95	0.95	0.95	0.95	0.95	0.95	0.95	0.95	0.95
Adj. Flow (vph)	118	53	74	63	74	67	147	717	53	48	856	71
RTOR Reduction (vph)	0	23	0	0	26	0	0	5	0	0	6	0
Lane Group Flow (vph)	0	222	0	0	178	0	147	765	0	48	921	0
Confl. Peds. (#/hr)	100		100	100		100	100		100	100		100
Turn Type	Perm			Perm			Perm			Perm		
Protected Phases		4			4			2			6	
Permitted Phases	4			4			2			6		
Actuated Green, G (s)		17.9			17.9		55.1	55.1		55.1	55.1	
Effective Green, g (s)		17.4			17.4		54.6	54.6		54.6	54.6	
Actuated g/C Ratio		0.22			0.22		0.68	0.68		0.68	0.68	
Clearance Time (s)		3.5			3.5		3.5	3.5		3.5	3.5	
Vehicle Extension (s)		2.0			2.0		2.0	2.0		2.0	2.0	
Lane Grp Cap (vph)		238			297		339	2361		407	2355	
v/s Ratio Prot								0.22			0.27	
v/s Ratio Perm		c0.20			0.13		c0.30			0.08		
v/c Ratio		0.93			0.60		0.43	0.32		0.12	0.39	
Uniform Delay, d1		30.7			28.2		5.7	5.2		4.4	5.5	
Progression Factor		1.00			1.00		1.00	1.00		1.00	1.00	
Incremental Delay, d2		39.9			2.2		4.0	0.4		0.6	0.5	
Delay (s)		70.7			30.3		9.7	5.5		5.0	6.0	
Level of Service		E			C		A	A		A	A	
Approach Delay (s)		70.7			30.3			6.2			5.9	
Approach LOS		E			C			A			A	

Intersection Summary			
HCM Average Control Delay	14.9	HCM Level of Service	B
HCM Volume to Capacity ratio	0.55		
Actuated Cycle Length (s)	80.0	Sum of lost time (s)	8.0
Intersection Capacity Utilization	65.8%	ICU Level of Service	C
Analysis Period (min)	15		

c Critical Lane Group

Movement	EBL	EBT	EBR	WBL	WBT	WBR	NBL	NBT	NBR	SBL	SBT	SBR
Lane Configurations												
Ideal Flow (vphpl)	1900	1900	1900	1900	1900	1900	1900	1900	1900	1900	1900	1900
Total Lost time (s)	4.0	4.0		4.0	4.0		4.0	4.0		4.0	4.0	
Lane Util. Factor	1.00	0.95		1.00	0.95		1.00	0.95		1.00	0.95	
Frpb, ped/bikes	1.00	0.97		1.00	0.94		1.00	0.99		1.00	0.94	
Flpb, ped/bikes	1.00	1.00		1.00	1.00		0.96	1.00		0.97	1.00	
Frt	1.00	0.97		1.00	0.95		1.00	0.99		1.00	0.95	
Flt Protected	0.95	1.00		0.95	1.00		0.95	1.00		0.95	1.00	
Satd. Flow (prot)	1770	3340		1770	3162		1698	3476		1716	3134	
Flt Permitted	0.95	1.00		0.95	1.00		0.26	1.00		0.32	1.00	
Satd. Flow (perm)	1770	3340		1770	3162		471	3476		573	3134	
Volume (vph)	140	420	110	70	440	193	170	658	50	128	525	300
Peak-hour factor, PHF	0.98	0.98	0.98	0.98	0.98	0.98	0.98	0.98	0.98	0.98	0.98	0.98
Adj. Flow (vph)	143	429	112	71	449	197	173	671	51	131	536	306
RTOR Reduction (vph)	0	27	0	0	61	0	0	6	0	0	87	0
Lane Group Flow (vph)	143	514	0	71	585	0	173	716	0	131	755	0
Confl. Peds. (#/hr)			100			100	100		100	100		100
Turn Type	Prot			Prot			Perm			Perm		
Protected Phases	7	4		3	8			2			6	
Permitted Phases							2			6		
Actuated Green, G (s)	9.5	22.4		6.7	19.6		42.4	42.4		42.4	42.4	
Effective Green, g (s)	10.0	21.9		7.2	19.1		43.9	43.9		43.9	43.9	
Actuated g/C Ratio	0.12	0.26		0.08	0.22		0.52	0.52		0.52	0.52	
Clearance Time (s)	4.5	3.5		4.5	3.5		5.5	5.5		5.5	5.5	
Vehicle Extension (s)	2.0	2.0		2.0	2.0		2.0	2.0		2.0	2.0	
Lane Grp Cap (vph)	208	861		150	711		243	1795		296	1619	
v/s Ratio Prot	c0.08	c0.15		0.04	c0.18			0.21			0.24	
v/s Ratio Perm							c0.37			0.23		
v/c Ratio	0.69	0.60		0.47	0.82		0.71	0.40		0.44	0.47	
Uniform Delay, d1	36.0	27.7		37.1	31.3		15.7	12.5		12.9	13.1	
Progression Factor	1.00	1.00		1.00	1.00		1.00	1.00		1.00	1.00	
Incremental Delay, d2	7.3	0.7		0.9	7.3		16.3	0.7		4.7	1.0	
Delay (s)	43.3	28.4		38.0	38.6		32.0	13.2		17.6	14.1	
Level of Service	D	C		D	D		C	B		B	B	
Approach Delay (s)		31.5			38.5			16.8			14.5	
Approach LOS		C			D			B			B	

Intersection Summary			
HCM Average Control Delay	24.0	HCM Level of Service	C
HCM Volume to Capacity ratio	0.77		
Actuated Cycle Length (s)	85.0	Sum of lost time (s)	16.0
Intersection Capacity Utilization	77.0%	ICU Level of Service	D
Analysis Period (min)	15		

c Critical Lane Group

Movement	EBL	EBR	NBL	NBT	SBT	SBR
Lane Configurations						
Ideal Flow (vphpl)	1900	1900	1900	1900	1900	1900
Total Lost time (s)	4.0		4.0	4.0	4.0	
Lane Util. Factor	1.00		1.00	0.95	0.95	
Frt	0.91		1.00	1.00	0.98	
Flt Protected	0.99		0.95	1.00	1.00	
Satd. Flow (prot)	1662		1770	3539	3461	
Flt Permitted	0.99		0.95	1.00	1.00	
Satd. Flow (perm)	1662		1770	3539	3461	
Volume (vph)	65	150	85	1515	702	121
Peak-hour factor, PHF	0.95	0.95	0.95	0.95	0.95	0.95
Adj. Flow (vph)	68	158	89	1595	739	127
RTOR Reduction (vph)	127	0	0	0	12	0
Lane Group Flow (vph)	99	0	89	1595	854	0
Turn Type			Prot			
Protected Phases	2		3	8	4	
Permitted Phases						
Actuated Green, G (s)	15.5		7.3	56.5	45.2	
Effective Green, g (s)	15.5		7.3	56.5	45.2	
Actuated g/C Ratio	0.19		0.09	0.71	0.57	
Clearance Time (s)	4.0		4.0	4.0	4.0	
Vehicle Extension (s)	3.0		3.0	3.0	3.0	
Lane Grp Cap (vph)	322		162	2499	1955	
v/s Ratio Prot	c0.06		0.05	c0.45	0.25	
v/s Ratio Perm						
v/c Ratio	0.31		0.55	0.64	0.44	
Uniform Delay, d1	27.6		34.8	6.3	10.0	
Progression Factor	1.00		1.00	1.00	0.65	
Incremental Delay, d2	0.5		3.8	1.3	0.5	
Delay (s)	28.2		38.6	7.5	7.1	
Level of Service	C		D	A	A	
Approach Delay (s)	28.2			9.2	7.1	
Approach LOS	C			A	A	

Intersection Summary			
HCM Average Control Delay	10.1	HCM Level of Service	B
HCM Volume to Capacity ratio	0.57		
Actuated Cycle Length (s)	80.0	Sum of lost time (s)	8.0
Intersection Capacity Utilization	61.4%	ICU Level of Service	B
Analysis Period (min)	15		

c Critical Lane Group

Movement	EBL	EBT	EBR	WBL	WBT	WBR	NBL	NBT	NBR	SBL	SBT	SBR
Lane Configurations												
Ideal Flow (vphpl)	1900	1900	1900	1900	1900	1900	1900	1900	1900	1900	1900	1900
Total Lost time (s)	4.0	4.0		4.0	4.0		4.0	4.0		4.0	4.0	
Lane Util. Factor	0.97	0.95		1.00	0.95		1.00	0.95		1.00	0.95	
Frpb, ped/bikes	1.00	0.99		1.00	0.99		1.00	0.97		1.00	0.98	
Flpb, ped/bikes	1.00	1.00		1.00	1.00		1.00	1.00		1.00	1.00	
Frt	1.00	0.99		1.00	0.95		1.00	0.97		1.00	0.99	
Flt Protected	0.95	1.00		0.95	1.00		0.95	1.00		0.95	1.00	
Satd. Flow (prot)	3433	3456		1770	3308		1770	3325		1770	3413	
Flt Permitted	0.95	1.00		0.95	1.00		0.95	1.00		0.95	1.00	
Satd. Flow (perm)	3433	3456		1770	3308		1770	3325		1770	3413	
Volume (vph)	460	880	82	120	510	290	90	911	260	220	682	60
Peak-hour factor, PHF	0.95	0.95	0.95	0.95	0.95	0.95	0.95	0.95	0.95	0.95	0.95	0.95
Adj. Flow (vph)	484	926	86	126	537	305	95	959	274	232	718	63
RTOR Reduction (vph)	0	7	0	0	79	0	0	26	0	0	6	0
Lane Group Flow (vph)	484	1005	0	126	763	0	95	1207	0	232	775	0
Confl. Peds. (#/hr)	15		48	48		15	123		48	48		123
Turn Type	Prot			Prot			Prot			Prot		
Protected Phases	7	4		3	8		5	2		1	6	
Permitted Phases												
Actuated Green, G (s)	15.4	28.0		9.4	22.0		5.0	33.6		12.0	40.6	
Effective Green, g (s)	14.9	29.0		8.9	23.0		4.5	34.6		11.5	41.6	
Actuated g/C Ratio	0.15	0.29		0.09	0.23		0.04	0.35		0.12	0.42	
Clearance Time (s)	3.5	5.0		3.5	5.0		3.5	5.0		3.5	5.0	
Vehicle Extension (s)	2.0	2.0		2.0	2.0		2.0	2.0		2.0	2.0	
Lane Grp Cap (vph)	512	1002		158	761		80	1150		204	1420	
v/s Ratio Prot	c0.14	c0.29		0.07	0.23		0.05	c0.36		c0.13	0.23	
v/s Ratio Perm												
v/c Ratio	0.95	1.00		0.80	1.00		1.19	1.05		1.14	0.55	
Uniform Delay, d1	42.1	35.5		44.7	38.5		47.8	32.7		44.2	22.1	
Progression Factor	1.00	1.00		1.00	1.00		1.00	1.00		1.21	0.74	
Incremental Delay, d2	26.2	29.1		22.3	33.2		159.7	40.5		98.6	1.2	
Delay (s)	68.4	64.6		67.0	71.7		207.4	73.2		152.2	17.6	
Level of Service	E	E		E	E		F	E		F	B	
Approach Delay (s)		65.8			71.1			82.8			48.5	
Approach LOS		E			E			F			D	

Intersection Summary			
HCM Average Control Delay	67.9	HCM Level of Service	E
HCM Volume to Capacity ratio	1.01		
Actuated Cycle Length (s)	100.0	Sum of lost time (s)	12.0
Intersection Capacity Utilization	96.9%	ICU Level of Service	F
Analysis Period (min)	15		

c Critical Lane Group

Movement	EBL	EBT	EBR	WBL	WBT	WBR	NBL	NBT	NBR	SBL	SBT	SBR
Lane Configurations												
Ideal Flow (vphpl)	1900	1900	1900	1900	1900	1900	1900	1900	1900	1900	1900	1900
Total Lost time (s)		4.0		4.0	4.0			4.0		4.0	4.0	
Lane Util. Factor		0.91		1.00	0.95			1.00		1.00	1.00	
Frpb, ped/bikes		1.00		1.00	0.99			1.00		1.00	0.99	
Flpb, ped/bikes		1.00		1.00	1.00			1.00		1.00	1.00	
Frt		0.99		1.00	0.97			0.98		1.00	0.98	
Flt Protected		0.99		0.95	1.00			0.99		0.95	1.00	
Satd. Flow (prot)		5018		1768	3396			1793		1763	1802	
Flt Permitted		0.71		0.28	1.00			0.80		0.32	1.00	
Satd. Flow (perm)		3603		529	3396			1449		599	1802	
Volume (vph)	110	698	30	93	667	201	80	375	90	70	276	50
Peak-hour factor, PHF	0.98	0.98	0.98	0.98	0.98	0.98	0.98	0.98	0.98	0.98	0.98	0.98
Adj. Flow (vph)	112	712	31	95	681	205	82	383	92	71	282	51
RTOR Reduction (vph)	0	4	0	0	32	0	0	8	0	0	7	0
Lane Group Flow (vph)	0	851	0	95	854	0	0	549	0	71	326	0
Confl. Peds. (#/hr)	24		4	4		24	48		12	12		48
Turn Type	Perm			Perm			Perm			Perm		
Protected Phases		4			8			2			6	
Permitted Phases	4			8			2			6		
Actuated Green, G (s)		46.0		46.0	46.0			34.0		34.0	34.0	
Effective Green, g (s)		47.0		47.0	47.0			35.0		35.0	35.0	
Actuated g/C Ratio		0.52		0.52	0.52			0.39		0.39	0.39	
Clearance Time (s)		5.0		5.0	5.0			5.0		5.0	5.0	
Lane Grp Cap (vph)		1882		276	1773			564		233	701	
v/s Ratio Prot					c0.25						0.18	
v/s Ratio Perm		0.24		0.18				c0.38		0.12		
v/c Ratio		0.45		0.34	0.48			0.97		0.30	0.46	
Uniform Delay, d1		13.4		12.5	13.7			27.0		19.1	20.5	
Progression Factor		1.00		1.00	1.00			1.00		1.00	1.00	
Incremental Delay, d2		0.8		3.4	0.9			31.9		3.3	2.2	
Delay (s)		14.2		15.9	14.7			58.9		22.4	22.7	
Level of Service		B		B	B			E		C	C	
Approach Delay (s)		14.2			14.8			58.9			22.7	
Approach LOS		B			B			E			C	

Intersection Summary			
HCM Average Control Delay	24.5	HCM Level of Service	C
HCM Volume to Capacity ratio	0.69		
Actuated Cycle Length (s)	90.0	Sum of lost time (s)	8.0
Intersection Capacity Utilization	139.8%	ICU Level of Service	H
Analysis Period (min)	15		

c Critical Lane Group

APPENDIX N:
YEAR 2030 PLUS COMMERCIAL ALTERNATIVE
INTERSECTION LEVEL OF SERVICE CALCULATION WORKSHEETS

Movement	EBL	EBT	EBR	WBL	WBT	WBR	NBL	NBT	NBR	SBL	SBT	SBR
Lane Configurations												
Ideal Flow (vphpl)	1900	1900	1900	1900	1900	1900	1900	1900	1900	1900	1900	1900
Lane Width	12	12	12	12	12	12	16	16	16	16	16	16
Total Lost time (s)	4.0	4.0		4.0	4.0		2.0	2.0		2.0	2.0	
Lane Util. Factor	1.00	0.91		1.00	0.91		1.00	1.00		1.00	1.00	
Frpb, ped/bikes	1.00	0.99		1.00	0.99		1.00	0.99		1.00	0.98	
Flpb, ped/bikes	1.00	1.00		1.00	1.00		1.00	1.00		0.99	1.00	
Frt	1.00	0.97		1.00	0.98		1.00	0.97		1.00	0.94	
Flt Protected	0.95	1.00		0.95	1.00		0.95	1.00		0.95	1.00	
Satd. Flow (prot)	1770	4896		1770	4953		2006	2035		1986	1953	
Flt Permitted	0.95	1.00		0.95	1.00		0.10	1.00		0.42	1.00	
Satd. Flow (perm)	1770	4896		1770	4953		201	2035		876	1953	
Volume (vph)	310	1003	232	120	1660	250	200	298	70	180	432	290
Peak-hour factor, PHF	0.95	0.95	0.95	0.95	0.95	0.95	0.95	0.95	0.95	0.95	0.95	0.95
Adj. Flow (vph)	326	1056	244	126	1747	263	211	314	74	189	455	305
RTOR Reduction (vph)	0	30	0	0	16	0	0	7	0	0	20	0
Lane Group Flow (vph)	326	1270	0	126	1994	0	211	381	0	189	740	0
Confl. Peds. (#/hr)			10	10		10	10		10	10		10
Turn Type	Prot			Prot			pm+pt			Perm		
Protected Phases	7	4		3	8		5	2			6	
Permitted Phases							2			6		
Actuated Green, G (s)	17.0	47.9		13.1	44.0		48.5	48.5		39.5	39.5	
Effective Green, g (s)	17.0	47.9		13.1	44.0		49.0	49.0		40.0	40.0	
Actuated g/C Ratio	0.14	0.40		0.11	0.37		0.41	0.41		0.33	0.33	
Clearance Time (s)	4.0	4.0		4.0	4.0		4.0	2.5		2.5	2.5	
Vehicle Extension (s)	3.0	3.0		3.0	3.0		3.0	3.0		3.0	3.0	
Lane Grp Cap (vph)	251	1954		193	1816		187	831		292	651	
v/s Ratio Prot	c0.18	c0.26		0.07	c0.40		c0.07	0.19			c0.38	
v/s Ratio Perm							0.39			0.22		
v/c Ratio	1.30	0.65		0.65	1.10		1.13	0.46		0.65	1.14	
Uniform Delay, d1	51.5	29.2		51.3	38.0		58.7	25.8		34.0	40.0	
Progression Factor	1.00	1.00		0.89	1.32		1.00	1.00		1.00	1.00	
Incremental Delay, d2	160.6	1.7		0.7	45.0		104.5	0.4		4.9	79.3	
Delay (s)	212.1	30.9		46.5	95.0		163.2	26.2		38.9	119.3	
Level of Service	F	C		D	F		F	C		D	F	
Approach Delay (s)		67.3			92.1			74.5			103.3	
Approach LOS		E			F			E			F	

Intersection Summary			
HCM Average Control Delay	84.5	HCM Level of Service	F
HCM Volume to Capacity ratio	1.16		
Actuated Cycle Length (s)	120.0	Sum of lost time (s)	16.0
Intersection Capacity Utilization	120.2%	ICU Level of Service	H
Analysis Period (min)	15		

c Critical Lane Group

Movement	EBL	EBT	EBR	WBL	WBT	WBR	NBL	NBT	NBR	SBL	SBT	SBR
Lane Configurations												
Ideal Flow (vphpl)	1900	1900	1900	1900	1900	1900	1900	1900	1900	1900	1900	1900
Total Lost time (s)		4.0		4.0	4.0			4.0		4.0	4.0	
Lane Util. Factor		1.00		0.95	0.95			0.95		1.00	0.95	
Frpb, ped/bikes		1.00		1.00	0.99			0.99		1.00	0.96	
Flpb, ped/bikes		1.00		1.00	1.00			1.00		1.00	1.00	
Frt		0.95		1.00	0.91			0.97		1.00	0.96	
Flt Protected		0.98		0.95	1.00			1.00		0.95	1.00	
Satd. Flow (prot)		1749		1681	1596			3411		1770	3261	
Flt Permitted		0.59		0.74	1.00			0.74		0.95	1.00	
Satd. Flow (perm)		1054		1302	1596			2517		1770	3261	
Volume (vph)	10	10	10	359	330	470	10	1165	245	110	1341	460
Peak-hour factor, PHF	0.95	0.95	0.95	0.95	0.95	0.95	0.95	0.95	0.95	0.95	0.95	0.95
Adj. Flow (vph)	11	11	11	378	347	495	11	1226	258	116	1412	484
RTOR Reduction (vph)	0	11	0	0	43	0	0	14	0	0	28	0
Lane Group Flow (vph)	0	22	0	378	799	0	0	1481	0	116	1868	0
Confl. Peds. (#/hr)	4					4	44		12	12		44
Turn Type	Perm			Perm			Perm			Prot		
Protected Phases		7			8			2		1	6	
Permitted Phases	7			8			2					
Actuated Green, G (s)		4.0		41.5	41.5			50.0		6.5	61.0	
Effective Green, g (s)		4.5		42.0	42.0			50.5		7.0	61.5	
Actuated g/C Ratio		0.04		0.35	0.35			0.42		0.06	0.51	
Clearance Time (s)		4.5		4.5	4.5			4.5		4.5	4.5	
Vehicle Extension (s)		2.0		2.0	2.0			2.0		2.0	2.0	
Lane Grp Cap (vph)		40		456	559			1059		103	1671	
v/s Ratio Prot										0.07	c0.57	
v/s Ratio Perm		c0.02		0.29	0.50			c0.59				
v/c Ratio		0.56		0.83	1.43			1.40		1.13	1.12	
Uniform Delay, d1		56.8		35.7	39.0			34.8		56.5	29.2	
Progression Factor		1.00		1.00	1.00			0.98		1.00	1.00	
Incremental Delay, d2		10.2		11.3	203.5			179.7		126.7	61.9	
Delay (s)		67.0		47.0	242.5			213.7		183.2	91.1	
Level of Service		E		D	F			F		F	F	
Approach Delay (s)		67.0			181.9			213.7			96.4	
Approach LOS		E			F			F			F	

Intersection Summary			
HCM Average Control Delay	155.0	HCM Level of Service	F
HCM Volume to Capacity ratio	1.37		
Actuated Cycle Length (s)	120.0	Sum of lost time (s)	16.0
Intersection Capacity Utilization	137.9%	ICU Level of Service	H
Analysis Period (min)	15		

c Critical Lane Group

Movement	EBL	EBT	EBR	WBL	WBT	WBR	NBL	NBT	NBR	SBL	SBT	SBR
Lane Configurations												
Ideal Flow (vphpl)	1900	1900	1900	1900	1900	1900	1900	1900	1900	1900	1900	1900
Total Lost time (s)	4.0	4.0		4.0	4.0		4.0	4.0		4.0	4.0	
Lane Util. Factor	0.97	0.95		1.00	0.95		1.00	0.95		1.00	0.95	
Frpb, ped/bikes	1.00	0.99		1.00	0.99		1.00	0.98		1.00	0.98	
Flpb, ped/bikes	1.00	1.00		1.00	1.00		1.00	1.00		1.00	1.00	
Frt	1.00	0.98		1.00	0.96		1.00	0.97		1.00	0.98	
Flt Protected	0.95	1.00		0.95	1.00		0.95	1.00		0.95	1.00	
Satd. Flow (prot)	3433	3417		1770	3370		1770	3391		1770	3393	
Flt Permitted	0.95	1.00		0.95	1.00		0.95	1.00		0.95	1.00	
Satd. Flow (perm)	3433	3417		1770	3370		1770	3391		1770	3393	
Volume (vph)	460	650	113	140	820	320	120	671	140	320	1180	220
Peak-hour factor, PHF	0.96	0.96	0.96	0.96	0.96	0.96	0.96	0.96	0.96	0.96	0.96	0.96
Adj. Flow (vph)	479	677	118	146	854	333	125	699	146	333	1229	229
RTOR Reduction (vph)	0	12	0	0	34	0	0	15	0	0	13	0
Lane Group Flow (vph)	479	783	0	146	1153	0	125	830	0	333	1445	0
Confl. Peds. (#/hr)	6		24	24		6	36		28	28		36
Turn Type	Prot			Prot			Prot			Prot		
Protected Phases	7	4		3	8		5	2		1	6	
Permitted Phases												
Actuated Green, G (s)	15.5	36.8		12.7	34.0		8.5	30.6		22.9	45.0	
Effective Green, g (s)	15.0	37.8		12.2	35.0		8.0	31.6		22.4	46.0	
Actuated g/C Ratio	0.12	0.31		0.10	0.29		0.07	0.26		0.19	0.38	
Clearance Time (s)	3.5	5.0		3.5	5.0		3.5	5.0		3.5	5.0	
Vehicle Extension (s)	2.0	2.0		2.0	2.0		2.0	2.0		2.0	2.0	
Lane Grp Cap (vph)	429	1076		180	983		118	893		330	1301	
v/s Ratio Prot	c0.14	c0.23		0.08	c0.34		0.07	0.24		c0.19	c0.43	
v/s Ratio Perm												
v/c Ratio	1.12	0.73		0.81	1.17		1.06	0.93		1.01	1.11	
Uniform Delay, d1	52.5	36.5		52.8	42.5		56.0	43.1		48.8	37.0	
Progression Factor	0.82	0.82		1.00	1.00		1.00	1.00		1.25	0.80	
Incremental Delay, d2	74.5	1.7		22.4	88.7		99.7	17.3		17.1	51.0	
Delay (s)	117.5	31.5		75.1	131.2		155.7	60.4		78.1	80.8	
Level of Service	F	C		E	F		F	E		E	F	
Approach Delay (s)		63.9			125.1			72.7			80.3	
Approach LOS		E			F			E			F	

Intersection Summary			
HCM Average Control Delay	86.1	HCM Level of Service	F
HCM Volume to Capacity ratio	1.17		
Actuated Cycle Length (s)	120.0	Sum of lost time (s)	20.0
Intersection Capacity Utilization	106.3%	ICU Level of Service	G
Analysis Period (min)	15		

c Critical Lane Group

Movement	EBL	EBT	EBR	WBL	WBT	WBR	NBL	NBT	NBR	SBL	SBT	SBR
Lane Configurations												
Ideal Flow (vphpl)	1900	1900	1900	1900	1900	1900	1900	1900	1900	1900	1900	1900
Total Lost time (s)		4.0						4.0		4.0	4.0	
Lane Util. Factor		1.00						0.95		0.97	0.95	
Frt		0.86						0.93		1.00	0.99	
Flt Protected		1.00						1.00		0.95	1.00	
Satd. Flow (prot)		1611						3284		3433	3496	
Flt Permitted		1.00						0.94		0.95	1.00	
Satd. Flow (perm)		1611						3075		3433	3496	
Volume (vph)	0	0	10	0	0	0	10	365	341	1600	669	60
Peak-hour factor, PHF	0.95	0.95	0.95	0.95	0.95	0.95	0.95	0.95	0.95	0.95	0.95	0.95
Adj. Flow (vph)	0	0	11	0	0	0	11	384	359	1684	704	63
RTOR Reduction (vph)	0	11	0	0	0	0	0	26	0	0	0	0
Lane Group Flow (vph)	0	0	0	0	0	0	0	728	0	1684	767	0
Turn Type										Prot		
Protected Phases								2		1	6	
Permitted Phases												
Actuated Green, G (s)		0.0						8.0		29.0	45.0	
Effective Green, g (s)		0.0						8.0		29.0	45.0	
Actuated g/C Ratio		0.00						0.18		0.64	1.00	
Clearance Time (s)								4.0		4.0	2.0	
Lane Grp Cap (vph)		0						547		2212	3496	
v/s Ratio Prot										c0.49	0.22	
v/s Ratio Perm								c0.24				
v/c Ratio		0.00						11.22dr		0.76	0.22	
Uniform Delay, d1		22.5						18.5		5.6	0.0	
Progression Factor		1.00						0.78		1.00	1.00	
Incremental Delay, d2		0.0						159.9		2.5	0.1	
Delay (s)		22.5						174.3		8.1	0.1	
Level of Service		C						F		A	A	
Approach Delay (s)		22.5			0.0			174.3			5.6	
Approach LOS		C			A			F			A	

Intersection Summary			
HCM Average Control Delay	45.2	HCM Level of Service	D
HCM Volume to Capacity ratio	0.88		
Actuated Cycle Length (s)	45.0	Sum of lost time (s)	8.0
Intersection Capacity Utilization	80.3%	ICU Level of Service	D
Analysis Period (min)	15		

dr Defacto Right Lane. Recode with 1 though lane as a right lane.

c Critical Lane Group

Movement	EBL	EBT	EBR	WBL	WBT	WBR	NBL	NBT	NBR	SBL	SBT	SBR
Lane Configurations												
Ideal Flow (vphpl)	1900	1900	1900	1900	1900	1900	1900	1900	1900	1900	1900	1900
Total Lost time (s)		4.0			4.0			4.0			4.0	
Lane Util. Factor		1.00			1.00			0.95			0.95	
Frpb, ped/bikes		0.97			0.95			0.98			0.99	
Flpb, ped/bikes		0.98			0.98			1.00			1.00	
Frt		0.98			0.94			0.98			0.99	
Flt Protected		0.98			0.99			1.00			1.00	
Satd. Flow (prot)		1705			1606			3389			3476	
Flt Permitted		0.84			0.88			0.87			0.88	
Satd. Flow (perm)		1453			1426			2945			3058	
Volume (vph)	80	100	34	60	70	110	41	506	90	60	799	40
Peak-hour factor, PHF	0.95	0.95	0.95	0.95	0.95	0.95	0.95	0.95	0.95	0.95	0.95	0.95
Adj. Flow (vph)	84	105	36	63	74	116	43	533	95	63	841	42
RTOR Reduction (vph)	0	15	0	0	68	0	0	30	0	0	7	0
Lane Group Flow (vph)	0	210	0	0	185	0	0	641	0	0	939	0
Confl. Peds. (#/hr)	100		100	100		100	100		100	100		100
Turn Type	Perm			Perm			Perm			Perm		
Protected Phases		4			8			2			6	
Permitted Phases	4			8			2			6		
Actuated Green, G (s)		15.0			15.0			22.0			22.0	
Effective Green, g (s)		15.0			15.0			22.0			22.0	
Actuated g/C Ratio		0.33			0.33			0.49			0.49	
Clearance Time (s)		4.0			4.0			4.0			4.0	
Lane Grp Cap (vph)		484			475			1440			1495	
v/s Ratio Prot												
v/s Ratio Perm		c0.14			0.13			0.22			c0.31	
v/c Ratio		0.43			0.39			0.45			0.63	
Uniform Delay, d1		11.7			11.5			7.5			8.5	
Progression Factor		1.00			1.00			1.00			1.00	
Incremental Delay, d2		2.8			2.4			1.0			2.0	
Delay (s)		14.5			13.9			8.5			10.5	
Level of Service		B			B			A			B	
Approach Delay (s)		14.5			13.9			8.5			10.5	
Approach LOS		B			B			A			B	

Intersection Summary			
HCM Average Control Delay	10.7	HCM Level of Service	B
HCM Volume to Capacity ratio	0.55		
Actuated Cycle Length (s)	45.0	Sum of lost time (s)	8.0
Intersection Capacity Utilization	73.8%	ICU Level of Service	D
Analysis Period (min)	15		
c Critical Lane Group			

Movement	EBL	EBT	EBR	WBL	WBT	WBR	NBL	NBT	NBR	SBL	SBT	SBR
Lane Configurations												
Ideal Flow (vphpl)	1900	1900	1900	1900	1900	1900	1900	1900	1900	1900	1900	1900
Total Lost time (s)		4.0			4.0			4.0			4.0	
Lane Util. Factor		1.00			1.00			0.95			0.91	
Frpb, ped/bikes		0.96			0.95			0.98			0.99	
Flpb, ped/bikes		0.98			0.98			1.00			1.00	
Frt		0.96			0.96			0.99			0.99	
Flt Protected		0.98			0.99			1.00			1.00	
Satd. Flow (prot)		1639			1645			3432			4960	
Flt Permitted		0.76			0.79			0.76			0.80	
Satd. Flow (perm)		1259			1317			2600			3985	
Volume (vph)	80	100	80	58	90	70	40	1059	72	80	1957	100
Peak-hour factor, PHF	0.95	0.95	0.95	0.95	0.95	0.95	0.95	0.95	0.95	0.95	0.95	0.95
Adj. Flow (vph)	84	105	84	61	95	74	42	1115	76	84	2060	105
RTOR Reduction (vph)	0	2	0	0	25	0	0	4	0	0	4	0
Lane Group Flow (vph)	0	271	0	0	205	0	0	1229	0	0	2245	0
Confl. Peds. (#/hr)	100		100	100		100	100		100	100		100
Turn Type	Perm			Perm			Perm			Perm		
Protected Phases		4			4			2			6	
Permitted Phases	4			4			2			6		
Actuated Green, G (s)		19.4			19.4			56.6			56.6	
Effective Green, g (s)		19.9			19.9			57.1			57.1	
Actuated g/C Ratio		0.23			0.23			0.67			0.67	
Clearance Time (s)		4.5			4.5			4.5			4.5	
Vehicle Extension (s)		2.0			2.0			2.0			2.0	
Lane Grp Cap (vph)		295			308			1747			2677	
v/s Ratio Prot												
v/s Ratio Perm		c0.22			0.16			0.47			c0.56	
v/c Ratio		0.92			0.67			0.70			0.84	
Uniform Delay, d1		31.8			29.5			8.7			10.5	
Progression Factor		1.00			1.00			1.00			1.00	
Incremental Delay, d2		31.9			4.2			2.4			3.3	
Delay (s)		63.7			33.7			11.1			13.8	
Level of Service		E			C			B			B	
Approach Delay (s)		63.7			33.7			11.1			13.8	
Approach LOS		E			C			B			B	

Intersection Summary			
HCM Average Control Delay	17.5	HCM Level of Service	B
HCM Volume to Capacity ratio	0.86		
Actuated Cycle Length (s)	85.0	Sum of lost time (s)	8.0
Intersection Capacity Utilization	112.8%	ICU Level of Service	H
Analysis Period (min)	15		
c Critical Lane Group			

Movement	EBL	EBT	EBR	WBL	WBT	WBR	NBL	NBT	NBR	SBL	SBT	SBR
Lane Configurations												
Ideal Flow (vphpl)	1900	1900	1900	1900	1900	1900	1900	1900	1900	1900	1900	1900
Total Lost time (s)	4.0	4.0		4.0	4.0		4.0	4.0		4.0	4.0	
Lane Util. Factor	1.00	0.95		1.00	0.95		1.00	1.00		1.00	1.00	
Frpb, ped/bikes	1.00	0.99		1.00	0.99		1.00	1.00		1.00	1.00	
Flpb, ped/bikes	1.00	1.00		1.00	1.00		1.00	1.00		0.99	1.00	
Frt	1.00	0.96		1.00	0.98		1.00	0.99		1.00	0.98	
Flt Protected	0.95	1.00		0.95	1.00		0.95	1.00		0.95	1.00	
Satd. Flow (prot)	1770	3375		1764	3454		1768	1830		1745	1815	
Flt Permitted	0.17	1.00		0.18	1.00		0.24	1.00		0.44	1.00	
Satd. Flow (perm)	324	3375		328	3454		449	1830		815	1815	
Volume (vph)	180	521	190	93	934	114	160	381	39	206	600	110
Peak-hour factor, PHF	0.95	0.95	0.95	0.95	0.95	0.95	0.95	0.95	0.95	0.95	0.95	0.95
Adj. Flow (vph)	189	548	200	98	983	120	168	401	41	217	632	116
RTOR Reduction (vph)	0	46	0	0	11	0	0	5	0	0	3	0
Lane Group Flow (vph)	189	702	0	98	1092	0	168	437	0	217	745	0
Confl. Peds. (#/hr)	30		12	12		30	6		54	54		6
Turn Type	Perm			Perm			Perm			Perm		
Protected Phases		4			8			2			6	
Permitted Phases	4			8			2			6		
Actuated Green, G (s)	24.0	24.0		24.0	24.0		49.5	49.5		49.5	49.5	
Effective Green, g (s)	23.0	23.0		23.0	23.0		49.0	49.0		49.0	49.0	
Actuated g/C Ratio	0.29	0.29		0.29	0.29		0.61	0.61		0.61	0.61	
Clearance Time (s)	3.0	3.0		3.0	3.0		3.5	3.5		3.5	3.5	
Lane Grp Cap (vph)	93	970		94	993		275	1121		499	1112	
v/s Ratio Prot		0.21			0.32			0.24			c0.41	
v/s Ratio Perm	c0.58			0.30			0.37			0.27		
v/c Ratio	2.03	0.72		1.04	1.10		0.61	0.39		0.43	0.67	
Uniform Delay, d1	28.5	25.6		28.5	28.5		9.6	7.9		8.2	10.2	
Progression Factor	1.00	1.00		0.88	0.89		1.00	1.00		1.00	1.00	
Incremental Delay, d2	499.9	4.7		93.8	57.0		9.7	1.0		2.7	3.2	
Delay (s)	528.4	30.3		118.9	82.4		19.3	8.9		10.9	13.4	
Level of Service	F	C		F	F		B	A		B	B	
Approach Delay (s)		130.8			85.3			11.8			12.9	
Approach LOS		F			F			B			B	

Intersection Summary			
HCM Average Control Delay	65.9	HCM Level of Service	E
HCM Volume to Capacity ratio	1.10		
Actuated Cycle Length (s)	80.0	Sum of lost time (s)	8.0
Intersection Capacity Utilization	104.5%	ICU Level of Service	G
Analysis Period (min)	15		
c Critical Lane Group			

Movement	EBL	EBT	EBR	WBL	WBT	WBR	NBL	NBT	NBR	SBL	SBT	SBR
Lane Configurations												
Ideal Flow (vphpl)	1900	1900	1900	1900	1900	1900	1900	1900	1900	1900	1900	1900
Total Lost time (s)	4.0	4.0		4.0	4.0			4.0			4.0	
Lane Util. Factor	1.00	0.95		1.00	0.95			0.95			0.95	
Frpb, ped/bikes	1.00	0.99		1.00	1.00			1.00			1.00	
Flpb, ped/bikes	1.00	1.00		0.99	1.00			1.00			1.00	
Frt	1.00	0.97		1.00	0.99			0.98			0.98	
Flt Protected	0.95	1.00		0.95	1.00			0.99			0.99	
Satd. Flow (prot)	1766	3413		1750	3496			3395			3426	
Flt Permitted	0.16	1.00		0.29	1.00			0.65			0.69	
Satd. Flow (perm)	298	3413		542	3496			2228			2397	
Volume (vph)	80	586	130	71	961	73	120	281	79	130	380	70
Peak-hour factor, PHF	0.95	0.95	0.95	0.95	0.95	0.95	0.95	0.95	0.95	0.95	0.95	0.95
Adj. Flow (vph)	84	617	137	75	1012	77	126	296	83	137	400	74
RTOR Reduction (vph)	0	24	0	0	7	0	0	21	0	0	14	0
Lane Group Flow (vph)	84	730	0	75	1082	0	0	484	0	0	597	0
Confl. Peds. (#/hr)	18		54	54		18	4		18	18		4
Turn Type	Perm			Perm			Perm			Perm		
Protected Phases		4			8			2			6	
Permitted Phases	4			8			2			6		
Actuated Green, G (s)	38.0	38.0		38.0	38.0			32.0			32.0	
Effective Green, g (s)	39.0	39.0		39.0	39.0			33.0			33.0	
Actuated g/C Ratio	0.49	0.49		0.49	0.49			0.41			0.41	
Clearance Time (s)	5.0	5.0		5.0	5.0			5.0			5.0	
Lane Grp Cap (vph)	145	1664		264	1704			919			989	
v/s Ratio Prot		0.21			c0.31							
v/s Ratio Perm	0.28			0.14				0.22			c0.25	
v/c Ratio	0.58	0.44		0.28	0.63			0.53			0.60	
Uniform Delay, d1	14.6	13.4		12.2	15.2			17.6			18.4	
Progression Factor	0.97	0.90		1.33	1.42			0.56			1.00	
Incremental Delay, d2	12.7	0.7		2.1	1.5			1.4			2.7	
Delay (s)	26.9	12.8		18.4	23.1			11.3			21.1	
Level of Service	C	B		B	C			B			C	
Approach Delay (s)		14.2			22.8			11.3			21.1	
Approach LOS		B			C			B			C	

Intersection Summary			
HCM Average Control Delay	18.3	HCM Level of Service	B
HCM Volume to Capacity ratio	0.62		
Actuated Cycle Length (s)	80.0	Sum of lost time (s)	8.0
Intersection Capacity Utilization	78.4%	ICU Level of Service	D
Analysis Period (min)	15		
c Critical Lane Group			

Movement	EBL	EBT	EBR	WBL	WBT	WBR	NBL	NBT	NBR	SBL	SBT	SBR
Lane Configurations												
Ideal Flow (vphpl)	1900	1900	1900	1900	1900	1900	1900	1900	1900	1900	1900	1900
Total Lost time (s)	4.0	4.0		4.0	4.0			4.0			4.0	
Lane Util. Factor	1.00	0.95		1.00	0.95			0.95			0.95	
Frpb, ped/bikes	1.00	1.00		1.00	1.00			0.99			1.00	
Flpb, ped/bikes	1.00	1.00		0.99	1.00			1.00			1.00	
Frt	1.00	0.99		1.00	0.98			0.96			0.98	
Flt Protected	0.95	1.00		0.95	1.00			0.99			0.99	
Satd. Flow (prot)	1766	3481		1747	3457			3366			3423	
Flt Permitted	0.16	1.00		0.29	1.00			0.79			0.73	
Satd. Flow (perm)	294	3481		530	3457			2693			2511	
Volume (vph)	50	693	61	125	946	139	49	248	92	157	476	80
Peak-hour factor, PHF	0.96	0.96	0.96	0.96	0.96	0.96	0.96	0.96	0.96	0.96	0.96	0.96
Adj. Flow (vph)	52	722	64	130	985	145	51	258	96	164	496	83
RTOR Reduction (vph)	0	8	0	0	15	0	0	37	0	0	12	0
Lane Group Flow (vph)	52	778	0	130	1115	0	0	368	0	0	731	0
Confl. Peds. (#/hr)	13		71	71		13	22		22	22		22
Turn Type	Perm			Perm			Perm			Perm		
Protected Phases		4			8			2			6	
Permitted Phases	4			8			2			6		
Actuated Green, G (s)	41.5	41.5		41.5	41.5			32.0			32.0	
Effective Green, g (s)	41.0	41.0		41.0	41.0			31.0			31.0	
Actuated g/C Ratio	0.51	0.51		0.51	0.51			0.39			0.39	
Clearance Time (s)	3.5	3.5		3.5	3.5			3.0			3.0	
Lane Grp Cap (vph)	151	1784		272	1772			1044			973	
v/s Ratio Prot		0.22			c0.32							
v/s Ratio Perm	0.18			0.25				0.14			c0.29	
v/c Ratio	0.34	0.44		0.48	0.63			0.35			0.75	
Uniform Delay, d1	11.5	12.2		12.6	14.0			17.4			21.2	
Progression Factor	1.21	1.20		1.00	1.00			0.64			1.00	
Incremental Delay, d2	5.5	0.7		5.9	1.7			0.9			5.3	
Delay (s)	19.4	15.4		18.5	15.7			11.9			26.5	
Level of Service	B	B		B	B			B			C	
Approach Delay (s)		15.7			16.0			11.9			26.5	
Approach LOS		B			B			B			C	

Intersection Summary			
HCM Average Control Delay	17.8	HCM Level of Service	B
HCM Volume to Capacity ratio	0.68		
Actuated Cycle Length (s)	80.0	Sum of lost time (s)	8.0
Intersection Capacity Utilization	103.6%	ICU Level of Service	G
Analysis Period (min)	15		
c Critical Lane Group			

Movement	EBT	EBR	WBL	WBT	NBL	NBR
Lane Configurations						
Ideal Flow (vphpl)	1900	1900	1900	1900	1900	1900
Total Lost time (s)	4.0		4.0	4.0	4.0	
Lane Util. Factor	0.95		1.00	0.95	1.00	
Frpb, ped/bikes	0.94		1.00	1.00	1.00	
Flpb, ped/bikes	1.00		1.00	1.00	1.00	
Frt	0.98		1.00	1.00	0.96	
Flt Protected	1.00		0.95	1.00	0.96	
Satd. Flow (prot)	3233		1770	3539	1733	
Flt Permitted	1.00		0.95	1.00	0.96	
Satd. Flow (perm)	3233		1770	3539	1733	
Volume (vph)	793	151	88	1099	111	40
Peak-hour factor, PHF	0.95	0.95	0.95	0.95	0.95	0.95
Adj. Flow (vph)	835	159	93	1157	117	42
RTOR Reduction (vph)	0	0	0	0	0	0
Lane Group Flow (vph)	994	0	93	1157	159	0
Confl. Peds. (#/hr)		146	266			
Turn Type			Prot			
Protected Phases	4		3	8	2	
Permitted Phases						
Actuated Green, G (s)	52.9		8.6	65.5	11.5	
Effective Green, g (s)	52.9		8.6	65.5	11.5	
Actuated g/C Ratio	0.62		0.10	0.77	0.14	
Clearance Time (s)	4.0		4.0	4.0	4.0	
Vehicle Extension (s)	3.0		3.0	3.0	3.0	
Lane Grp Cap (vph)	2012		179	2727	234	
v/s Ratio Prot	c0.31		c0.05	0.33	c0.09	
v/s Ratio Perm						
v/c Ratio	0.49		0.52	0.42	0.68	
Uniform Delay, d1	8.8		36.2	3.3	35.0	
Progression Factor	1.00		0.85	1.80	0.88	
Incremental Delay, d2	0.9		1.0	0.2	7.2	
Delay (s)	9.6		31.9	6.2	37.8	
Level of Service	A		C	A	D	
Approach Delay (s)	9.6			8.1	37.8	
Approach LOS	A			A	D	

Intersection Summary			
HCM Average Control Delay	10.7	HCM Level of Service	B
HCM Volume to Capacity ratio	0.53		
Actuated Cycle Length (s)	85.0	Sum of lost time (s)	12.0
Intersection Capacity Utilization	51.3%	ICU Level of Service	A
Analysis Period (min)	15		
c Critical Lane Group			

Movement	EBL	EBT	EBR	WBL	WBT	WBR	NBL	NBT	NBR	SBL	SBT	SBR
Lane Configurations												
Ideal Flow (vphpl)	1900	1900	1900	1900	1900	1900	1900	1900	1900	1900	1900	1900
Total Lost time (s)	4.0	4.0		4.0	4.0		4.0	4.0		4.0	4.0	
Lane Util. Factor	1.00	0.95		1.00	0.95		1.00	0.95		1.00	0.95	
Frpb, ped/bikes	1.00	0.93		1.00	0.98		1.00	0.99		1.00	0.98	
Flpb, ped/bikes	0.97	1.00		0.95	1.00		1.00	1.00		1.00	1.00	
Frt	1.00	0.94		1.00	0.98		1.00	0.98		1.00	0.97	
Flt Protected	0.95	1.00		0.95	1.00		0.95	1.00		0.95	1.00	
Satd. Flow (prot)	1721	3096		1690	3416		1770	3437		1770	3361	
Flt Permitted	0.15	1.00		0.21	1.00		0.95	1.00		0.95	1.00	
Satd. Flow (perm)	279	3096		366	3416		1770	3437		1770	3361	
Volume (vph)	146	420	267	128	732	90	135	505	59	100	1354	320
Peak-hour factor, PHF	0.95	0.95	0.95	0.95	0.95	0.95	0.95	0.95	0.95	0.95	0.95	0.95
Adj. Flow (vph)	154	442	281	135	771	95	142	532	62	105	1425	337
RTOR Reduction (vph)	0	119	0	0	11	0	0	9	0	0	23	0
Lane Group Flow (vph)	154	604	0	135	855	0	142	585	0	105	1739	0
Confl. Peds. (#/hr)	72		137	137		72			58	58		92
Turn Type	Perm			Perm			Prot			Prot		
Protected Phases		4			8		5	2		1	6	
Permitted Phases	4			8								
Actuated Green, G (s)	25.5	25.5		25.5	25.5		10.7	37.9		8.1	35.3	
Effective Green, g (s)	26.0	26.0		26.0	26.0		11.2	38.4		8.6	35.8	
Actuated g/C Ratio	0.31	0.31		0.31	0.31		0.13	0.45		0.10	0.42	
Clearance Time (s)	4.5	4.5		4.5	4.5		4.5	4.5		4.5	4.5	
Vehicle Extension (s)	2.0	2.0		2.0	2.0		2.0	2.0		2.0	2.0	
Lane Grp Cap (vph)	85	947		112	1045		233	1553		179	1416	
v/s Ratio Prot		0.20			0.25		c0.08	c0.17		0.06	c0.52	
v/s Ratio Perm	c0.55			0.37								
v/c Ratio	1.81	0.64		1.21	0.82		0.61	0.38		0.59	1.23	
Uniform Delay, d1	29.5	25.4		29.5	27.3		34.8	15.4		36.5	24.6	
Progression Factor	0.71	0.56		1.00	1.00		0.95	1.32		1.00	1.00	
Incremental Delay, d2	403.1	0.9		150.4	4.8		3.0	0.7		3.1	109.2	
Delay (s)	424.1	15.2		179.9	32.1		36.1	21.0		39.6	133.8	
Level of Service	F	B		F	C		D	C		D	F	
Approach Delay (s)		87.0			52.1			24.0			128.5	
Approach LOS		F			D			C			F	

Intersection Summary			
HCM Average Control Delay	86.1	HCM Level of Service	F
HCM Volume to Capacity ratio	1.41		
Actuated Cycle Length (s)	85.0	Sum of lost time (s)	16.0
Intersection Capacity Utilization	101.3%	ICU Level of Service	G
Analysis Period (min)	15		

c Critical Lane Group

Movement	WBL	WBR	NBT	NBR	SBL	SBT
Lane Configurations						
Sign Control	Stop		Free			Free
Grade	0%		0%			0%
Volume (veh/h)	20	33	746	20	20	1706
Peak Hour Factor	0.95	0.95	0.95	0.95	0.95	0.95
Hourly flow rate (vph)	21	35	785	21	21	1796
Pedestrians	34		33			34
Lane Width (ft)	12.0		12.0			12.0
Walking Speed (ft/s)	4.0		4.0			4.0
Percent Blockage	3		3			3
Right turn flare (veh)						
Median type	None					
Median storage veh)						
Upstream signal (ft)			230			471
pX, platoon unblocked	0.56	0.90			0.90	
vC, conflicting volume	1803	471			840	
vC1, stage 1 conf vol						
vC2, stage 2 conf vol						
vCu, unblocked vol	1130	310			718	
tC, single (s)	6.8	6.9			4.1	
tC, 2 stage (s)						
tF (s)	3.5	3.3			2.2	
p0 queue free %	79	94			97	
cM capacity (veh/h)	101	586			773	

Direction, Lane #	WB 1	NB 1	NB 2	SB 1	SB 2	SB 3
Volume Total	56	524	283	21	898	898
Volume Left	21	0	0	21	0	0
Volume Right	35	0	21	0	0	0
cSH	208	1700	1700	773	1700	1700
Volume to Capacity	0.27	0.31	0.17	0.03	0.53	0.53
Queue Length 95th (ft)	26	0	0	2	0	0
Control Delay (s)	28.5	0.0	0.0	9.8	0.0	0.0
Lane LOS	D			A		
Approach Delay (s)	28.5	0.0		0.1		
Approach LOS	D					

Intersection Summary			
Average Delay	0.7		
Intersection Capacity Utilization	64.5%	ICU Level of Service	C
Analysis Period (min)	15		

Movement	EBL	EBT	EBR	WBL	WBT	WBR	NBL	NBT	NBR	SBL	SBT	SBR
Lane Configurations												
Ideal Flow (vphpl)	1900	1900	1900	1900	1900	1900	1900	1900	1900	1900	1900	1900
Total Lost time (s)		4.0		4.0	4.0			4.0		4.0	4.0	
Lane Util. Factor		0.91		1.00	0.95			1.00		1.00	1.00	
Frpb, ped/bikes		1.00		1.00	1.00			0.99		1.00	0.99	
Flpb, ped/bikes		1.00		1.00	1.00			1.00		0.98	1.00	
Frt		0.99		1.00	0.98			0.97		1.00	0.96	
Flt Protected		0.99		0.95	1.00			0.99		0.95	1.00	
Satd. Flow (prot)		4982		1764	3448			1753		1734	1763	
Flt Permitted		0.65		0.24	1.00			0.10		0.39	1.00	
Satd. Flow (perm)		3271		447	3448			179		708	1763	
Volume (vph)	210	720	50	71	1092	191	100	189	90	200	493	200
Peak-hour factor, PHF	0.95	0.95	0.95	0.95	0.95	0.95	0.95	0.95	0.95	0.95	0.95	0.95
Adj. Flow (vph)	221	758	53	75	1149	201	105	199	95	211	519	211
RTOR Reduction (vph)	0	7	0	0	17	0	0	13	0	0	17	0
Lane Group Flow (vph)	0	1025	0	75	1333	0	0	386	0	211	713	0
Confl. Peds. (#/hr)	24		18	18		24	24		48	48		24
Turn Type	Perm			Perm			Perm			Perm		
Protected Phases		4			8			2			6	
Permitted Phases	4			8			2			6		
Actuated Green, G (s)		51.0		51.0	51.0			24.0		24.0	24.0	
Effective Green, g (s)		52.0		52.0	52.0			25.0		25.0	25.0	
Actuated g/C Ratio		0.61		0.61	0.61			0.29		0.29	0.29	
Clearance Time (s)		5.0		5.0	5.0			5.0		5.0	5.0	
Lane Grp Cap (vph)		2001		273	2109			53		208	519	
v/s Ratio Prot					c0.39						0.40	
v/s Ratio Perm		0.31		0.17				c2.15		0.30		
v/c Ratio		1.39dl		0.27	0.63			7.28		1.01	1.37	
Uniform Delay, d1		9.3		7.7	10.4			30.0		30.0	30.0	
Progression Factor		1.00		1.00	1.00			1.00		1.00	1.00	
Incremental Delay, d2		0.9		2.5	1.5			2862.7		66.2	180.2	
Delay (s)		10.3		10.2	11.9			2892.7		96.2	210.2	
Level of Service		B		B	B			F		F	F	
Approach Delay (s)		10.3			11.8			2892.7			184.6	
Approach LOS		B			B			F			F	

Intersection Summary			
HCM Average Control Delay	356.9	HCM Level of Service	F
HCM Volume to Capacity ratio	2.80		
Actuated Cycle Length (s)	85.0	Sum of lost time (s)	8.0
Intersection Capacity Utilization	159.0%	ICU Level of Service	H
Analysis Period (min)	15		

dl Defacto Left Lane. Recode with 1 though lane as a left lane.
c Critical Lane Group

Movement	EBL	EBT	EBR	WBL	WBT	WBR	NBL	NBT	NBR	SBL	SBT	SBR
Lane Configurations												
Ideal Flow (vphpl)	1900	1900	1900	1900	1900	1900	1900	1900	1900	1900	1900	1900
Total Lost time (s)		4.0			4.0		4.0	4.0		4.0	4.0	
Lane Util. Factor		0.91			0.91		1.00	1.00		1.00	1.00	
Frpb, ped/bikes		1.00			1.00		1.00	1.00		1.00	0.99	
Flpb, ped/bikes		1.00			1.00		1.00	1.00		1.00	1.00	
Frt		1.00			0.99		1.00	0.97		1.00	0.97	
Flt Protected		1.00			1.00		0.95	1.00		0.95	1.00	
Satd. Flow (prot)		5034			5008		1762	1801		1770	1801	
Flt Permitted		0.74			0.81		0.20	1.00		0.20	1.00	
Satd. Flow (perm)		3729			4054		362	1801		363	1801	
Volume (vph)	80	920	30	71	1184	111	70	309	87	150	361	80
Peak-hour factor, PHF	0.95	0.95	0.95	0.95	0.95	0.95	0.95	0.95	0.95	0.95	0.95	0.95
Adj. Flow (vph)	84	968	32	75	1246	117	74	325	92	158	380	84
RTOR Reduction (vph)	0	4	0	0	13	0	0	13	0	0	10	0
Lane Group Flow (vph)	0	1080	0	0	1425	0	74	404	0	158	454	0
Confl. Peds. (#/hr)			18	18			12					18
Turn Type	Perm			Perm			Perm			Perm		
Protected Phases		4			8			2			6	
Permitted Phases	4			8			2			6		
Actuated Green, G (s)		50.0			50.0		19.0	19.0		19.0	19.0	
Effective Green, g (s)		51.5			51.5		20.5	20.5		20.5	20.5	
Actuated g/C Ratio		0.64			0.64		0.26	0.26		0.26	0.26	
Clearance Time (s)		5.5			5.5		5.5	5.5		5.5	5.5	
Lane Grp Cap (vph)		2401			2610		93	462		93	462	
v/s Ratio Prot								0.22			0.25	
v/s Ratio Perm		0.29			c0.35		0.20			c0.43		
v/c Ratio		0.45			0.55		0.80	0.88		1.70	0.98	
Uniform Delay, d1		7.1			7.8		27.8	28.5		29.8	29.6	
Progression Factor		1.00			0.56		1.00	1.00		1.17	1.18	
Incremental Delay, d2		0.6			0.7		49.1	20.1		350.9	35.0	
Delay (s)		7.8			5.0		76.9	48.6		385.8	69.9	
Level of Service		A			A		E	D		F	E	
Approach Delay (s)		7.8			5.0			52.9			150.1	
Approach LOS		A			A			D			F	

Intersection Summary			
HCM Average Control Delay	37.1	HCM Level of Service	D
HCM Volume to Capacity ratio	0.87		
Actuated Cycle Length (s)	80.0	Sum of lost time (s)	8.0
Intersection Capacity Utilization	90.1%	ICU Level of Service	E
Analysis Period (min)	15		

c Critical Lane Group

Movement	EBL	EBT	EBR	WBL	WBT	WBR	NBL	NBT	NBR	SBL	SBT	SBR
Lane Configurations												
Ideal Flow (vphpl)	1900	1900	1900	1900	1900	1900	1900	1900	1900	1900	1900	1900
Total Lost time (s)		4.0			4.0			4.0			4.0	
Lane Util. Factor		0.91			0.91			0.95			0.95	
Frpb, ped/bikes		1.00			1.00			0.99			1.00	
Flpb, ped/bikes		1.00			1.00			1.00			1.00	
Frt		0.99			0.99			0.97			0.98	
Flt Protected		1.00			1.00			0.99			0.99	
Satd. Flow (prot)		5022			4988			3404			3432	
Flt Permitted		0.75			0.80			0.70			0.80	
Satd. Flow (perm)		3784			4020			2386			2766	
Volume (vph)	71	1036	60	67	1262	146	40	183	46	107	461	74
Peak-hour factor, PHF	0.95	0.95	0.95	0.95	0.95	0.95	0.95	0.95	0.95	0.95	0.95	0.95
Adj. Flow (vph)	75	1091	63	71	1328	154	42	193	48	113	485	78
RTOR Reduction (vph)	0	7	0	0	17	0	0	22	0	0	13	0
Lane Group Flow (vph)	0	1222	0	0	1536	0	0	261	0	0	663	0
Confl. Peds. (#/hr)	17		19	19		17	12		16	16		12
Turn Type	Perm			Perm			Perm			Perm		
Protected Phases		4			8			2			6	
Permitted Phases	4			8			2			6		
Actuated Green, G (s)		50.0			50.0			19.0			19.0	
Effective Green, g (s)		51.5			51.5			20.5			20.5	
Actuated g/C Ratio		0.64			0.64			0.26			0.26	
Clearance Time (s)		5.5			5.5			5.5			5.5	
Lane Grp Cap (vph)		2436			2588			611			709	
v/s Ratio Prot												
v/s Ratio Perm		0.32			c0.38			0.11			c0.24	
v/c Ratio		0.50			0.59			0.43			0.94	
Uniform Delay, d1		7.5			8.2			24.9			29.1	
Progression Factor		0.65			1.00			1.00			0.48	
Incremental Delay, d2		0.6			1.0			2.2			20.4	
Delay (s)		5.5			9.2			27.0			34.3	
Level of Service		A			A			C			C	
Approach Delay (s)		5.5			9.2			27.0			34.3	
Approach LOS		A			A			C			C	

Intersection Summary			
HCM Average Control Delay	13.9	HCM Level of Service	B
HCM Volume to Capacity ratio	0.69		
Actuated Cycle Length (s)	80.0	Sum of lost time (s)	8.0
Intersection Capacity Utilization	120.6%	ICU Level of Service	H
Analysis Period (min)	15		
c Critical Lane Group			

Movement	EBL	EBT	EBR	WBL	WBT	WBR	NBL	NBT	NBR	SBL	SBT	SBR
Lane Configurations												
Ideal Flow (vphpl)	1900	1900	1900	1900	1900	1900	1900	1900	1900	1900	1900	1900
Total Lost time (s)		4.0			4.0			4.0			4.0	
Lane Util. Factor		0.91			0.91			1.00			1.00	
Frpb, ped/bikes		1.00			0.98			1.00			0.94	
Flpb, ped/bikes		1.00			1.00			1.00			1.00	
Frt		1.00			0.99			0.93			0.92	
Flt Protected		1.00			1.00			0.98			0.98	
Satd. Flow (prot)		5073			4942			1695			1589	
Flt Permitted		0.86			0.93			0.88			0.86	
Satd. Flow (perm)		4359			4583			1530			1399	
Volume (vph)	31	1268	10	10	1403	100	10	0	10	54	0	73
Peak-hour factor, PHF	0.95	0.95	0.95	0.95	0.95	0.95	0.95	0.95	0.95	0.95	0.95	0.95
Adj. Flow (vph)	33	1335	11	11	1477	105	11	0	11	57	0	77
RTOR Reduction (vph)	0	1	0	0	0	0	0	9	0	0	0	0
Lane Group Flow (vph)	0	1378	0	0	1593	0	0	13	0	0	134	0
Confl. Peds. (#/hr)						98						98
Turn Type	Perm			Perm			Perm			Perm		
Protected Phases		4			8			2			6	
Permitted Phases	4			8			2			6		
Actuated Green, G (s)		63.1			63.1			13.9			13.9	
Effective Green, g (s)		63.1			63.1			13.9			13.9	
Actuated g/C Ratio		0.74			0.74			0.16			0.16	
Clearance Time (s)		4.0			4.0			4.0			4.0	
Vehicle Extension (s)		3.0			3.0			3.0			3.0	
Lane Grp Cap (vph)		3236			3402			250			229	
v/s Ratio Prot												
v/s Ratio Perm		0.32			c0.35			0.01			c0.10	
v/c Ratio		0.43			0.47			0.05			0.59	
Uniform Delay, d1		4.1			4.3			30.0			32.9	
Progression Factor		1.00			1.04			1.00			1.07	
Incremental Delay, d2		0.4			0.1			0.1			3.4	
Delay (s)		4.5			4.6			30.1			38.5	
Level of Service		A			A			C			D	
Approach Delay (s)		4.5			4.6			30.1			38.5	
Approach LOS		A			A			C			D	

Intersection Summary			
HCM Average Control Delay	6.2	HCM Level of Service	A
HCM Volume to Capacity ratio	0.49		
Actuated Cycle Length (s)	85.0	Sum of lost time (s)	8.0
Intersection Capacity Utilization	77.3%	ICU Level of Service	D
Analysis Period (min)	15		
c Critical Lane Group			

Movement	EBL	EBT	EBR	WBL	WBT	WBR	NBL	NBT	NBR	SBL	SBT	SBR
Lane Configurations												
Ideal Flow (vphpl)	1900	1900	1900	1900	1900	1900	1900	1900	1900	1900	1900	1900
Total Lost time (s)		4.0			4.0		4.0	4.0		4.0	4.0	
Lane Util. Factor		0.91			0.91		1.00	0.95		1.00	0.95	
Frpb, ped/bikes		1.00			0.99		1.00	0.99		1.00	0.99	
Flpb, ped/bikes		1.00			1.00		1.00	1.00		0.99	1.00	
Frt		0.98			0.98		1.00	0.97		1.00	0.97	
Flt Protected		0.99			0.99		0.95	1.00		0.95	1.00	
Satd. Flow (prot)		4932			4920		1770	3417		1746	3426	
Flt Permitted		0.64			0.64		0.13	1.00		0.37	1.00	
Satd. Flow (perm)		3179			3171		246	3417		674	3426	
Volume (vph)	157	988	187	200	1146	198	120	410	90	363	1136	237
Peak-hour factor, PHF	0.95	0.95	0.95	0.95	0.95	0.95	0.95	0.95	0.95	0.95	0.95	0.95
Adj. Flow (vph)	165	1040	197	211	1206	208	126	432	95	382	1196	249
RTOR Reduction (vph)	0	23	0	0	25	0	0	21	0	0	19	0
Lane Group Flow (vph)	0	1379	0	0	1600	0	126	506	0	382	1426	0
Confl. Peds. (#/hr)	40		9			40	25		31	31		25
Turn Type	Perm			pm+pt			Perm			Perm		
Protected Phases		4		3	8			2			6	
Permitted Phases	4			8			2			6		
Actuated Green, G (s)		45.2			45.2		29.3	29.3		29.3	29.3	
Effective Green, g (s)		46.7			46.7		30.3	30.3		30.3	30.3	
Actuated g/C Ratio		0.55			0.55		0.36	0.36		0.36	0.36	
Clearance Time (s)		5.5			5.5		5.0	5.0		5.0	5.0	
Vehicle Extension (s)		2.0			2.0		2.0	2.0		2.0	2.0	
Lane Grp Cap (vph)		1747			1742		88	1218		240	1221	
v/s Ratio Prot								0.15			0.42	
v/s Ratio Perm		0.43			c0.50		0.51			c0.57		
v/c Ratio		1.06dl			1.55dl		1.43	0.42		1.59	1.17	
Uniform Delay, d1		15.2			17.4		27.3	20.7		27.3	27.3	
Progression Factor		1.34			1.00		1.26	1.28		0.51	0.49	
Incremental Delay, d2		2.1			8.0		245.2	1.0		275.4	80.0	
Delay (s)		22.5			25.4		279.7	27.4		289.5	93.5	
Level of Service		C			C		F	C		F	F	
Approach Delay (s)		22.5			25.4			76.1			134.5	
Approach LOS		C			C			E			F	

Intersection Summary			
HCM Average Control Delay	66.9	HCM Level of Service	E
HCM Volume to Capacity ratio	1.18		
Actuated Cycle Length (s)	85.0	Sum of lost time (s)	8.0
Intersection Capacity Utilization	117.0%	ICU Level of Service	H
Analysis Period (min)	15		

dl Defacto Left Lane. Recode with 1 though lane as a left lane.
c Critical Lane Group

Movement	EBL	EBT	EBR	WBL	WBT	WBR	NBL	NBT	NBR	SBL	SBT	SBR
Lane Configurations												
Ideal Flow (vphpl)	1900	1900	1900	1900	1900	1900	1900	1900	1900	1900	1900	1900
Total Lost time (s)		4.0			4.0			4.0	4.0		4.0	
Lane Util. Factor		0.91			0.91			1.00	1.00		1.00	
Frpb, ped/bikes		1.00			0.99			1.00	0.88		0.97	
Flpb, ped/bikes		1.00			1.00			0.97	1.00		0.95	
Frt		1.00			0.99			1.00	0.85		0.96	
Flt Protected		1.00			1.00			0.98	1.00		0.98	
Satd. Flow (prot)		5058			5005			1769	1395		1603	
Flt Permitted		0.83			0.82			0.84	1.00		0.81	
Satd. Flow (perm)		4206			4109			1519	1395		1330	
Volume (vph)	40	1408	23	50	1479	90	35	46	30	100	40	60
Peak-hour factor, PHF	0.95	0.95	0.95	0.95	0.95	0.95	0.95	0.95	0.95	0.95	0.95	0.95
Adj. Flow (vph)	42	1482	24	53	1557	95	37	48	32	105	42	63
RTOR Reduction (vph)	0	2	0	0	8	0	0	0	18	0	15	0
Lane Group Flow (vph)	0	1546	0	0	1697	0	0	85	14	0	195	0
Confl. Peds. (#/hr)	100		100	100		100	100		100	100		100
Turn Type	Perm			Perm			Perm		Perm	Perm		
Protected Phases		4			8			2			6	
Permitted Phases	4			8			2		2	6		
Actuated Green, G (s)		48.0			48.0			23.0	23.0		23.0	
Effective Green, g (s)		48.5			48.5			23.5	23.5		23.5	
Actuated g/C Ratio		0.61			0.61			0.29	0.29		0.29	
Clearance Time (s)		4.5			4.5			4.5	4.5		4.5	
Lane Grp Cap (vph)		2550			2491			446	410		391	
v/s Ratio Prot												
v/s Ratio Perm		0.37			c0.41			0.06	0.01		c0.15	
v/c Ratio		0.61			0.68			0.19	0.03		0.50	
Uniform Delay, d1		9.8			10.6			21.1	20.2		23.4	
Progression Factor		1.00			1.00			1.00	1.00		1.00	
Incremental Delay, d2		1.1			1.5			0.9	0.2		4.5	
Delay (s)		10.9			12.1			22.1	20.3		27.9	
Level of Service		B			B			C	C		C	
Approach Delay (s)		10.9			12.1			21.6			27.9	
Approach LOS		B			B			C			C	

Intersection Summary			
HCM Average Control Delay	12.8	HCM Level of Service	B
HCM Volume to Capacity ratio	0.62		
Actuated Cycle Length (s)	80.0	Sum of lost time (s)	8.0
Intersection Capacity Utilization	94.1%	ICU Level of Service	F
Analysis Period (min)	15		

c Critical Lane Group

Movement	EBL	EBT	EBR	WBL	WBT	WBR	NBL	NBT	NBR	SBL	SBT	SBR
Lane Configurations												
Ideal Flow (vphpl)	1900	1900	1900	1900	1900	1900	1900	1900	1900	1900	1900	1900
Total Lost time (s)	4.0	4.0		4.0	4.0		4.0	4.0	4.0	4.0	4.0	4.0
Lane Util. Factor	1.00	0.91		1.00	0.91		1.00	0.95	1.00	1.00	0.95	1.00
Frpb, ped/bikes	1.00	0.99		1.00	0.99		1.00	1.00	0.96	1.00	1.00	0.96
Flpb, ped/bikes	1.00	1.00		1.00	1.00		1.00	1.00	1.00	1.00	1.00	1.00
Frt	1.00	0.98		1.00	0.96		1.00	1.00	0.85	1.00	1.00	0.85
Flt Protected	0.95	1.00		0.95	1.00		0.95	1.00	1.00	0.95	1.00	1.00
Satd. Flow (prot)	1770	4922		1770	4839		1770	3539	1515	1770	3539	1523
Flt Permitted	0.95	1.00		0.95	1.00		0.95	1.00	1.00	0.95	1.00	1.00
Satd. Flow (perm)	1770	4922		1770	4839		1770	3539	1515	1770	3539	1523
Volume (vph)	170	1200	171	210	1141	380	140	422	130	390	1441	250
Peak-hour factor, PHF	0.95	0.95	0.95	0.95	0.95	0.95	0.95	0.95	0.95	0.95	0.95	0.95
Adj. Flow (vph)	179	1263	180	221	1201	400	147	444	137	411	1517	263
RTOR Reduction (vph)	0	15	0	0	50	0	0	0	33	0	0	13
Lane Group Flow (vph)	179	1428	0	221	1551	0	147	444	104	411	1517	250
Confl. Peds. (#/hr)			66			23			38			26
Turn Type	Prot			Prot			Prot		pm+ov	Prot		pm+ov
Protected Phases	7	4		3	8		5	2	3	1	6	7
Permitted Phases									2			6
Actuated Green, G (s)	12.0	32.0		15.0	35.0		11.0	28.0	43.0	29.0	46.0	58.0
Effective Green, g (s)	11.0	33.0		14.0	36.0		10.0	29.0	43.0	28.0	47.0	58.0
Actuated g/C Ratio	0.09	0.28		0.12	0.30		0.08	0.24	0.36	0.23	0.39	0.48
Clearance Time (s)	3.0	5.0		3.0	5.0		3.0	5.0	3.0	3.0	5.0	3.0
Vehicle Extension (s)	2.0	2.0		2.0	2.0		2.0	2.0	2.0	2.0	2.0	2.0
Lane Grp Cap (vph)	162	1354		207	1452		148	855	593	413	1386	736
v/s Ratio Prot	0.10	0.29		c0.12	c0.32		c0.08	0.13	0.02	0.23	c0.43	0.03
v/s Ratio Perm									0.05			0.13
v/c Ratio	1.10	1.05		1.07	1.07		0.99	0.52	0.18	1.00	1.09	0.34
Uniform Delay, d1	54.5	43.5		53.0	42.0		55.0	39.5	26.4	45.9	36.5	19.2
Progression Factor	1.00	1.00		1.00	1.00		1.00	1.00	1.00	1.00	1.00	1.00
Incremental Delay, d2	101.6	40.2		81.6	44.2		71.6	2.3	0.1	42.7	54.3	0.1
Delay (s)	156.1	83.7		134.6	86.2		126.5	41.7	26.4	88.6	90.8	19.3
Level of Service	F	F		F	F		F	D	C	F	F	B
Approach Delay (s)		91.7			92.1			56.0			81.8	
Approach LOS		F			F			E			F	

Intersection Summary			
HCM Average Control Delay	84.3	HCM Level of Service	F
HCM Volume to Capacity ratio	1.09		
Actuated Cycle Length (s)	120.0	Sum of lost time (s)	16.0
Intersection Capacity Utilization	101.4%	ICU Level of Service	G
Analysis Period (min)	15		

c Critical Lane Group

Movement	EBL	EBT	EBR	WBL	WBT	WBR	NBL	NBT	NBR	SBL	SBT	SBR
Lane Configurations												
Ideal Flow (vphpl)	1900	1900	1900	1900	1900	1900	1900	1900	1900	1900	1900	1900
Total Lost time (s)		4.0			4.0		4.0	4.0		4.0	4.0	
Lane Util. Factor		1.00			1.00		1.00	0.95		1.00	0.95	
Frpb, ped/bikes		0.94			0.96		1.00	0.98		1.00	0.99	
Flpb, ped/bikes		0.98			0.96		0.98	1.00		0.94	1.00	
Frt		0.96			0.96		1.00	0.99		1.00	0.99	
Flt Protected		0.98			0.98		0.95	1.00		0.95	1.00	
Satd. Flow (prot)		1610			1626		1733	3434		1663	3472	
Flt Permitted		0.69			0.80		0.17	1.00		0.37	1.00	
Satd. Flow (perm)		1140			1319		305	3434		643	3472	
Volume (vph)	64	50	50	70	80	70	80	616	60	52	1198	72
Peak-hour factor, PHF	0.95	0.95	0.95	0.95	0.95	0.95	0.95	0.95	0.95	0.95	0.95	0.95
Adj. Flow (vph)	67	53	53	74	84	74	84	648	63	55	1261	76
RTOR Reduction (vph)	0	21	0	0	23	0	0	6	0	0	4	0
Lane Group Flow (vph)	0	152	0	0	209	0	84	705	0	55	1333	0
Confl. Peds. (#/hr)	100		100	100		100	100		100	100		100
Turn Type	Perm			Perm			Perm			Perm		
Protected Phases		4			4			2			6	
Permitted Phases	4			4			2			6		
Actuated Green, G (s)		16.2			16.2		61.8	61.8		61.8	61.8	
Effective Green, g (s)		15.7			15.7		61.3	61.3		61.3	61.3	
Actuated g/C Ratio		0.18			0.18		0.72	0.72		0.72	0.72	
Clearance Time (s)		3.5			3.5		3.5	3.5		3.5	3.5	
Vehicle Extension (s)		2.0			2.0		2.0	2.0		2.0	2.0	
Lane Grp Cap (vph)		211			244		220	2477		464	2504	
v/s Ratio Prot								0.21			c0.38	
v/s Ratio Perm		0.13			c0.16		0.28			0.09		
v/c Ratio		0.72			0.86		0.38	0.28		0.12	0.53	
Uniform Delay, d1		32.6			33.6		4.6	4.2		3.6	5.4	
Progression Factor		1.00			1.00		1.00	1.00		0.94	0.89	
Incremental Delay, d2		9.4			23.6		5.0	0.3		0.0	0.1	
Delay (s)		41.9			57.2		9.5	4.4		3.5	4.8	
Level of Service		D			E		A	A		A	A	
Approach Delay (s)		41.9			57.2			5.0			4.8	
Approach LOS		D			E			A			A	

Intersection Summary			
HCM Average Control Delay	12.0	HCM Level of Service	B
HCM Volume to Capacity ratio	0.60		
Actuated Cycle Length (s)	85.0	Sum of lost time (s)	8.0
Intersection Capacity Utilization	70.1%	ICU Level of Service	C
Analysis Period (min)	15		

c Critical Lane Group

Movement	EBL	EBT	EBR	WBL	WBT	WBR	NBL	NBT	NBR	SBL	SBT	SBR
Lane Configurations												
Ideal Flow (vphpl)	1900	1900	1900	1900	1900	1900	1900	1900	1900	1900	1900	1900
Total Lost time (s)	4.0	4.0		4.0	4.0		4.0	4.0		4.0	4.0	
Lane Util. Factor	1.00	0.95		1.00	0.95		1.00	0.95		1.00	0.95	
Frpb, ped/bikes	1.00	0.98		1.00	0.95		1.00	0.99		1.00	0.97	
Flpb, ped/bikes	1.00	1.00		1.00	1.00		1.00	1.00		0.95	1.00	
Frt	1.00	0.98		1.00	0.97		1.00	0.98		1.00	0.97	
Flt Protected	0.95	1.00		0.95	1.00		0.95	1.00		0.95	1.00	
Satd. Flow (prot)	1770	3379		1770	3253		1770	3416		1687	3338	
Flt Permitted	0.95	1.00		0.95	1.00		0.12	1.00		0.43	1.00	
Satd. Flow (perm)	1770	3379		1770	3253		219	3416		769	3338	
Volume (vph)	270	500	100	140	710	212	70	374	60	171	1017	220
Peak-hour factor, PHF	0.95	0.95	0.95	0.95	0.95	0.95	0.95	0.95	0.95	0.95	0.95	0.95
Adj. Flow (vph)	284	526	105	147	747	223	74	394	63	180	1071	232
RTOR Reduction (vph)	0	18	0	0	33	0	0	14	0	0	20	0
Lane Group Flow (vph)	284	613	0	147	937	0	74	443	0	180	1283	0
Confl. Peds. (#/hr)			100			100	100		100	100		100
Turn Type	Prot			Prot			Perm			Perm		
Protected Phases	7	4		3	8			2			6	
Permitted Phases							2			6		
Actuated Green, G (s)	16.5	28.0		11.0	22.5		32.5	32.5		32.5	32.5	
Effective Green, g (s)	17.0	27.5		11.5	22.0		34.0	34.0		34.0	34.0	
Actuated g/C Ratio	0.20	0.32		0.14	0.26		0.40	0.40		0.40	0.40	
Clearance Time (s)	4.5	3.5		4.5	3.5		5.5	5.5		5.5	5.5	
Vehicle Extension (s)	2.0	2.0		2.0	2.0		2.0	2.0		2.0	2.0	
Lane Grp Cap (vph)	354	1093		239	842		88	1366		308	1335	
v/s Ratio Prot	c0.16	0.18		0.08	c0.29			0.13			c0.38	
v/s Ratio Perm							0.34			0.23		
v/c Ratio	0.80	0.56		0.62	1.11		0.84	0.32		0.58	0.96	
Uniform Delay, d1	32.4	23.8		34.7	31.5		23.1	17.6		20.0	24.8	
Progression Factor	1.00	1.00		1.00	1.00		1.00	1.00		1.00	1.00	
Incremental Delay, d2	11.7	0.4		3.3	67.0		59.2	0.6		7.9	16.9	
Delay (s)	44.1	24.2		37.9	98.5		82.2	18.2		27.9	41.7	
Level of Service	D	C		D	F		F	B		C	D	
Approach Delay (s)		30.3			90.5			27.1			40.0	
Approach LOS		C			F			C			D	

Intersection Summary			
HCM Average Control Delay	50.1	HCM Level of Service	D
HCM Volume to Capacity ratio	0.97		
Actuated Cycle Length (s)	85.0	Sum of lost time (s)	12.0
Intersection Capacity Utilization	96.4%	ICU Level of Service	F
Analysis Period (min)	15		

c Critical Lane Group

Movement	EBL	EBR	NBL	NBT	SBT	SBR
Lane Configurations						
Ideal Flow (vphpl)	1900	1900	1900	1900	1900	1900
Total Lost time (s)	4.0		4.0	4.0	4.0	
Lane Util. Factor	1.00		1.00	0.95	0.95	
Frt	0.91		1.00	1.00	0.99	
Flt Protected	0.98		0.95	1.00	1.00	
Satd. Flow (prot)	1669		1770	3539	3501	
Flt Permitted	0.98		0.95	1.00	1.00	
Satd. Flow (perm)	1669		1770	3539	3501	
Volume (vph)	63	119	114	665	1627	122
Peak-hour factor, PHF	0.95	0.95	0.95	0.99	0.99	0.95
Adj. Flow (vph)	66	125	120	672	1643	128
RTOR Reduction (vph)	98	0	0	0	6	0
Lane Group Flow (vph)	93	0	120	672	1765	0
Turn Type			Prot			
Protected Phases	2		3	8	4	
Permitted Phases						
Actuated Green, G (s)	15.6		11.7	61.4	45.7	
Effective Green, g (s)	15.6		11.7	61.4	45.7	
Actuated g/C Ratio	0.18		0.14	0.72	0.54	
Clearance Time (s)	4.0		4.0	4.0	4.0	
Vehicle Extension (s)	3.0		3.0	3.0	3.0	
Lane Grp Cap (vph)	306		244	2556	1882	
v/s Ratio Prot	c0.06		c0.07	0.19	c0.50	
v/s Ratio Perm						
v/c Ratio	0.30		0.49	0.26	0.94	
Uniform Delay, d1	30.0		33.9	4.0	18.3	
Progression Factor	1.00		0.99	1.82	1.15	
Incremental Delay, d2	0.6		1.3	0.2	1.2	
Delay (s)	30.6		34.8	7.6	22.3	
Level of Service	C		C	A	C	
Approach Delay (s)	30.6			11.7	22.3	
Approach LOS	C			B	C	

Intersection Summary			
HCM Average Control Delay	19.8	HCM Level of Service	B
HCM Volume to Capacity ratio	0.73		
Actuated Cycle Length (s)	85.0	Sum of lost time (s)	12.0
Intersection Capacity Utilization	76.0%	ICU Level of Service	D
Analysis Period (min)	15		

c Critical Lane Group

Movement	EBL	EBT	EBR	WBL	WBT	WBR	NBL	NBT	NBR	SBL	SBT	SBR
Lane Configurations												
Ideal Flow (vphpl)	1900	1900	1900	1900	1900	1900	1900	1900	1900	1900	1900	1900
Lane Width	12	12	12	12	12	12	16	16	16	16	16	16
Total Lost time (s)	4.0	4.0		4.0	4.0		2.0	2.0		2.0	2.0	
Lane Util. Factor	1.00	0.91		1.00	0.91		1.00	1.00		1.00	1.00	
Frpb, ped/bikes	1.00	0.99		1.00	1.00		1.00	0.98		1.00	0.98	
Flpb, ped/bikes	1.00	1.00		1.00	1.00		1.00	1.00		0.98	1.00	
Frt	1.00	0.98		1.00	0.98		1.00	0.96		1.00	0.93	
Flt Protected	0.95	1.00		0.95	1.00		0.95	1.00		0.95	1.00	
Satd. Flow (prot)	1770	4926		1770	4960		2006	1992		1960	1917	
Flt Permitted	0.95	1.00		0.95	1.00		0.12	1.00		0.53	1.00	
Satd. Flow (perm)	1770	4926		1770	4960		258	1992		1101	1917	
Volume (vph)	350	1302	190	120	1070	170	200	262	100	160	288	280
Peak-hour factor, PHF	0.95	0.95	0.95	0.95	0.95	0.95	0.95	0.95	0.95	0.95	0.95	0.95
Adj. Flow (vph)	368	1371	200	126	1126	179	211	276	105	168	303	295
RTOR Reduction (vph)	0	19	0	0	21	0	0	14	0	0	35	0
Lane Group Flow (vph)	368	1552	0	126	1284	0	211	367	0	168	563	0
Confl. Peds. (#/hr)			32	32		4	12		24	24		12
Parking (#/hr)												0
Turn Type	Prot			Prot			pm+pt			Perm		
Protected Phases	7	4		3	8		5	2			6	
Permitted Phases							2			6		
Actuated Green, G (s)	20.0	36.7		9.6	26.3		43.2	43.2		30.2	30.2	
Effective Green, g (s)	20.0	36.7		9.6	26.3		43.7	43.7		30.7	30.7	
Actuated g/C Ratio	0.20	0.37		0.10	0.26		0.44	0.44		0.31	0.31	
Clearance Time (s)	4.0	4.0		4.0	4.0		4.0	2.5		2.5	2.5	
Vehicle Extension (s)	3.0	3.0		3.0	3.0		3.0	3.0		3.0	3.0	
Lane Grp Cap (vph)	354	1808		170	1304		305	871		338	589	
v/s Ratio Prot	c0.21	0.32		0.07	c0.26		c0.08	0.18			c0.29	
v/s Ratio Perm							0.23			0.15		
v/c Ratio	1.04	0.86		0.74	0.98		0.69	0.42		0.50	0.96	
Uniform Delay, d1	40.0	29.2		44.0	36.6		44.3	19.4		28.3	34.0	
Progression Factor	1.00	1.00		1.00	1.00		1.00	1.00		1.00	1.00	
Incremental Delay, d2	58.5	5.6		15.9	21.5		6.6	0.3		1.2	26.1	
Delay (s)	98.5	34.8		59.9	58.1		50.9	19.8		29.5	60.1	
Level of Service	F	C		E	E		D	B		C	E	
Approach Delay (s)		46.9			58.3			30.9			53.4	
Approach LOS		D			E			C			D	

Intersection Summary			
HCM Average Control Delay	49.4	HCM Level of Service	D
HCM Volume to Capacity ratio	0.94		
Actuated Cycle Length (s)	100.0	Sum of lost time (s)	12.0
Intersection Capacity Utilization	101.2%	ICU Level of Service	G
Analysis Period (min)	15		

c Critical Lane Group

Movement	EBL	EBT	EBR	WBL	WBT	WBR	NBL	NBT	NBR	SBL	SBT	SBR
Lane Configurations												
Ideal Flow (vphpl)	1900	1900	1900	1900	1900	1900	1900	1900	1900	1900	1900	1900
Total Lost time (s)		4.0		4.0	4.0			4.0		4.0	4.0	
Lane Util. Factor		1.00		0.95	0.95			0.95		1.00	0.95	
Frpb, ped/bikes		1.00		1.00	0.97			0.98		1.00	0.95	
Flpb, ped/bikes		0.99		1.00	1.00			1.00		1.00	1.00	
Frt		0.93		1.00	0.93			0.95		1.00	0.95	
Flt Protected		0.99		0.95	1.00			1.00		0.95	1.00	
Satd. Flow (prot)		1705		1681	1586			3275		1770	3208	
Flt Permitted		0.36		0.73	1.00			0.94		0.95	1.00	
Satd. Flow (perm)		619		1290	1586			3087		1770	3208	
Volume (vph)	10	10	20	126	120	120	10	1122	619	200	896	420
Peak-hour factor, PHF	0.95	0.95	0.95	0.95	0.95	0.95	0.95	0.95	0.95	0.95	0.95	0.95
Adj. Flow (vph)	11	11	21	133	126	126	11	1181	652	211	943	442
RTOR Reduction (vph)	0	20	0	0	39	0	0	64	0	0	46	0
Lane Group Flow (vph)	0	23	0	133	213	0	0	1780	0	211	1339	0
Confl. Peds. (#/hr)	36					36	48		16	16		48
Turn Type	Perm			Perm			Perm			Prot		
Protected Phases		7			8			2		1	6	
Permitted Phases	7			8			2					
Actuated Green, G (s)		6.5		16.7	16.7			45.7		13.1	63.3	
Effective Green, g (s)		7.0		17.2	17.2			46.2		13.6	63.8	
Actuated g/C Ratio		0.07		0.17	0.17			0.46		0.14	0.64	
Clearance Time (s)		4.5		4.5	4.5			4.5		4.5	4.5	
Vehicle Extension (s)		2.0		2.0	2.0			2.0		2.0	2.0	
Lane Grp Cap (vph)		43		222	273			1426		241	2047	
v/s Ratio Prot										c0.12	0.42	
v/s Ratio Perm		c0.04		0.10	0.13			c0.58				
v/c Ratio		0.55		0.60	0.78			1.25		0.88	0.65	
Uniform Delay, d1		45.0		38.2	39.6			26.9		42.4	11.2	
Progression Factor		1.00		1.00	1.00			0.61		1.00	1.00	
Incremental Delay, d2		7.4		2.9	12.5			112.3		27.1	1.6	
Delay (s)		52.3		41.1	52.1			128.7		69.5	12.9	
Level of Service		D		D	D			F		E	B	
Approach Delay (s)		52.3			48.3			128.7			20.4	
Approach LOS		D			D			F			C	

Intersection Summary			
HCM Average Control Delay	75.2	HCM Level of Service	E
HCM Volume to Capacity ratio	1.03		
Actuated Cycle Length (s)	100.0	Sum of lost time (s)	16.0
Intersection Capacity Utilization	118.4%	ICU Level of Service	H
Analysis Period (min)	15		

c Critical Lane Group

Movement	EBL	EBT	EBR	WBL	WBT	WBR	NBL	NBT	NBR	SBL	SBT	SBR
Lane Configurations												
Ideal Flow (vphpl)	1900	1900	1900	1900	1900	1900	1900	1900	1900	1900	1900	1900
Total Lost time (s)	4.0	4.0		4.0	4.0		4.0	4.0		4.0	4.0	
Lane Util. Factor	0.97	0.95		1.00	0.95		1.00	0.95		1.00	0.95	
Frpb, ped/bikes	1.00	0.98		1.00	0.99		1.00	0.97		1.00	0.98	
Flpb, ped/bikes	1.00	1.00		1.00	1.00		1.00	1.00		1.00	1.00	
Frt	1.00	0.98		1.00	0.94		1.00	0.96		1.00	0.99	
Flt Protected	0.95	1.00		0.95	1.00		0.95	1.00		0.95	1.00	
Satd. Flow (prot)	3433	3418		1770	3299		1770	3283		1770	3415	
Flt Permitted	0.95	1.00		0.95	1.00		0.95	1.00		0.95	1.00	
Satd. Flow (perm)	3433	3418		1770	3299		1770	3283		1770	3415	
Volume (vph)	460	930	132	160	580	350	100	961	350	300	692	60
Peak-hour factor, PHF	0.95	0.95	0.95	0.95	0.95	0.95	0.95	0.95	0.95	0.95	0.95	0.95
Adj. Flow (vph)	484	979	139	168	611	368	105	1012	368	316	728	63
RTOR Reduction (vph)	0	11	0	0	90	0	0	37	0	0	7	0
Lane Group Flow (vph)	484	1107	0	168	889	0	105	1343	0	316	784	0
Confl. Peds. (#/hr)	15		48	48		15	123		48	48		123
Turn Type	Prot			Prot			Prot			Prot		
Protected Phases	7	4		3	8		5	2		1	6	
Permitted Phases												
Actuated Green, G (s)	15.7	27.5		10.9	22.7		5.0	32.6		12.0	39.6	
Effective Green, g (s)	15.2	28.5		10.4	23.7		4.5	33.6		11.5	40.6	
Actuated g/C Ratio	0.15	0.28		0.10	0.24		0.04	0.34		0.12	0.41	
Clearance Time (s)	3.5	5.0		3.5	5.0		3.5	5.0		3.5	5.0	
Vehicle Extension (s)	2.0	2.0		2.0	2.0		2.0	2.0		2.0	2.0	
Lane Grp Cap (vph)	522	974		184	782		80	1103		204	1386	
v/s Ratio Prot	c0.14	c0.32		0.09	0.27		0.06	c0.41		c0.18	0.23	
v/s Ratio Perm												
v/c Ratio	0.93	1.14		0.91	1.14		1.31	1.22		1.55	0.57	
Uniform Delay, d1	41.9	35.8		44.4	38.1		47.8	33.2		44.2	22.9	
Progression Factor	1.00	1.00		1.00	1.00		1.00	1.00		1.20	0.76	
Incremental Delay, d2	22.3	74.0		41.7	76.9		205.3	106.3		264.8	1.3	
Delay (s)	64.2	109.8		86.0	115.0		253.1	139.5		317.8	18.8	
Level of Service	E	F		F	F		F	F		F	B	
Approach Delay (s)		96.0			110.8			147.5			104.1	
Approach LOS		F			F			F			F	

Intersection Summary			
HCM Average Control Delay	115.2	HCM Level of Service	F
HCM Volume to Capacity ratio	1.17		
Actuated Cycle Length (s)	100.0	Sum of lost time (s)	12.0
Intersection Capacity Utilization	109.7%	ICU Level of Service	H
Analysis Period (min)	15		

c Critical Lane Group

Movement	EBL	EBT	EBR	WBL	WBT	WBR	NBL	NBT	NBR	SBL	SBT	SBR
Lane Configurations												
Ideal Flow (vphpl)	1900	1900	1900	1900	1900	1900	1900	1900	1900	1900	1900	1900
Total Lost time (s)		4.0						4.0		4.0	4.0	
Lane Util. Factor		1.00						0.95		0.97	0.95	
Frt		0.86						0.94		1.00	0.98	
Flt Protected		1.00						1.00		0.95	1.00	
Satd. Flow (prot)		1611						3333		3433	3463	
Flt Permitted		1.00						0.95		0.95	1.00	
Satd. Flow (perm)		1611						3162		3433	3463	
Volume (vph)	0	0	10	0	0	0	10	559	356	1550	356	60
Peak-hour factor, PHF	0.95	0.95	0.95	0.95	0.95	0.95	0.95	0.95	0.95	0.95	0.95	0.95
Adj. Flow (vph)	0	0	11	0	0	0	11	588	375	1632	375	63
RTOR Reduction (vph)	0	11	0	0	0	0	0	18	0	0	0	0
Lane Group Flow (vph)	0	0	0	0	0	0	0	956	0	1632	438	0
Turn Type							Perm			Prot		
Protected Phases								2		1	6	
Permitted Phases							2					
Actuated Green, G (s)		0.0						13.0		29.0	50.0	
Effective Green, g (s)		0.0						13.0		29.0	50.0	
Actuated g/C Ratio		0.00						0.26		0.58	1.00	
Clearance Time (s)								4.0		4.0	2.0	
Lane Grp Cap (vph)		0						822		1991	3463	
v/s Ratio Prot										c0.48	0.13	
v/s Ratio Perm								c0.30				
v/c Ratio		0.00						1.16		0.82	0.13	
Uniform Delay, d1		25.0						18.5		8.4	0.0	
Progression Factor		1.00						0.70		1.00	1.00	
Incremental Delay, d2		0.0						85.1		3.9	0.1	
Delay (s)		25.0						98.1		12.3	0.1	
Level of Service		C						F		B	A	
Approach Delay (s)		25.0			0.0			98.1			9.7	
Approach LOS		C			A			F			A	

Intersection Summary			
HCM Average Control Delay	38.0	HCM Level of Service	D
HCM Volume to Capacity ratio	0.93		
Actuated Cycle Length (s)	50.0	Sum of lost time (s)	8.0
Intersection Capacity Utilization	84.7%	ICU Level of Service	E
Analysis Period (min)	15		

c Critical Lane Group

Movement	EBL	EBT	EBR	WBL	WBT	WBR	NBL	NBT	NBR	SBL	SBT	SBR
Lane Configurations												
Ideal Flow (vphpl)	1900	1900	1900	1900	1900	1900	1900	1900	1900	1900	1900	1900
Total Lost time (s)		4.0			4.0			4.0			4.0	
Lane Util. Factor		1.00			1.00			0.95			0.95	
Frpb, ped/bikes		0.96			0.97			0.99			0.99	
Flpb, ped/bikes		0.99			0.97			1.00			1.00	
Frt		0.97			0.96			0.98			0.99	
Flt Protected		0.99			0.99			1.00			0.99	
Satd. Flow (prot)		1694			1668			3423			3428	
Flt Permitted		0.87			0.90			0.92			0.78	
Satd. Flow (perm)		1501			1515			3157			2687	
Volume (vph)	40	70	31	70	140	90	43	735	90	60	306	30
Peak-hour factor, PHF	0.95	0.95	0.95	0.95	0.95	0.95	0.95	0.95	0.95	0.95	0.95	0.95
Adj. Flow (vph)	42	74	33	74	147	95	45	774	95	63	322	32
RTOR Reduction (vph)	0	20	0	0	31	0	0	18	0	0	13	0
Lane Group Flow (vph)	0	129	0	0	285	0	0	897	0	0	405	0
Confl. Peds. (#/hr)	100		100	100		100	100		100	100		100
Turn Type	Perm			Perm			Perm			Perm		
Protected Phases		4			8			2			6	
Permitted Phases	4			8			2			6		
Actuated Green, G (s)		17.0			17.0			25.0			25.0	
Effective Green, g (s)		17.0			17.0			25.0			25.0	
Actuated g/C Ratio		0.34			0.34			0.50			0.50	
Clearance Time (s)		4.0			4.0			4.0			4.0	
Lane Grp Cap (vph)		510			515			1579			1344	
v/s Ratio Prot												
v/s Ratio Perm		0.09			c0.19			c0.28			0.15	
v/c Ratio		0.25			0.55			0.57			0.30	
Uniform Delay, d1		11.9			13.4			8.7			7.4	
Progression Factor		1.00			1.00			1.00			1.00	
Incremental Delay, d2		1.2			4.2			1.5			0.6	
Delay (s)		13.1			17.7			10.2			7.9	
Level of Service		B			B			B			A	
Approach Delay (s)		13.1			17.7			10.2			7.9	
Approach LOS		B			B			B			A	

Intersection Summary			
HCM Average Control Delay	11.2	HCM Level of Service	B
HCM Volume to Capacity ratio	0.56		
Actuated Cycle Length (s)	50.0	Sum of lost time (s)	8.0
Intersection Capacity Utilization	78.6%	ICU Level of Service	D
Analysis Period (min)	15		
c Critical Lane Group			

Movement	EBL	EBT	EBR	WBL	WBT	WBR	NBL	NBT	NBR	SBL	SBT	SBR
Lane Configurations												
Ideal Flow (vphpl)	1900	1900	1900	1900	1900	1900	1900	1900	1900	1900	1900	1900
Total Lost time (s)		4.0			4.0			4.0			4.0	
Lane Util. Factor		1.00			1.00			0.95			0.91	
Frpb, ped/bikes		0.96			0.96			0.99			0.98	
Flpb, ped/bikes		0.97			0.98			1.00			1.00	
Frt		0.96			0.96			0.99			0.99	
Flt Protected		0.98			0.99			1.00			1.00	
Satd. Flow (prot)		1623			1667			3452			4909	
Flt Permitted		0.74			0.88			0.77			0.79	
Satd. Flow (perm)		1223			1474			2650			3894	
Volume (vph)	80	70	70	33	80	50	90	1683	85	40	1091	90
Peak-hour factor, PHF	0.95	0.95	0.95	0.95	0.95	0.95	0.95	0.95	0.95	0.95	0.95	0.95
Adj. Flow (vph)	84	74	74	35	84	53	95	1772	89	42	1148	95
RTOR Reduction (vph)	0	18	0	0	2	0	0	2	0	0	7	0
Lane Group Flow (vph)	0	214	0	0	170	0	0	1954	0	0	1278	0
Confl. Peds. (#/hr)	100		100	100		100	100		100	100		100
Turn Type	Perm			Perm			Perm			Perm		
Protected Phases		4			4			2			6	
Permitted Phases	4			4			2			6		
Actuated Green, G (s)		15.3			15.3			55.7			55.7	
Effective Green, g (s)		15.8			15.8			56.2			56.2	
Actuated g/C Ratio		0.20			0.20			0.70			0.70	
Clearance Time (s)		4.5			4.5			4.5			4.5	
Vehicle Extension (s)		2.0			2.0			2.0			2.0	
Lane Grp Cap (vph)		242			291			1862			2736	
v/s Ratio Prot												
v/s Ratio Perm		c0.17			0.12			c0.74			0.33	
v/c Ratio		0.88			0.58			1.05			0.47	
Uniform Delay, d1		31.2			29.1			11.9			5.3	
Progression Factor		1.00			1.00			1.00			1.00	
Incremental Delay, d2		28.5			1.9			35.1			0.6	
Delay (s)		59.7			31.0			47.0			5.8	
Level of Service		E			C			D			A	
Approach Delay (s)		59.7			31.0			47.0			5.8	
Approach LOS		E			C			D			A	

Intersection Summary			
HCM Average Control Delay	32.6	HCM Level of Service	C
HCM Volume to Capacity ratio	1.01		
Actuated Cycle Length (s)	80.0	Sum of lost time (s)	8.0
Intersection Capacity Utilization	114.2%	ICU Level of Service	H
Analysis Period (min)	15		
c Critical Lane Group			

Movement	EBL	EBT	EBR	WBL	WBT	WBR	NBL	NBT	NBR	SBL	SBT	SBR
Lane Configurations												
Ideal Flow (vphpl)	1900	1900	1900	1900	1900	1900	1900	1900	1900	1900	1900	1900
Total Lost time (s)	4.0	4.0		4.0	4.0		4.0	4.0		4.0	4.0	
Lane Util. Factor	1.00	0.95		1.00	0.95		1.00	1.00		1.00	1.00	
Frpb, ped/bikes	1.00	1.00		1.00	1.00		1.00	1.00		1.00	1.00	
Flpb, ped/bikes	1.00	1.00		1.00	1.00		0.98	1.00		1.00	1.00	
Frt	1.00	0.98		1.00	0.98		1.00	0.98		1.00	0.98	
Flt Protected	0.95	1.00		0.95	1.00		0.95	1.00		0.95	1.00	
Satd. Flow (prot)	1765	3464		1768	3454		1741	1830		1766	1825	
Flt Permitted	0.12	1.00		0.12	1.00		0.52	1.00		0.22	1.00	
Satd. Flow (perm)	232	3464		233	3454		960	1830		402	1825	
Volume (vph)	90	1115	160	86	902	135	180	561	65	105	250	30
Peak-hour factor, PHF	0.95	0.95	0.95	0.95	0.95	0.95	0.95	0.95	0.95	0.95	0.95	0.95
Adj. Flow (vph)	95	1174	168	91	949	142	189	591	68	111	263	32
RTOR Reduction (vph)	0	14	0	0	15	0	0	5	0	0	6	0
Lane Group Flow (vph)	95	1328	0	91	1076	0	189	654	0	111	290	0
Confl. Peds. (#/hr)	12		12	12		12	42		12	12		42
Turn Type	Perm			Perm			Perm			Perm		
Protected Phases		4			8			2			6	
Permitted Phases	4			8			2			6		
Actuated Green, G (s)	33.0	33.0		33.0	33.0		40.5	40.5		40.5	40.5	
Effective Green, g (s)	32.0	32.0		32.0	32.0		40.0	40.0		40.0	40.0	
Actuated g/C Ratio	0.40	0.40		0.40	0.40		0.50	0.50		0.50	0.50	
Clearance Time (s)	3.0	3.0		3.0	3.0		3.5	3.5		3.5	3.5	
Lane Grp Cap (vph)	93	1386		93	1382		480	915		201	913	
v/s Ratio Prot		0.38			0.31			c0.36			0.16	
v/s Ratio Perm	c0.41			0.39			0.20			0.28		
v/c Ratio	1.02	0.96		0.98	0.78		0.39	0.71		0.55	0.32	
Uniform Delay, d1	24.0	23.4		23.7	20.9		12.5	15.6		13.8	11.9	
Progression Factor	1.00	1.00		1.72	1.79		1.64	1.63		1.00	1.00	
Incremental Delay, d2	99.3	16.1		52.5	1.7		0.2	0.4		10.5	0.9	
Delay (s)	123.3	39.4		93.1	39.1		20.6	25.8		24.3	12.8	
Level of Service	F	D		F	D		C	C		C	B	
Approach Delay (s)		45.0			43.3			24.7			15.9	
Approach LOS		D			D			C			B	

Intersection Summary			
HCM Average Control Delay	37.0	HCM Level of Service	D
HCM Volume to Capacity ratio	0.85		
Actuated Cycle Length (s)	80.0	Sum of lost time (s)	8.0
Intersection Capacity Utilization	96.6%	ICU Level of Service	F
Analysis Period (min)	15		
c Critical Lane Group			

Movement	EBL	EBT	EBR	WBL	WBT	WBR	NBL	NBT	NBR	SBL	SBT	SBR
Lane Configurations												
Ideal Flow (vphpl)	1900	1900	1900	1900	1900	1900	1900	1900	1900	1900	1900	1900
Total Lost time (s)	4.0	4.0		4.0	4.0			4.0			4.0	
Lane Util. Factor	1.00	0.95		1.00	0.95			0.95			0.95	
Frpb, ped/bikes	1.00	0.99		1.00	1.00			1.00			1.00	
Flpb, ped/bikes	1.00	1.00		1.00	1.00			1.00			1.00	
Frt	1.00	0.99		1.00	0.99			0.98			0.97	
Flt Protected	0.95	1.00		0.95	1.00			0.99			0.99	
Satd. Flow (prot)	1770	3458		1770	3498			3435			3394	
Flt Permitted	0.16	1.00		0.16	1.00			0.84			0.87	
Satd. Flow (perm)	298	3458		298	3498			2914			2962	
Volume (vph)	60	1154	120	74	1033	68	90	333	57	33	160	50
Peak-hour factor, PHF	0.99	0.99	0.99	0.99	0.99	0.99	0.99	0.99	0.99	0.99	0.99	0.99
Adj. Flow (vph)	61	1166	121	75	1043	69	91	336	58	33	162	51
RTOR Reduction (vph)	0	10	0	0	6	0	0	1	0	0	4	0
Lane Group Flow (vph)	61	1277	0	75	1106	0	0	484	0	0	242	0
Confl. Peds. (#/hr)	24		78	78		24	8		6	6		8
Turn Type	Perm			Perm			Perm			Perm		
Protected Phases		4			8			2			6	
Permitted Phases	4			8			2			6		
Actuated Green, G (s)	24.0	24.0		24.0	24.0			46.0			46.0	
Effective Green, g (s)	25.0	25.0		25.0	25.0			47.0			47.0	
Actuated g/C Ratio	0.31	0.31		0.31	0.31			0.59			0.59	
Clearance Time (s)	5.0	5.0		5.0	5.0			5.0			5.0	
Lane Grp Cap (vph)	93	1081		93	1093			1712			1740	
v/s Ratio Prot		c0.37			0.32							
v/s Ratio Perm	0.20			0.25				c0.17			0.08	
v/c Ratio	0.66	1.18		0.81	1.01			0.28			0.14	
Uniform Delay, d1	23.8	27.5		25.3	27.5			8.2			7.4	
Progression Factor	0.64	0.57		0.79	0.82			1.06			1.00	
Incremental Delay, d2	13.3	85.8		31.3	22.7			0.2			0.2	
Delay (s)	28.5	101.5		51.3	45.3			8.8			7.6	
Level of Service	C	F		D	D			A			A	
Approach Delay (s)		98.2			45.7			8.8			7.6	
Approach LOS		F			D			A			A	

Intersection Summary			
HCM Average Control Delay	59.0	HCM Level of Service	E
HCM Volume to Capacity ratio	0.59		
Actuated Cycle Length (s)	80.0	Sum of lost time (s)	8.0
Intersection Capacity Utilization	80.7%	ICU Level of Service	D
Analysis Period (min)	15		
c Critical Lane Group			

Movement	EBL	EBT	EBR	WBL	WBT	WBR	NBL	NBT	NBR	SBL	SBT	SBR
Lane Configurations												
Ideal Flow (vphpl)	1900	1900	1900	1900	1900	1900	1900	1900	1900	1900	1900	1900
Total Lost time (s)	4.0	4.0		4.0	4.0			4.0			4.0	
Lane Util. Factor	1.00	0.95		1.00	0.95			0.95			0.95	
Frpb, ped/bikes	1.00	1.00		1.00	1.00			1.00			1.00	
Flpb, ped/bikes	1.00	1.00		1.00	1.00			1.00			1.00	
Frt	1.00	0.99		1.00	0.98			0.98			0.98	
Flt Protected	0.95	1.00		0.95	1.00			0.99			0.99	
Satd. Flow (prot)	1768	3492		1764	3447			3419			3419	
Flt Permitted	0.11	1.00		0.11	1.00			0.86			0.67	
Satd. Flow (perm)	213	3492		212	3447			2949			2307	
Volume (vph)	90	1110	84	119	1080	185	75	543	121	91	256	60
Peak-hour factor, PHF	0.95	0.95	0.95	0.95	0.95	0.95	0.95	0.95	0.95	0.95	0.95	0.95
Adj. Flow (vph)	95	1168	88	125	1137	195	79	572	127	96	269	63
RTOR Reduction (vph)	0	7	0	0	17	0	0	12	0	0	17	0
Lane Group Flow (vph)	95	1249	0	125	1315	0	0	766	0	0	411	0
Confl. Peds. (#/hr)	8		39	39		8			25	25		
Turn Type	Perm			Perm			Perm			Perm		
Protected Phases		4			8			2			6	
Permitted Phases	4			8			2			6		
Actuated Green, G (s)	35.5	35.5		35.5	35.5			38.0			38.0	
Effective Green, g (s)	35.0	35.0		35.0	35.0			37.0			37.0	
Actuated g/C Ratio	0.44	0.44		0.44	0.44			0.46			0.46	
Clearance Time (s)	3.5	3.5		3.5	3.5			3.0			3.0	
Lane Grp Cap (vph)	93	1528		93	1508			1364			1067	
v/s Ratio Prot		0.36			0.38							
v/s Ratio Perm	0.45			c0.59				c0.26			0.18	
v/c Ratio	1.02	0.82		1.34	0.87			0.56			0.39	
Uniform Delay, d1	22.5	19.7		22.5	20.5			15.6			14.1	
Progression Factor	1.04	1.04		1.13	1.14			1.32			1.00	
Incremental Delay, d2	33.5	0.5		203.8	6.2			1.4			1.1	
Delay (s)	56.9	21.0		229.2	29.6			22.0			15.1	
Level of Service	E	C		F	C			C			B	
Approach Delay (s)		23.5			46.7			22.0			15.1	
Approach LOS		C			D			C			B	

Intersection Summary			
HCM Average Control Delay	30.8	HCM Level of Service	C
HCM Volume to Capacity ratio	0.94		
Actuated Cycle Length (s)	80.0	Sum of lost time (s)	8.0
Intersection Capacity Utilization	95.8%	ICU Level of Service	F
Analysis Period (min)	15		
c Critical Lane Group			

Movement	EBT	EBR	WBL	WBT	NBL	NBR
Lane Configurations						
Ideal Flow (vphpl)	1900	1900	1900	1900	1900	1900
Total Lost time (s)	4.0		4.0	4.0	4.0	4.0
Lane Util. Factor	0.95		1.00	0.95	1.00	1.00
Frpb, ped/bikes	0.96		1.00	1.00	1.00	1.00
Flpb, ped/bikes	1.00		1.00	1.00	1.00	1.00
Frt	0.99		1.00	1.00	1.00	0.85
Flt Protected	1.00		0.95	1.00	0.95	1.00
Satd. Flow (prot)	3351		1770	3539	1770	1583
Flt Permitted	1.00		0.95	1.00	0.95	1.00
Satd. Flow (perm)	3351		1770	3539	1770	1583
Volume (vph)	1226	108	55	1223	171	66
Peak-hour factor, PHF	0.97	0.97	0.97	0.97	0.97	0.97
Adj. Flow (vph)	1264	111	57	1261	176	68
RTOR Reduction (vph)	0	0	0	0	0	0
Lane Group Flow (vph)	1375	0	57	1261	176	68
Confl. Peds. (#/hr)		213	348			
Turn Type			Prot			Perm
Protected Phases	4		3	8	2	
Permitted Phases						2
Actuated Green, G (s)	41.0		5.0	50.0	22.0	22.0
Effective Green, g (s)	41.0		5.0	50.0	22.0	22.0
Actuated g/C Ratio	0.51		0.06	0.62	0.28	0.28
Clearance Time (s)	4.0		4.0	4.0	4.0	4.0
Lane Grp Cap (vph)	1717		111	2212	487	435
v/s Ratio Prot	c0.41		0.03	c0.36	c0.10	
v/s Ratio Perm						0.04
v/c Ratio	0.80		0.51	0.57	0.36	0.16
Uniform Delay, d1	16.1		36.3	8.7	23.3	22.0
Progression Factor	0.87		0.85	0.98	1.51	1.53
Incremental Delay, d2	2.5		4.4	0.3	1.9	0.7
Delay (s)	16.5		35.3	8.8	37.0	34.3
Level of Service	B		D	A	D	C
Approach Delay (s)	16.5			10.0	36.3	
Approach LOS	B			A	D	

Intersection Summary			
HCM Average Control Delay	15.2	HCM Level of Service	B
HCM Volume to Capacity ratio	0.65		
Actuated Cycle Length (s)	80.0	Sum of lost time (s)	12.0
Intersection Capacity Utilization	60.8%	ICU Level of Service	B
Analysis Period (min)	15		
c Critical Lane Group			

Movement	EBL	EBT	EBR	WBL	WBT	WBR	NBL	NBT	NBR	SBL	SBT	SBR
Lane Configurations												
Ideal Flow (vphpl)	1900	1900	1900	1900	1900	1900	1900	1900	1900	1900	1900	1900
Total Lost time (s)	4.0	4.0		4.0	4.0		4.0	4.0		4.0	4.0	
Lane Util. Factor	1.00	0.95		1.00	0.95		1.00	0.95		1.00	0.95	
Frpb, ped/bikes	1.00	0.99		1.00	0.97		1.00	0.99		1.00	0.96	
Flpb, ped/bikes	0.94	1.00		1.00	1.00		1.00	1.00		1.00	1.00	
Frt	1.00	0.98		1.00	0.98		1.00	0.99		1.00	0.96	
Flt Protected	0.95	1.00		0.95	1.00		0.95	1.00		0.95	1.00	
Satd. Flow (prot)	1671	3443		1770	3336		1770	3473		1770	3276	
Flt Permitted	0.25	1.00		0.15	1.00		0.95	1.00		0.95	1.00	
Satd. Flow (perm)	441	3443		287	3336		1770	3473		1770	3276	
Volume (vph)	249	934	109	75	557	110	466	1470	124	130	689	255
Peak-hour factor, PHF	0.98	0.98	0.98	0.98	0.98	0.98	0.98	0.98	0.98	0.98	0.98	0.98
Adj. Flow (vph)	254	953	111	77	568	112	476	1500	127	133	703	260
RTOR Reduction (vph)	0	11	0	0	20	0	0	7	0	0	26	0
Lane Group Flow (vph)	254	1053	0	77	660	0	476	1620	0	133	937	0
Confl. Peds. (#/hr)	94		86	86		94			40			111
Turn Type	Perm			Perm			Prot			Prot		
Protected Phases		4			8		5	2		1	6	
Permitted Phases	4			8								
Actuated Green, G (s)	25.5	25.5		25.5	25.5		13.5	32.2		8.8	27.5	
Effective Green, g (s)	26.0	26.0		26.0	26.0		14.0	32.7		9.3	28.0	
Actuated g/C Ratio	0.32	0.32		0.32	0.32		0.18	0.41		0.12	0.35	
Clearance Time (s)	4.5	4.5		4.5	4.5		4.5	4.5		4.5	4.5	
Vehicle Extension (s)	2.0	2.0		2.0	2.0		2.0	2.0		2.0	2.0	
Lane Grp Cap (vph)	143	1119		93	1084		310	1420		206	1147	
v/s Ratio Prot		0.31			0.20		c0.27	c0.47		0.08	0.29	
v/s Ratio Perm	c0.58			0.27								
v/c Ratio	1.78	0.94		0.83	0.61		1.54	1.14		0.65	0.82	
Uniform Delay, d1	27.0	26.3		24.9	22.7		33.0	23.6		33.8	23.7	
Progression Factor	0.85	0.84		1.00	1.00		0.94	0.97		1.00	1.00	
Incremental Delay, d2	366.3	10.2		41.1	0.7		248.4	67.8		5.1	6.5	
Delay (s)	389.1	32.3		66.1	23.4		279.6	90.8		38.9	30.2	
Level of Service	F	C		E	C		F	F		D	C	
Approach Delay (s)		101.0			27.7			133.5			31.2	
Approach LOS		F			C			F			C	

Intersection Summary			
HCM Average Control Delay	89.0	HCM Level of Service	F
HCM Volume to Capacity ratio	1.42		
Actuated Cycle Length (s)	80.0	Sum of lost time (s)	8.0
Intersection Capacity Utilization	102.1%	ICU Level of Service	G
Analysis Period (min)	15		

c Critical Lane Group

Movement	WBL	WBR	NBT	NBR	SBL	SBT
Lane Configurations						
Sign Control	Stop		Free			Free
Grade	0%		0%			0%
Volume (veh/h)	30	41	1941	40	20	998
Peak Hour Factor	0.95	0.95	0.95	0.95	0.95	0.95
Hourly flow rate (vph)	32	43	2043	42	21	1051
Pedestrians	52		52			45
Lane Width (ft)	12.0		12.0			12.0
Walking Speed (ft/s)	4.0		4.0			4.0
Percent Blockage	4		4			4
Right turn flare (veh)						
Median type	None					
Median storage veh)						
Upstream signal (ft)			230			471
pX, platoon unblocked	0.73	0.66			0.66	
vC, conflicting volume	2736	1140			2137	
vC1, stage 1 conf vol						
vC2, stage 2 conf vol						
vCu, unblocked vol	2424	698			2208	
tC, single (s)	6.8	6.9			4.1	
tC, 2 stage (s)						
tF (s)	3.5	3.3			2.2	
p0 queue free %	0	81			86	
cM capacity (veh/h)	15	233			148	

Direction, Lane #	WB 1	NB 1	NB 2	SB 1	SB 2	SB 3
Volume Total	75	1362	723	21	525	525
Volume Left	32	0	0	21	0	0
Volume Right	43	0	42	0	0	0
cSH	33	1700	1700	148	1700	1700
Volume to Capacity	2.24	0.80	0.43	0.14	0.31	0.31
Queue Length 95th (ft)	212	0	0	12	0	0
Control Delay (s)	824.5	0.0	0.0	33.3	0.0	0.0
Lane LOS	F			D		
Approach Delay (s)	824.5	0.0		0.7		
Approach LOS	F					

Intersection Summary			
Average Delay	19.3		
Intersection Capacity Utilization	73.4%	ICU Level of Service	D
Analysis Period (min)	15		

Movement	EBL	EBT	EBR	WBL	WBT	WBR	NBL	NBT	NBR	SBL	SBT	SBR
Lane Configurations												
Ideal Flow (vphpl)	1900	1900	1900	1900	1900	1900	1900	1900	1900	1900	1900	1900
Total Lost time (s)		4.0		4.0	4.0			4.0		4.0	4.0	
Lane Util. Factor		0.91		1.00	0.95			1.00		1.00	1.00	
Frpb, ped/bikes		1.00		1.00	1.00			1.00		1.00	0.99	
Flpb, ped/bikes		1.00		1.00	1.00			1.00		1.00	1.00	
Frt		0.99		1.00	0.98			0.98		1.00	0.98	
Flt Protected		0.99		0.95	1.00			0.99		0.95	1.00	
Satd. Flow (prot)		5013		1768	3452			1793		1770	1806	
Flt Permitted		0.65		0.22	1.00			0.27		0.24	1.00	
Satd. Flow (perm)		3269		417	3452			491		442	1806	
Volume (vph)	160	858	40	93	1347	221	190	525	120	80	406	70
Peak-hour factor, PHF	0.98	0.98	0.98	0.98	0.98	0.98	0.98	0.98	0.98	0.98	0.98	0.98
Adj. Flow (vph)	163	876	41	95	1374	226	194	536	122	82	414	71
RTOR Reduction (vph)	0	5	0	0	17	0	0	8	0	0	8	0
Lane Group Flow (vph)	0	1075	0	95	1584	0	0	844	0	82	477	0
Confl. Peds. (#/hr)	24		4	4		24	48		12	12		48
Turn Type	Perm			Perm			Perm			Perm		
Protected Phases		4			8			2			6	
Permitted Phases	4			8			2			6		
Actuated Green, G (s)		46.0		46.0	46.0			24.0		24.0	24.0	
Effective Green, g (s)		47.0		47.0	47.0			25.0		25.0	25.0	
Actuated g/C Ratio		0.59		0.59	0.59			0.31		0.31	0.31	
Clearance Time (s)		5.0		5.0	5.0			5.0		5.0	5.0	
Lane Grp Cap (vph)		1921		245	2028			153		138	564	
v/s Ratio Prot					c0.46						0.26	
v/s Ratio Perm		0.33		0.23				c1.72		0.19		
v/c Ratio		1.66dl		0.39	0.78			5.52		0.59	0.85	
Uniform Delay, d1		10.1		8.8	12.6			27.5		23.2	25.7	
Progression Factor		1.00		1.57	1.63			1.00		0.77	0.79	
Incremental Delay, d2		1.2		3.5	2.3			2047.9		14.4	12.1	
Delay (s)		11.3		17.3	22.8			2075.4		32.2	32.6	
Level of Service		B		B	C			F		C	C	
Approach Delay (s)		11.3			22.5			2075.4			32.5	
Approach LOS		B			C			F			C	

Intersection Summary			
HCM Average Control Delay	438.0	HCM Level of Service	F
HCM Volume to Capacity ratio	2.42		
Actuated Cycle Length (s)	80.0	Sum of lost time (s)	8.0
Intersection Capacity Utilization	168.1%	ICU Level of Service	H
Analysis Period (min)	15		

dl Defacto Left Lane. Recode with 1 though lane as a left lane.
c Critical Lane Group

Movement	EBL	EBT	EBR	WBL	WBT	WBR	NBL	NBT	NBR	SBL	SBT	SBR
Lane Configurations												
Ideal Flow (vphpl)	1900	1900	1900	1900	1900	1900	1900	1900	1900	1900	1900	1900
Total Lost time (s)		4.0			4.0		4.0	4.0		4.0	4.0	
Lane Util. Factor		0.91			0.91		1.00	1.00		1.00	1.00	
Frpb, ped/bikes		1.00			1.00		1.00	1.00		1.00	1.00	
Flpb, ped/bikes		1.00			1.00		1.00	1.00		1.00	1.00	
Frt		0.99			0.99		1.00	0.96		1.00	0.98	
Flt Protected		1.00			1.00		0.95	1.00		0.95	1.00	
Satd. Flow (prot)		4998			5014		1770	1788		1766	1822	
Flt Permitted		0.76			0.78		0.37	1.00		0.20	1.00	
Satd. Flow (perm)		3795			3944		698	1788		363	1822	
Volume (vph)	60	798	70	103	1380	113	140	337	106	90	234	40
Peak-hour factor, PHF	0.95	0.95	0.95	0.95	0.95	0.95	0.95	0.95	0.95	0.95	0.95	0.95
Adj. Flow (vph)	63	840	74	108	1453	119	147	355	112	95	246	42
RTOR Reduction (vph)	0	12	0	0	11	0	0	14	0	0	7	0
Lane Group Flow (vph)	0	965	0	0	1669	0	147	453	0	95	281	0
Confl. Peds. (#/hr)			12	12					6	6		
Turn Type	Perm			Perm			Perm			Perm		
Protected Phases		4			8			2			6	
Permitted Phases	4			8			2			6		
Actuated Green, G (s)		51.5			51.5		20.5	20.5		20.5	20.5	
Effective Green, g (s)		51.5			51.5		20.5	20.5		20.5	20.5	
Actuated g/C Ratio		0.64			0.64		0.26	0.26		0.26	0.26	
Clearance Time (s)		4.0			4.0		4.0	4.0		4.0	4.0	
Lane Grp Cap (vph)		2443			2539		179	458		93	467	
v/s Ratio Prot								0.25			0.15	
v/s Ratio Perm		0.25			c0.42		0.21			c0.26		
v/c Ratio		0.40			0.66		0.82	0.99		1.02	0.60	
Uniform Delay, d1		6.8			8.8		28.0	29.6		29.8	26.2	
Progression Factor		1.17			1.71		1.00	1.00		1.19	1.22	
Incremental Delay, d2		0.0			1.0		32.8	39.4		89.9	4.6	
Delay (s)		8.0			16.0		60.8	69.0		125.4	36.5	
Level of Service		A			B		E	E		F	D	
Approach Delay (s)		8.0			16.0			67.1			58.6	
Approach LOS		A			B			E			E	

Intersection Summary			
HCM Average Control Delay	26.9	HCM Level of Service	C
HCM Volume to Capacity ratio	0.76		
Actuated Cycle Length (s)	80.0	Sum of lost time (s)	8.0
Intersection Capacity Utilization	100.6%	ICU Level of Service	G
Analysis Period (min)	15		

c Critical Lane Group

Movement	EBL	EBT	EBR	WBL	WBT	WBR	NBL	NBT	NBR	SBL	SBT	SBR
Lane Configurations												
Ideal Flow (vphpl)	1900	1900	1900	1900	1900	1900	1900	1900	1900	1900	1900	1900
Total Lost time (s)		4.0			4.0			4.0			4.0	
Lane Util. Factor		0.91			0.91			0.95			0.95	
Frpb, ped/bikes		1.00			1.00			1.00			0.99	
Flpb, ped/bikes		1.00			1.00			1.00			1.00	
Frt		0.99			0.98			0.98			0.97	
Flt Protected		1.00			1.00			0.99			0.99	
Satd. Flow (prot)		5021			4956			3433			3359	
Flt Permitted		0.73			0.82			0.73			0.57	
Satd. Flow (perm)		3663			4055			2519			1943	
Volume (vph)	73	891	50	81	1415	241	80	426	75	140	227	92
Peak-hour factor, PHF	0.99	0.99	0.99	0.99	0.99	0.99	0.99	0.99	0.99	0.99	0.99	0.99
Adj. Flow (vph)	74	900	51	82	1429	243	81	430	76	141	229	93
RTOR Reduction (vph)	0	7	0	0	27	0	0	15	0	0	28	0
Lane Group Flow (vph)	0	1018	0	0	1727	0	0	572	0	0	435	0
Confl. Peds. (#/hr)	9		17	17		9	12		10	10		12
Turn Type	Perm			Perm			Perm			Perm		
Protected Phases		4			8			2			6	
Permitted Phases	4			8			2			6		
Actuated Green, G (s)		50.0			50.0			19.0			19.0	
Effective Green, g (s)		51.5			51.5			20.5			20.5	
Actuated g/C Ratio		0.64			0.64			0.26			0.26	
Clearance Time (s)		5.5			5.5			5.5			5.5	
Lane Grp Cap (vph)		2358			2610			645			498	
v/s Ratio Prot												
v/s Ratio Perm		0.28			c0.43			c0.23			0.22	
v/c Ratio		0.43			0.66			0.89			0.95dl	
Uniform Delay, d1		7.0			8.8			28.6			28.5	
Progression Factor		1.60			2.08			1.00			1.17	
Incremental Delay, d2		0.5			1.0			16.5			18.8	
Delay (s)		11.7			19.4			45.2			52.2	
Level of Service		B			B			D			D	
Approach Delay (s)		11.7			19.4			45.2			52.2	
Approach LOS		B			B			D			D	

Intersection Summary			
HCM Average Control Delay	25.3	HCM Level of Service	C
HCM Volume to Capacity ratio	0.73		
Actuated Cycle Length (s)	80.0	Sum of lost time (s)	8.0
Intersection Capacity Utilization	126.8%	ICU Level of Service	H
Analysis Period (min)	15		

dl Defacto Left Lane. Recode with 1 though lane as a left lane.
c Critical Lane Group

Movement	EBL	EBT	EBR	WBL	WBT	WBR	NBL	NBT	NBR	SBL	SBT	SBR
Lane Configurations												
Ideal Flow (vphpl)	1900	1900	1900	1900	1900	1900	1900	1900	1900	1900	1900	1900
Total Lost time (s)		4.0			4.0						4.0	
Lane Util. Factor		0.91			0.91						1.00	
Frpb, ped/bikes		1.00			1.00						0.96	
Flpb, ped/bikes		1.00			1.00						1.00	
Frt		1.00			0.99						0.92	
Flt Protected		1.00			1.00						0.98	
Satd. Flow (prot)		5065			5033						1608	
Flt Permitted		0.68			1.00						0.87	
Satd. Flow (perm)		3456			5033						1428	
Volume (vph)	90	1045	0	0	1535	60	0	0	0	138	0	189
Peak-hour factor, PHF	0.96	0.96	0.95	0.95	0.96	0.96	0.95	0.95	0.95	0.96	0.95	0.96
Adj. Flow (vph)	94	1089	0	0	1599	62	0	0	0	144	0	197
RTOR Reduction (vph)	0	0	0	0	0	0	0	0	0	0	0	0
Lane Group Flow (vph)	0	1183	0	0	1661	0	0	0	0	0	341	0
Confl. Peds. (#/hr)						79						79
Turn Type	Perm			Perm			Perm			Perm		
Protected Phases		4			8			2			6	
Permitted Phases	4			8			2			6		
Actuated Green, G (s)		38.0			38.0						34.0	
Effective Green, g (s)		38.0			38.0						34.0	
Actuated g/C Ratio		0.48			0.48						0.42	
Clearance Time (s)		4.0			4.0						4.0	
Lane Grp Cap (vph)		1642			2391						607	
v/s Ratio Prot					0.33							
v/s Ratio Perm		c0.34									c0.24	
v/c Ratio		1.01dl			0.69						0.56	
Uniform Delay, d1		16.8			16.5						17.4	
Progression Factor		0.99			1.00						0.92	
Incremental Delay, d2		2.5			1.7						3.6	
Delay (s)		19.1			18.1						19.6	
Level of Service		B			B						B	
Approach Delay (s)		19.1			18.1			0.0			19.6	
Approach LOS		B			B			A			B	

Intersection Summary			
HCM Average Control Delay	18.7	HCM Level of Service	B
HCM Volume to Capacity ratio	0.65		
Actuated Cycle Length (s)	80.0	Sum of lost time (s)	8.0
Intersection Capacity Utilization	87.4%	ICU Level of Service	E
Analysis Period (min)	15		

dl Defacto Left Lane. Recode with 1 though lane as a left lane.
c Critical Lane Group

Movement	EBL	EBT	EBR	WBL	WBT	WBR	NBL	NBT	NBR	SBL	SBT	SBR
Lane Configurations												
Ideal Flow (vphpl)	1900	1900	1900	1900	1900	1900	1900	1900	1900	1900	1900	1900
Total Lost time (s)		4.0			4.0		4.0	4.0		4.0	4.0	
Lane Util. Factor		0.91			0.91		1.00	0.95		1.00	0.95	
Frpb, ped/bikes		1.00			0.99		1.00	0.99		1.00	0.99	
Flpb, ped/bikes		1.00			1.00		0.99	1.00		1.00	1.00	
Frt		0.99			0.96		1.00	0.99		1.00	0.98	
Flt Protected		0.98			1.00		0.95	1.00		0.95	1.00	
Satd. Flow (prot)		4915			4808		1750	3459		1770	3429	
Flt Permitted		0.68			0.71		0.20	1.00		0.11	1.00	
Satd. Flow (perm)		3379			3422		369	3459		213	3429	
Volume (vph)	387	695	111	110	1174	466	280	1206	110	206	626	111
Peak-hour factor, PHF	0.95	0.95	0.95	0.95	0.95	0.95	0.95	0.95	0.95	0.95	0.95	0.95
Adj. Flow (vph)	407	732	117	116	1236	491	295	1269	116	217	659	117
RTOR Reduction (vph)	0	7	0	0	1	0	0	7	0	0	14	0
Lane Group Flow (vph)	0	1249	0	0	1842	0	295	1378	0	217	762	0
Confl. Peds. (#/hr)	26		19			26	39		92	92		39
Turn Type	Perm			pm+pt			Perm			Perm		
Protected Phases		4		3	8			2			6	
Permitted Phases	4			8			2			6		
Actuated Green, G (s)		56.6			56.6		34.0	34.0		34.0	34.0	
Effective Green, g (s)		58.1			58.1		35.0	35.0		35.0	35.0	
Actuated g/C Ratio		0.57			0.57		0.35	0.35		0.35	0.35	
Clearance Time (s)		5.5			5.5		5.0	5.0		5.0	5.0	
Vehicle Extension (s)		2.0			2.0		2.0	2.0		2.0	2.0	
Lane Grp Cap (vph)		1942			1967		128	1197		74	1187	
v/s Ratio Prot								0.40			0.22	
v/s Ratio Perm		0.37			c0.54		0.80			c1.02		
v/c Ratio		2.54dl			0.94		2.30	1.15		2.93	0.64	
Uniform Delay, d1		14.5			19.8		33.0	33.0		33.0	27.8	
Progression Factor		1.00			1.00		1.00	1.00		1.00	1.00	
Incremental Delay, d2		0.6			9.0		611.0	78.2		905.1	2.7	
Delay (s)		15.1			28.8		644.0	111.2		938.1	30.5	
Level of Service		B			C		F	F		F	C	
Approach Delay (s)		15.1			28.8			204.8			228.8	
Approach LOS		B			C			F			F	

Intersection Summary			
HCM Average Control Delay	111.4	HCM Level of Service	F
HCM Volume to Capacity ratio	1.69		
Actuated Cycle Length (s)	101.1	Sum of lost time (s)	8.0
Intersection Capacity Utilization	122.0%	ICU Level of Service	H
Analysis Period (min)	15		

dl Defacto Left Lane. Recode with 1 though lane as a left lane.
c Critical Lane Group

Movement	EBL	EBT	EBR	WBL	WBT	WBR	NBL	NBT	NBR	SBL	SBT	SBR
Lane Configurations												
Ideal Flow (vphpl)	1900	1900	1900	1900	1900	1900	1900	1900	1900	1900	1900	1900
Total Lost time (s)		4.0			4.0			4.0	4.0		4.0	
Lane Util. Factor		0.91			0.91			1.00	1.00		1.00	
Frpb, ped/bikes		1.00			1.00			1.00	0.89		0.94	
Flpb, ped/bikes		1.00			1.00			0.96	1.00		0.98	
Frt		0.99			1.00			1.00	0.85		0.93	
Flt Protected		1.00			1.00			0.98	1.00		0.99	
Satd. Flow (prot)		5023			5027			1753	1406		1580	
Flt Permitted		0.78			0.78			0.77	1.00		0.90	
Satd. Flow (perm)		3941			3921			1388	1406		1438	
Volume (vph)	50	932	39	110	1597	50	103	104	200	40	40	90
Peak-hour factor, PHF	0.99	0.99	0.99	0.99	0.99	0.99	0.99	0.99	0.99	0.99	0.99	0.99
Adj. Flow (vph)	51	941	39	111	1613	51	104	105	202	40	40	91
RTOR Reduction (vph)	0	5	0	0	4	0	0	0	64	0	13	0
Lane Group Flow (vph)	0	1026	0	0	1771	0	0	209	138	0	158	0
Confl. Peds. (#/hr)	100		100	100		100	100		100	100		100
Turn Type	Perm			Perm			Perm		Perm	Perm		
Protected Phases		4			8			2			6	
Permitted Phases	4			8			2		2	6		
Actuated Green, G (s)		49.5			49.5			24.5	24.5		24.5	
Effective Green, g (s)		48.5			48.5			23.5	23.5		23.5	
Actuated g/C Ratio		0.61			0.61			0.29	0.29		0.29	
Clearance Time (s)		3.0			3.0			3.0	3.0		3.0	
Lane Grp Cap (vph)		2389			2377			408	413		422	
v/s Ratio Prot												
v/s Ratio Perm		0.26			c0.45			c0.15	0.10		0.11	
v/c Ratio		0.43			0.75			0.51	0.34		0.37	
Uniform Delay, d1		8.4			11.3			23.5	22.1		22.4	
Progression Factor		1.00			1.00			1.00	1.00		1.00	
Incremental Delay, d2		0.6			2.2			4.5	2.2		2.5	
Delay (s)		9.0			13.5			28.0	24.3		24.9	
Level of Service		A			B			C	C		C	
Approach Delay (s)		9.0			13.5			26.2			24.9	
Approach LOS		A			B			C			C	

Intersection Summary			
HCM Average Control Delay	14.2	HCM Level of Service	B
HCM Volume to Capacity ratio	0.67		
Actuated Cycle Length (s)	80.0	Sum of lost time (s)	8.0
Intersection Capacity Utilization	111.7%	ICU Level of Service	H
Analysis Period (min)	15		

c Critical Lane Group

Movement	EBL	EBT	EBR	WBL	WBT	WBR	NBL	NBT	NBR	SBL	SBT	SBR
Lane Configurations												
Ideal Flow (vphpl)	1900	1900	1900	1900	1900	1900	1900	1900	1900	1900	1900	1900
Total Lost time (s)	4.0	4.0		4.0	4.0		4.0	4.0	4.0	4.0	4.0	4.0
Lane Util. Factor	1.00	0.91		1.00	0.91		1.00	0.95	1.00	1.00	0.95	1.00
Frpb, ped/bikes	1.00	0.98		1.00	0.99		1.00	1.00	0.94	1.00	1.00	0.95
Flpb, ped/bikes	1.00	1.00		1.00	1.00		1.00	1.00	1.00	1.00	1.00	1.00
Frt	1.00	0.98		1.00	0.97		1.00	1.00	0.85	1.00	1.00	0.85
Flt Protected	0.95	1.00		0.95	1.00		0.95	1.00	1.00	0.95	1.00	1.00
Satd. Flow (prot)	1770	4910		1770	4864		1770	3539	1489	1770	3539	1499
Flt Permitted	0.95	1.00		0.95	1.00		0.95	1.00	1.00	0.95	1.00	1.00
Satd. Flow (perm)	1770	4910		1770	4864		1770	3539	1489	1770	3539	1499
Volume (vph)	230	799	113	130	1237	360	310	1181	290	510	513	180
Peak-hour factor, PHF	0.95	0.95	0.95	0.95	0.95	0.95	0.95	0.95	0.95	0.95	0.95	0.95
Adj. Flow (vph)	242	841	119	137	1302	379	326	1243	305	537	540	189
RTOR Reduction (vph)	0	15	0	0	44	0	0	0	10	0	0	45
Lane Group Flow (vph)	242	945	0	137	1637	0	326	1243	295	537	540	144
Confl. Peds. (#/hr)			81			22			50			43
Turn Type	Prot			Prot			Prot		pm+ov	Prot		pm+ov
Protected Phases	7	4		3	8		5	2	3	1	6	7
Permitted Phases									2			6
Actuated Green, G (s)	12.0	33.2		12.8	34.0		25.4	33.0	45.8	25.0	32.6	44.6
Effective Green, g (s)	11.0	34.2		11.8	35.0		24.4	34.0	45.8	24.0	33.6	44.6
Actuated g/C Ratio	0.09	0.29		0.10	0.29		0.20	0.28	0.38	0.20	0.28	0.37
Clearance Time (s)	3.0	5.0		3.0	5.0		3.0	5.0	3.0	3.0	5.0	3.0
Vehicle Extension (s)	3.0	3.0		3.0	3.0		3.0	3.0	3.0	3.0	3.0	3.0
Lane Grp Cap (vph)	162	1399		174	1419		360	1003	618	354	991	607
v/s Ratio Prot	c0.14	0.19		0.08	c0.34		0.18	c0.35	0.05	c0.30	0.15	0.02
v/s Ratio Perm									0.15			0.07
v/c Ratio	1.49	0.68		0.79	1.15		0.91	1.24	0.48	1.52	0.54	0.24
Uniform Delay, d1	54.5	38.0		52.9	42.5		46.7	43.0	28.1	48.0	36.7	26.0
Progression Factor	1.00	1.00		1.00	1.00		1.00	1.00	1.00	1.00	1.00	1.00
Incremental Delay, d2	251.9	2.6		20.6	77.6		25.3	116.3	0.6	246.7	2.2	0.2
Delay (s)	306.4	40.6		73.4	120.1		71.9	159.3	28.6	294.7	38.9	26.2
Level of Service	F	D		E	F		E	F	C	F	D	C
Approach Delay (s)		94.1			116.6			122.8			145.5	
Approach LOS		F			F			F			F	

Intersection Summary			
HCM Average Control Delay	120.1	HCM Level of Service	F
HCM Volume to Capacity ratio	1.21		
Actuated Cycle Length (s)	120.0	Sum of lost time (s)	8.0
Intersection Capacity Utilization	119.4%	ICU Level of Service	H
Analysis Period (min)	15		

c Critical Lane Group

Movement	EBL	EBT	EBR	WBL	WBT	WBR	NBL	NBT	NBR	SBL	SBT	SBR
Lane Configurations												
Ideal Flow (vphpl)	1900	1900	1900	1900	1900	1900	1900	1900	1900	1900	1900	1900
Total Lost time (s)		4.0			4.0		4.0	4.0		4.0	4.0	
Lane Util. Factor		1.00			1.00		1.00	0.95		1.00	0.95	
Frpb, ped/bikes		0.93			0.96		1.00	0.99		1.00	0.98	
Flpb, ped/bikes		0.98			0.97		0.97	1.00		0.98	1.00	
Frt		0.95			0.95		1.00	0.99		1.00	0.99	
Flt Protected		0.98			0.98		0.95	1.00		0.95	1.00	
Satd. Flow (prot)		1585			1616		1708	3487		1728	3443	
Flt Permitted		0.65			0.72		0.24	1.00		0.17	1.00	
Satd. Flow (perm)		1061			1182		430	3487		318	3443	
Volume (vph)	132	60	100	120	80	104	50	1101	50	46	873	77
Peak-hour factor, PHF	0.95	0.95	0.95	0.95	0.95	0.95	0.95	0.95	0.95	0.95	0.95	0.95
Adj. Flow (vph)	139	63	105	126	84	109	53	1159	53	48	919	81
RTOR Reduction (vph)	0	23	0	0	23	0	0	4	0	0	7	0
Lane Group Flow (vph)	0	284	0	0	296	0	53	1208	0	48	993	0
Confl. Peds. (#/hr)	100		100	100		100	100		100	100		100
Turn Type	Perm			Perm			Perm			Perm		
Protected Phases		4			4			2			6	
Permitted Phases	4			4			2			6		
Actuated Green, G (s)		23.8			23.8		54.2	54.2		54.2	54.2	
Effective Green, g (s)		23.3			23.3		53.7	53.7		53.7	53.7	
Actuated g/C Ratio		0.27			0.27		0.63	0.63		0.63	0.63	
Clearance Time (s)		3.5			3.5		3.5	3.5		3.5	3.5	
Vehicle Extension (s)		2.0			2.0		2.0	2.0		2.0	2.0	
Lane Grp Cap (vph)		291			324		272	2203		201	2175	
v/s Ratio Prot								c0.35			0.29	
v/s Ratio Perm		c0.27			0.25		0.12			0.15		
v/c Ratio		0.98			0.92		0.19	0.55		0.24	0.46	
Uniform Delay, d1		30.6			29.9		6.6	8.8		6.8	8.1	
Progression Factor		1.00			1.00		1.00	1.00		1.00	1.00	
Incremental Delay, d2		46.0			28.7		1.6	1.0		2.8	0.7	
Delay (s)		76.6			58.6		8.2	9.8		9.6	8.8	
Level of Service		E			E		A	A		A	A	
Approach Delay (s)		76.6			58.6			9.7			8.8	
Approach LOS		E			E			A			A	

Intersection Summary			
HCM Average Control Delay	21.7	HCM Level of Service	C
HCM Volume to Capacity ratio	0.68		
Actuated Cycle Length (s)	85.0	Sum of lost time (s)	8.0
Intersection Capacity Utilization	71.1%	ICU Level of Service	C
Analysis Period (min)	15		

c Critical Lane Group

Movement	EBL	EBT	EBR	WBL	WBT	WBR	NBL	NBT	NBR	SBL	SBT	SBR
Lane Configurations												
Ideal Flow (vphpl)	1900	1900	1900	1900	1900	1900	1900	1900	1900	1900	1900	1900
Total Lost time (s)	4.0	4.0		4.0	4.0		4.0	4.0		4.0	4.0	
Lane Util. Factor	1.00	0.95		1.00	0.95		1.00	0.95		1.00	0.95	
Frpb, ped/bikes	1.00	0.98		1.00	0.93		1.00	0.99		1.00	0.94	
Flpb, ped/bikes	1.00	1.00		1.00	1.00		0.96	1.00		0.98	1.00	
Frt	1.00	0.97		1.00	0.95		1.00	0.99		1.00	0.95	
Flt Protected	0.95	1.00		0.95	1.00		0.95	1.00		0.95	1.00	
Satd. Flow (prot)	1770	3370		1770	3140		1706	3489		1733	3140	
Flt Permitted	0.95	1.00		0.95	1.00		0.23	1.00		0.22	1.00	
Satd. Flow (perm)	1770	3370		1770	3140		407	3489		396	3140	
Volume (vph)	230	560	120	90	530	253	200	838	50	238	555	310
Peak-hour factor, PHF	0.98	0.98	0.98	0.98	0.98	0.98	0.98	0.98	0.98	0.98	0.98	0.98
Adj. Flow (vph)	235	571	122	92	541	258	204	855	51	243	566	316
RTOR Reduction (vph)	0	20	0	0	46	0	0	5	0	0	91	0
Lane Group Flow (vph)	235	673	0	92	753	0	204	901	0	243	791	0
Confl. Peds. (#/hr)			100			100	100		100	100		100
Turn Type	Prot			Prot			Perm			Perm		
Protected Phases	7	4		3	8			2			6	
Permitted Phases							2			6		
Actuated Green, G (s)	10.5	26.0		7.3	22.8		38.2	38.2		38.2	38.2	
Effective Green, g (s)	11.0	25.5		7.8	22.3		39.7	39.7		39.7	39.7	
Actuated g/C Ratio	0.13	0.30		0.09	0.26		0.47	0.47		0.47	0.47	
Clearance Time (s)	4.5	3.5		4.5	3.5		5.5	5.5		5.5	5.5	
Vehicle Extension (s)	2.0	2.0		2.0	2.0		2.0	2.0		2.0	2.0	
Lane Grp Cap (vph)	229	1011		162	824		190	1630		185	1467	
v/s Ratio Prot	c0.13	c0.20		0.05	c0.24			0.26			0.25	
v/s Ratio Perm							0.50			c0.61		
v/c Ratio	1.03	0.67		0.57	0.91		1.07	0.55		1.31	0.54	
Uniform Delay, d1	37.0	26.0		37.0	30.4		22.6	16.3		22.6	16.1	
Progression Factor	1.00	1.00		1.00	1.00		1.00	1.00		1.00	1.00	
Incremental Delay, d2	66.4	1.3		2.7	14.1		86.2	1.4		174.1	1.4	
Delay (s)	103.4	27.3		39.7	44.6		108.9	17.6		196.8	17.6	
Level of Service	F	C		D	D		F	B		F	B	
Approach Delay (s)		46.6			44.1			34.4			56.3	
Approach LOS		D			D			C			E	

Intersection Summary			
HCM Average Control Delay	45.4	HCM Level of Service	D
HCM Volume to Capacity ratio	1.20		
Actuated Cycle Length (s)	85.0	Sum of lost time (s)	16.0
Intersection Capacity Utilization	89.2%	ICU Level of Service	E
Analysis Period (min)	15		

c Critical Lane Group

Movement	EBL	EBR	NBL	NBT	SBT	SBR
Lane Configurations						
Ideal Flow (vphpl)	1900	1900	1900	1900	1900	1900
Total Lost time (s)	4.0	4.0	4.0	4.0	4.0	
Lane Util. Factor	1.00	1.00	1.00	0.95	0.95	
Frt	1.00	0.85	1.00	1.00	0.98	
Flt Protected	0.95	1.00	0.95	1.00	1.00	
Satd. Flow (prot)	1770	1583	1770	3539	3466	
Flt Permitted	0.95	1.00	0.95	1.00	1.00	
Satd. Flow (perm)	1770	1583	1770	3539	3466	
Volume (vph)	65	150	85	1975	752	121
Peak-hour factor, PHF	0.95	0.95	0.95	0.95	0.95	0.95
Adj. Flow (vph)	68	158	89	2079	792	127
RTOR Reduction (vph)	0	119	0	0	13	0
Lane Group Flow (vph)	68	39	89	2079	906	0
Turn Type		Perm	Prot			
Protected Phases	2		3	8	4	
Permitted Phases		2				
Actuated Green, G (s)	19.0	19.0	7.0	52.5	41.0	
Effective Green, g (s)	19.5	19.5	7.0	52.5	41.5	
Actuated g/C Ratio	0.24	0.24	0.09	0.66	0.52	
Clearance Time (s)	4.5	4.5	4.0	4.0	4.5	
Vehicle Extension (s)	3.0	3.0	3.0	3.0	3.0	
Lane Grp Cap (vph)	431	386	155	2322	1798	
v/s Ratio Prot	c0.04		0.05	c0.59	0.26	
v/s Ratio Perm		0.02				
v/c Ratio	0.16	0.10	0.57	0.90	0.50	
Uniform Delay, d1	23.8	23.4	35.1	11.5	12.5	
Progression Factor	1.00	1.00	1.00	1.00	1.94	
Incremental Delay, d2	0.2	0.1	5.1	5.9	0.6	
Delay (s)	24.0	23.6	40.1	17.4	25.0	
Level of Service	C	C	D	B	C	
Approach Delay (s)	23.7			18.3	25.0	
Approach LOS	C			B	C	

Intersection Summary			
HCM Average Control Delay	20.5	HCM Level of Service	C
HCM Volume to Capacity ratio	0.70		
Actuated Cycle Length (s)	80.0	Sum of lost time (s)	8.0
Intersection Capacity Utilization	64.9%	ICU Level of Service	C
Analysis Period (min)	15		

c Critical Lane Group

HCM Signalized Intersection Capacity Analysis 2030 AM Commercial Mit
2: 52nd St. & Telegraph Ave. 1/21/2008

Movement	EBL	EBT	EBR	WBL	WBT	WBR	NBL	NBT	NBR	SBL	SBT	SBR
Lane Configurations												
Ideal Flow (vphpl)	1900	1900	1900	1900	1900	1900	1900	1900	1900	1900	1900	1900
Total Lost time (s)		4.0		4.0	4.0			4.0		4.0	4.0	
Lane Util. Factor		1.00		0.95	0.95			0.95		1.00	0.95	
Frpb, ped/bikes		1.00		1.00	0.99			0.99		1.00	0.96	
Flpb, ped/bikes		1.00		1.00	1.00			1.00		1.00	1.00	
Frt		0.95		1.00	0.91			0.97		1.00	0.96	
Flt Protected		0.98		0.95	1.00			1.00		0.95	1.00	
Satd. Flow (prot)		1750		1681	1596			3411		1770	3261	
Flt Permitted		0.55		0.74	1.00			1.00		0.95	1.00	
Satd. Flow (perm)		978		1302	1596			3411		1770	3261	
Volume (vph)	10	10	10	359	330	470	0	1165	245	110	1341	460
Peak-hour factor, PHF	0.95	0.95	0.95	0.95	0.95	0.95	0.95	0.95	0.95	0.95	0.95	0.95
Adj. Flow (vph)	11	11	11	378	347	495	0	1226	258	116	1412	484
RTOR Reduction (vph)	0	6	0	0	43	0	0	15	0	0	28	0
Lane Group Flow (vph)	0	27	0	378	799	0	0	1469	0	116	1868	0
Confl. Peds. (#/hr)	4					4	44		12	12		44
Turn Type	Perm			Perm						Prot		
Protected Phases		4			8			2		1	6	
Permitted Phases	4			8								
Actuated Green, G (s)		51.5		51.5	51.5			48.5		6.5	59.5	
Effective Green, g (s)		52.0		52.0	52.0			49.0		7.0	60.0	
Actuated g/C Ratio		0.43		0.43	0.43			0.41		0.06	0.50	
Clearance Time (s)		4.5		4.5	4.5			4.5		4.5	4.5	
Vehicle Extension (s)		2.0		2.0	2.0			2.0		2.0	2.0	
Lane Grp Cap (vph)		424		564	692			1393		103	1631	
v/s Ratio Prot								0.43		0.07	c0.57	
v/s Ratio Perm		0.03		0.29	0.50							
v/c Ratio		0.06		0.67	1.15			1.05		1.13	1.15	
Uniform Delay, d1		19.8		27.2	34.0			35.5		56.5	30.0	
Progression Factor		1.00		1.00	1.00			0.87		1.00	1.00	
Incremental Delay, d2		0.0		2.5	85.4			29.3		126.7	73.2	
Delay (s)		19.8		29.6	119.4			60.1		183.2	103.2	
Level of Service		B		C	F			E		F	F	
Approach Delay (s)		19.8			91.6			60.1			107.8	
Approach LOS		B			F			E			F	

Intersection Summary			
HCM Average Control Delay	88.1	HCM Level of Service	F
HCM Volume to Capacity ratio	1.15		
Actuated Cycle Length (s)	120.0	Sum of lost time (s)	8.0
Intersection Capacity Utilization	99.2%	ICU Level of Service	F
Analysis Period (min)	15		

c Critical Lane Group

HCM Signalized Intersection Capacity Analysis 2030 AM Commercial Mit
3: 51st St. & Telegraph Ave. 1/21/2008

Movement	EBL	EBT	EBR	WBL	WBT	WBR	NBL	NBT	NBR	SBL	SBT	SBR
Lane Configurations												
Ideal Flow (vphpl)	1900	1900	1900	1900	1900	1900	1900	1900	1900	1900	1900	1900
Total Lost time (s)	3.0	3.0		3.0	3.0		3.0	3.0		3.0	3.0	
Lane Util. Factor	0.97	0.95		1.00	0.95		1.00	0.95		1.00	0.95	
Frpb, ped/bikes	1.00	0.99		1.00	0.99		1.00	0.98		1.00	0.98	
Flpb, ped/bikes	1.00	1.00		1.00	1.00		1.00	1.00		1.00	1.00	
Frt	1.00	0.98		1.00	0.96		1.00	0.97		1.00	0.98	
Flt Protected	0.95	1.00		0.95	1.00		0.95	1.00		0.95	1.00	
Satd. Flow (prot)	3433	3417		1770	3370		1770	3391		1770	3393	
Flt Permitted	0.95	1.00		0.95	1.00		0.95	1.00		0.95	1.00	
Satd. Flow (perm)	3433	3417		1770	3370		1770	3391		1770	3393	
Volume (vph)	460	650	113	140	820	320	120	671	140	320	1180	220
Peak-hour factor, PHF	0.96	0.96	0.96	0.96	0.96	0.96	0.96	0.96	0.96	0.96	0.96	0.96
Adj. Flow (vph)	479	677	118	146	854	333	125	699	146	333	1229	229
RTOR Reduction (vph)	0	11	0	0	34	0	0	15	0	0	13	0
Lane Group Flow (vph)	479	784	0	146	1153	0	125	830	0	333	1445	0
Confl. Peds. (#/hr)	6		24	24		6	36		28	28		36
Turn Type	Prot			Prot			Prot			Prot		
Protected Phases	7	4		3	8		5	2		1	6	
Permitted Phases												
Actuated Green, G (s)	15.5	36.9		12.6	34.0		8.5	30.6		22.9	45.0	
Effective Green, g (s)	16.0	38.9		13.1	36.0		9.0	32.6		23.4	47.0	
Actuated g/C Ratio	0.13	0.32		0.11	0.30		0.08	0.27		0.19	0.39	
Clearance Time (s)	3.5	5.0		3.5	5.0		3.5	5.0		3.5	5.0	
Vehicle Extension (s)	2.0	2.0		2.0	2.0		2.0	2.0		2.0	2.0	
Lane Grp Cap (vph)	458	1108		193	1011		133	921		345	1329	
v/s Ratio Prot	c0.14	0.23		0.08	c0.34		0.07	0.24		c0.19	c0.43	
v/s Ratio Perm												
v/c Ratio	1.05	0.71		0.76	1.14		0.94	0.90		0.97	1.09	
Uniform Delay, d1	52.0	35.6		51.9	42.0		55.2	42.2		47.9	36.5	
Progression Factor	1.00	1.00		1.00	1.00		1.00	1.00		1.26	0.79	
Incremental Delay, d2	54.5	1.7		13.9	75.2		58.5	13.7		8.0	40.8	
Delay (s)	106.5	37.3		65.8	117.2		113.7	55.8		68.2	69.5	
Level of Service	F	D		E	F		F	E		E	E	
Approach Delay (s)		63.3			111.6			63.3			69.2	
Approach LOS		E			F			E			E	

Intersection Summary			
HCM Average Control Delay	77.3	HCM Level of Service	E
HCM Volume to Capacity ratio	1.07		
Actuated Cycle Length (s)	120.0	Sum of lost time (s)	9.0
Intersection Capacity Utilization	106.3%	ICU Level of Service	G
Analysis Period (min)	15		

c Critical Lane Group

HCM Signalized Intersection Capacity Analysis 2030 AM Commercial Mit
7: 40th St. & Market St. 1/21/2008

Movement	EBL	EBT	EBR	WBL	WBT	WBR	NBL	NBT	NBR	SBL	SBT	SBR
Lane Configurations												
Ideal Flow (vphpl)	1900	1900	1900	1900	1900	1900	1900	1900	1900	1900	1900	1900
Total Lost time (s)	4.0	4.0		4.0	4.0		4.0	4.0		4.0	4.0	
Lane Util. Factor	1.00	0.95		1.00	0.95		1.00	1.00		1.00	1.00	
Frpb, ped/bikes	1.00	0.99		1.00	0.99		1.00	1.00		1.00	1.00	
Flpb, ped/bikes	0.99	1.00		1.00	1.00		1.00	1.00		0.99	1.00	
Frt	1.00	0.96		1.00	0.98		1.00	0.99		1.00	0.98	
Flt Protected	0.95	1.00		0.95	1.00		0.95	1.00		0.95	1.00	
Satd. Flow (prot)	1758	3377		1764	3457		1768	1831		1750	1815	
Flt Permitted	0.16	1.00		0.27	1.00		0.14	1.00		0.40	1.00	
Satd. Flow (perm)	291	3377		494	3457		264	1831		729	1815	
Volume (vph)	180	521	190	93	934	114	160	381	39	206	600	110
Peak-hour factor, PHF	0.95	0.95	0.95	0.95	0.95	0.95	0.95	0.95	0.95	0.95	0.95	0.95
Adj. Flow (vph)	189	548	200	98	983	120	168	401	41	217	632	116
RTOR Reduction (vph)	0	41	0	0	10	0	0	6	0	0	5	0
Lane Group Flow (vph)	189	707	0	98	1093	0	168	436	0	217	743	0
Confl. Peds. (#/hr)	30		12	12		30	6		54	54		6
Turn Type	Perm			Perm			Perm			Perm		
Protected Phases		4			8			2			6	
Permitted Phases	4			8			2			6		
Actuated Green, G (s)	26.4	26.4		26.4	26.4		31.9	31.9		31.9	31.9	
Effective Green, g (s)	25.4	25.4		25.4	25.4		31.4	31.4		31.4	31.4	
Actuated g/C Ratio	0.39	0.39		0.39	0.39		0.48	0.48		0.48	0.48	
Clearance Time (s)	3.0	3.0		3.0	3.0		3.5	3.5		3.5	3.5	
Vehicle Extension (s)	3.0	3.0		3.0	3.0		3.0	3.0		3.0	3.0	
Lane Grp Cap (vph)	114	1324		194	1355		128	887		353	879	
v/s Ratio Prot		0.21			0.32			0.24			0.41	
v/s Ratio Perm	c0.65			0.20			c0.64			0.30		
v/c Ratio	1.66	0.53		0.51	0.81		1.31	0.49		0.61	0.85	
Uniform Delay, d1	19.7	15.2		14.9	17.5		16.7	11.3		12.3	14.6	
Progression Factor	1.00	1.00		1.00	1.00		1.00	1.00		1.00	1.00	
Incremental Delay, d2	331.6	1.5		9.1	5.2		185.4	0.4		3.2	7.5	
Delay (s)	351.3	16.7		24.0	22.7		202.1	11.7		15.4	22.1	
Level of Service	F	B		C	C		F	B		B	C	
Approach Delay (s)		84.2			22.8			64.2			20.6	
Approach LOS		F			C			E			C	

Intersection Summary			
HCM Average Control Delay	44.5	HCM Level of Service	D
HCM Volume to Capacity ratio	1.47		
Actuated Cycle Length (s)	64.8	Sum of lost time (s)	8.0
Intersection Capacity Utilization	101.6%	ICU Level of Service	G
Analysis Period (min)	15		

c Critical Lane Group

HCM Signalized Intersection Capacity Analysis 2030 AM Commercial Mit
13: 40th St. & Telegraph Ave. 1/21/2008

Movement	EBL	EBT	EBR	WBL	WBT	WBR	NBL	NBT	NBR	SBL	SBT	SBR
Lane Configurations												
Ideal Flow (vphpl)	1900	1900	1900	1900	1900	1900	1900	1900	1900	1900	1900	1900
Total Lost time (s)	3.4	3.4		3.4	3.4		3.4	3.4		3.4	3.4	
Lane Util. Factor	1.00	0.95		1.00	0.95		1.00	0.95		1.00	0.95	
Frpb, ped/bikes	1.00	0.90		1.00	0.97		1.00	0.98		1.00	0.97	
Flpb, ped/bikes	1.00	1.00		1.00	1.00		1.00	1.00		0.98	1.00	
Frt	1.00	0.94		1.00	0.98		1.00	0.98		1.00	0.97	
Flt Protected	0.95	1.00		0.95	1.00		0.95	1.00		0.95	1.00	
Satd. Flow (prot)	1770	3004		1770	3393		1770	3420		1736	3333	
Flt Permitted	0.13	1.00		0.13	1.00		0.06	1.00		0.37	1.00	
Satd. Flow (perm)	243	3004		243	3393		118	3420		681	3333	
Volume (vph)	146	420	267	128	732	90	135	505	59	100	1354	320
Peak-hour factor, PHF	0.95	0.95	0.95	0.95	0.95	0.95	0.95	0.95	0.95	0.95	0.95	0.95
Adj. Flow (vph)	154	442	281	135	771	95	142	532	62	105	1425	337
RTOR Reduction (vph)	0	80	0	0	8	0	0	8	0	0	17	0
Lane Group Flow (vph)	154	643	0	135	858	0	142	586	0	105	1745	0
Confl. Peds. (#/hr)	72		137	137		72			58	58		92
Turn Type	pm pt			pm pt			pm pt			pm pt		
Protected Phases	7	4		3	8		5	2		1	6	
Permitted Phases	4			8			2			6		
Actuated Green, G (s)	36.0	30.0		36.0	30.0		68.5	62.5		67.5	62.0	
Effective Green, g (s)	37.2	30.6		37.2	30.6		69.7	63.1		68.7	62.6	
Actuated g/C Ratio	0.31	0.26		0.31	0.26		0.58	0.53		0.57	0.52	
Clearance Time (s)	4.0	4.0		4.0	4.0		4.0	4.0		4.0	4.0	
Vehicle Extension (s)	3.0	2.0		3.0	2.0		2.0	2.0		2.0	2.0	
Lane Grp Cap (vph)	159	766		159	865		159	1798		444	1739	
v/s Ratio Prot	c0.05	0.21		0.05	c0.25		c0.05	0.17		0.01	c0.52	
v/s Ratio Perm	0.25			0.22			0.47			0.12		
v/c Ratio	0.97	0.84		0.85	0.99		0.89	0.33		0.24	1.00	
Uniform Delay, d1	37.8	42.4		33.7	44.6		31.8	16.3		12.0	28.7	
Progression Factor	1.16	0.76		1.00	1.00		1.50	1.08		1.00	1.00	
Incremental Delay, d2	56.0	6.6		32.2	28.4		40.3	0.5		0.1	22.4	
Delay (s)	99.9	38.8		65.8	73.0		87.9	18.0		12.1	51.1	
Level of Service	F	D		E	E		F	B		B	D	
Approach Delay (s)		49.6			72.0			31.5			48.9	
Approach LOS		D			E			C			D	

Intersection Summary			
HCM Average Control Delay	51.3	HCM Level of Service	D
HCM Volume to Capacity ratio	0.99		
Actuated Cycle Length (s)	120.0	Sum of lost time (s)	13.6
Intersection Capacity Utilization	101.3%	ICU Level of Service	G
Analysis Period (min)	15		

c Critical Lane Group

Movement	EBL	EBT	EBR	WBL	WBT	WBR	NBL	NBT	NBR	SBL	SBT	SBR
Lane Configurations												
Ideal Flow (vphpl)	1900	1900	1900	1900	1900	1900	1900	1900	1900	1900	1900	1900
Total Lost time (s)		4.0		4.0	4.0		4.0	4.0		4.0	4.0	
Lane Util. Factor		0.91		1.00	0.95		1.00	1.00		1.00	1.00	
Frpb, ped/bikes		1.00		1.00	1.00		1.00	0.98		1.00	0.99	
Flpb, ped/bikes		1.00		1.00	1.00		1.00	1.00		0.96	1.00	
Frt		0.99		1.00	0.98		1.00	0.95		1.00	0.96	
Flt Protected		0.99		0.95	1.00		0.95	1.00		0.95	1.00	
Satd. Flow (prot)		4981		1762	3446		1770	1729		1704	1759	
Flt Permitted		0.66		0.21	1.00		0.10	1.00		0.49	1.00	
Satd. Flow (perm)		3324		384	3446		189	1729		880	1759	
Volume (vph)	210	720	50	71	1092	191	100	189	90	200	493	200
Peak-hour factor, PHF	0.95	0.95	0.95	0.95	0.95	0.95	0.95	0.95	0.95	0.95	0.95	0.95
Adj. Flow (vph)	221	758	53	75	1149	201	105	199	95	211	519	211
RTOR Reduction (vph)	0	5	0	0	13	0	0	16	0	0	13	0
Lane Group Flow (vph)	0	1027	0	75	1337	0	105	278	0	211	717	0
Confl. Peds. (#/hr)	24		18	18		24	24		48	48		24
Turn Type	Perm			Perm			Perm			Perm		
Protected Phases		4			8			2			6	
Permitted Phases	4			8			2			6		
Actuated Green, G (s)		51.0		51.0	51.0		49.0	49.0		49.0	49.0	
Effective Green, g (s)		52.0		52.0	52.0		50.0	50.0		50.0	50.0	
Actuated g/C Ratio		0.47		0.47	0.47		0.45	0.45		0.45	0.45	
Clearance Time (s)		5.0		5.0	5.0		5.0	5.0		5.0	5.0	
Lane Grp Cap (vph)		1571		182	1629		86	786		400	800	
v/s Ratio Prot					c0.39			0.16			0.41	
v/s Ratio Perm		0.31		0.20			c0.56			0.24		
v/c Ratio		3.03dl		0.41	0.82		1.22	0.35		0.53	0.90	
Uniform Delay, d1		22.1		19.0	25.0		30.0	19.5		21.5	27.6	
Progression Factor		1.00		1.00	1.00		1.00	1.00		1.00	1.00	
Incremental Delay, d2		2.1		6.8	4.8		167.9	1.2		4.9	14.8	
Delay (s)		24.3		25.7	29.8		197.9	20.7		26.4	42.4	
Level of Service		C		C	C		F	C		C	D	
Approach Delay (s)		24.3			29.6			67.4			38.8	
Approach LOS		C			C			E			D	

Intersection Summary			
HCM Average Control Delay	34.4	HCM Level of Service	C
HCM Volume to Capacity ratio	1.02		
Actuated Cycle Length (s)	110.0	Sum of lost time (s)	8.0
Intersection Capacity Utilization	142.6%	ICU Level of Service	H
Analysis Period (min)	15		

dl Defacto Left Lane. Recode with 1 though lane as a left lane.
c Critical Lane Group

Movement	EBL	EBT	EBR	WBL	WBT	WBR	NBL	NBT	NBR	SBL	SBT	SBR
Lane Configurations												
Ideal Flow (vphpl)	1900	1900	1900	1900	1900	1900	1900	1900	1900	1900	1900	1900
Total Lost time (s)		3.4			3.4		3.4	3.4		3.4	3.4	
Lane Util. Factor		0.91			0.91		1.00	0.95		1.00	0.95	
Frpb, ped/bikes		1.00			0.99		1.00	0.99		1.00	0.99	
Flpb, ped/bikes		1.00			1.00		1.00	1.00		1.00	1.00	
Frt		0.98			0.98		1.00	0.97		1.00	0.97	
Flt Protected		0.99			0.99		0.95	1.00		0.95	1.00	
Satd. Flow (prot)		4931			4909		1770	3409		1765	3420	
Flt Permitted		0.64			0.64		0.13	1.00		0.24	1.00	
Satd. Flow (perm)		3166			3144		244	3409		440	3420	
Volume (vph)	157	988	187	200	1146	198	120	410	90	363	1136	237
Peak-hour factor, PHF	0.95	0.95	0.95	0.95	0.95	0.95	0.95	0.95	0.95	0.95	0.95	0.95
Adj. Flow (vph)	165	1040	197	211	1206	208	126	432	95	382	1196	249
RTOR Reduction (vph)	0	16	0	0	16	0	0	16	0	0	15	0
Lane Group Flow (vph)	0	1386	0	0	1609	0	126	511	0	382	1430	0
Confl. Peds. (#/hr)	40		9			40	25		31	31		25
Turn Type	Perm			pm pt			pm pt			pm pt		
Protected Phases		4		3	8		5	2		1	6	
Permitted Phases	4			8			2			6		
Actuated Green, G (s)		58.0			58.0		34.4	29.9		54.0	46.0	
Effective Green, g (s)		58.6			58.6		35.1	30.5		54.6	46.6	
Actuated g/C Ratio		0.49			0.49		0.29	0.25		0.46	0.39	
Clearance Time (s)		4.0			4.0		3.5	4.0		3.5	4.0	
Vehicle Extension (s)		2.0			2.0		3.0	2.0		3.0	2.0	
Lane Grp Cap (vph)		1546			1535		130	866		429	1328	
v/s Ratio Prot							0.04	0.15		c0.15	c0.42	
v/s Ratio Perm		0.44			c0.51		0.25			0.25		
v/c Ratio		1.67dl			2.34dl		0.97	0.59		0.89	1.08	
Uniform Delay, d1		27.9			30.7		42.3	39.3		24.8	36.7	
Progression Factor		0.93			1.00		0.99	0.82		0.76	0.57	
Incremental Delay, d2		6.5			36.7		66.5	2.8		14.6	44.6	
Delay (s)		32.3			67.4		108.6	35.1		33.4	65.4	
Level of Service		C			E		F	D		C	E	
Approach Delay (s)		32.3			67.4			49.3			58.7	
Approach LOS		C			E			D			E	

Intersection Summary			
HCM Average Control Delay	53.4	HCM Level of Service	D
HCM Volume to Capacity ratio	1.06		
Actuated Cycle Length (s)	120.0	Sum of lost time (s)	10.2
Intersection Capacity Utilization	117.0%	ICU Level of Service	H
Analysis Period (min)	15		

dl Defacto Left Lane. Recode with 1 though lane as a left lane.
c Critical Lane Group

Movement	EBL	EBT	EBR	WBL	WBT	WBR	NBL	NBT	NBR	SBL	SBT	SBR
Lane Configurations												
Ideal Flow (vphpl)	1900	1900	1900	1900	1900	1900	1900	1900	1900	1900	1900	1900
Total Lost time (s)	4.0	4.0		4.0	4.0		4.0	4.0	4.0	4.0	4.0	4.0
Lane Util. Factor	1.00	0.91		1.00	0.91		1.00	0.95	1.00	1.00	0.95	1.00
Frpb, ped/bikes	1.00	0.99		1.00	0.99		1.00	1.00	0.96	1.00	1.00	0.96
Flpb, ped/bikes	1.00	1.00		1.00	1.00		1.00	1.00	1.00	1.00	1.00	1.00
Frt	1.00	0.98		1.00	0.96		1.00	1.00	0.85	1.00	1.00	0.85
Flt Protected	0.95	1.00		0.95	1.00		0.95	1.00	1.00	0.95	1.00	1.00
Satd. Flow (prot)	1770	4922		1770	4839		1770	3539	1515	1770	3539	1523
Flt Permitted	0.95	1.00		0.95	1.00		0.95	1.00	1.00	0.95	1.00	1.00
Satd. Flow (perm)	1770	4922		1770	4839		1770	3539	1515	1770	3539	1523
Volume (vph)	170	1200	171	210	1141	380	140	422	130	390	1441	250
Peak-hour factor, PHF	0.95	0.95	0.95	0.95	0.95	0.95	0.95	0.95	0.95	0.95	0.95	0.95
Adj. Flow (vph)	179	1263	180	221	1201	400	147	444	137	411	1517	263
RTOR Reduction (vph)	0	15	0	0	50	0	0	0	33	0	0	13
Lane Group Flow (vph)	179	1428	0	221	1551	0	147	444	104	411	1517	250
Confl. Peds. (#/hr)			66			23			38			26
Turn Type	Prot			Prot			Prot		pm ov	Prot		pm ov
Protected Phases	7	4		3	8		5	2	3	1	6	7
Permitted Phases									2			6
Actuated Green, G (s)	12.0	32.0		15.0	35.0		11.0	28.0	43.0	29.0	46.0	58.0
Effective Green, g (s)	11.0	33.0		14.0	36.0		10.0	29.0	43.0	28.0	47.0	58.0
Actuated g/C Ratio	0.09	0.28		0.12	0.30		0.08	0.24	0.36	0.23	0.39	0.48
Clearance Time (s)	3.0	5.0		3.0	5.0		3.0	5.0	3.0	3.0	5.0	3.0
Vehicle Extension (s)	2.0	2.0		2.0	2.0		2.0	2.0	2.0	2.0	2.0	2.0
Lane Grp Cap (vph)	162	1354		207	1452		148	855	593	413	1386	736
v/s Ratio Prot	0.10	0.29		c0.12	c0.32		c0.08	0.13	0.02	0.23	c0.43	0.03
v/s Ratio Perm									0.05			0.13
v/c Ratio	1.10	1.05		1.07	1.07		0.99	0.52	0.18	1.00	1.09	0.34
Uniform Delay, d1	54.5	43.5		53.0	42.0		55.0	39.5	26.4	45.9	36.5	19.2
Progression Factor	1.00	1.00		1.00	1.00		1.00	1.00	1.00	1.00	1.00	1.00
Incremental Delay, d2	101.6	40.2		81.6	44.2		71.6	2.3	0.1	42.7	54.3	0.1
Delay (s)	156.1	83.7		134.6	86.2		126.5	41.7	26.4	88.6	90.8	19.3
Level of Service	F	F		F	F		F	D	C	F	F	B
Approach Delay (s)		91.7			92.1			56.0			81.8	
Approach LOS		F			F			E			F	

Intersection Summary			
HCM Average Control Delay	84.3	HCM Level of Service	F
HCM Volume to Capacity ratio	1.09		
Actuated Cycle Length (s)	120.0	Sum of lost time (s)	16.0
Intersection Capacity Utilization	101.4%	ICU Level of Service	G
Analysis Period (min)	15		

c Critical Lane Group

Movement	EBL	EBT	EBR	WBL	WBT	WBR	NBL	NBT	NBR	SBL	SBT	SBR
Lane Configurations												
Ideal Flow (vphpl)	1900	1900	1900	1900	1900	1900	1900	1900	1900	1900	1900	1900
Total Lost time (s)		4.0		4.0	4.0			4.0		4.0	4.0	
Lane Util. Factor		1.00		0.95	0.95			0.95		1.00	0.95	
Frpb, ped/bikes		1.00		1.00	0.97			0.98		1.00	0.95	
Flpb, ped/bikes		0.99		1.00	1.00			1.00		1.00	1.00	
Frt		0.93		1.00	0.93			0.95		1.00	0.95	
Flt Protected		0.99		0.95	1.00			1.00		0.95	1.00	
Satd. Flow (prot)		1704		1681	1586			3275		1770	3208	
Flt Permitted		0.56		0.73	1.00			1.00		0.95	1.00	
Satd. Flow (perm)		963		1290	1586			3275		1770	3208	
Volume (vph)	10	10	20	126	120	120	0	1122	619	200	896	420
Peak-hour factor, PHF	0.95	0.95	0.95	0.95	0.95	0.95	0.95	0.95	0.95	0.95	0.95	0.95
Adj. Flow (vph)	11	11	21	133	126	126	0	1181	652	211	943	442
RTOR Reduction (vph)	0	20	0	0	38	0	0	67	0	0	48	0
Lane Group Flow (vph)	0	23	0	133	214	0	0	1766	0	211	1337	0
Confl. Peds. (#/hr)	36					36	48		16	16		48
Turn Type	Perm			Perm						Prot		
Protected Phases		7			8			2		1	6	
Permitted Phases	7			8								
Actuated Green, G (s)		4.0		16.5	16.5			52.0		9.5	66.0	
Effective Green, g (s)		4.5		17.0	17.0			52.5		10.0	66.5	
Actuated g/C Ratio		0.04		0.17	0.17			0.52		0.10	0.66	
Clearance Time (s)		4.5		4.5	4.5			4.5		4.5	4.5	
Vehicle Extension (s)		2.0		2.0	2.0			2.0		2.0	2.0	
Lane Grp Cap (vph)		43		219	270			1719		177	2133	
v/s Ratio Prot								c0.54		c0.12	0.42	
v/s Ratio Perm		c0.02		0.10	0.13							
v/c Ratio		0.53		0.61	0.79			1.03		1.19	0.63	
Uniform Delay, d1		46.7		38.4	39.8			23.8		45.0	9.6	
Progression Factor		1.00		1.00	1.00			0.71		1.00	1.00	
Incremental Delay, d2		6.2		3.2	13.7			15.2		128.8	1.4	
Delay (s)		53.0		41.7	53.5			32.0		173.8	11.0	
Level of Service		D		D	D			C		F	B	
Approach Delay (s)		53.0			49.4			32.0			32.5	
Approach LOS		D			D			C			C	

Intersection Summary			
HCM Average Control Delay	34.2	HCM Level of Service	C
HCM Volume to Capacity ratio	0.97		
Actuated Cycle Length (s)	100.0	Sum of lost time (s)	16.0
Intersection Capacity Utilization	89.7%	ICU Level of Service	E
Analysis Period (min)	15		

c Critical Lane Group

Movement	EBL	EBT	EBR	WBL	WBT	WBR	NBL	NBT	NBR	SBL	SBT	SBR
Lane Configurations												
Ideal Flow (vphpl)	1900	1900	1900	1900	1900	1900	1900	1900	1900	1900	1900	1900
Total Lost time (s)	4.0	4.0		4.0	4.0		4.0	4.0		4.0	4.0	
Lane Util. Factor	0.97	0.95		1.00	0.95		1.00	0.95		1.00	0.95	
Frpb, ped/bikes	1.00	0.98		1.00	0.99		1.00	0.97		1.00	0.98	
Flpb, ped/bikes	1.00	1.00		1.00	1.00		1.00	1.00		1.00	1.00	
Frt	1.00	0.98		1.00	0.94		1.00	0.96		1.00	0.99	
Flt Protected	0.95	1.00		0.95	1.00		0.95	1.00		0.95	1.00	
Satd. Flow (prot)	3433	3418		1770	3299		1770	3283		1770	3415	
Flt Permitted	0.95	1.00		0.95	1.00		0.95	1.00		0.95	1.00	
Satd. Flow (perm)	3433	3418		1770	3299		1770	3283		1770	3415	
Volume (vph)	460	930	132	160	580	350	100	961	350	300	692	60
Peak-hour factor, PHF	0.95	0.95	0.95	0.95	0.95	0.95	0.95	0.95	0.95	0.95	0.95	0.95
Adj. Flow (vph)	484	979	139	168	611	368	105	1012	368	316	728	63
RTOR Reduction (vph)	0	11	0	0	90	0	0	37	0	0	6	0
Lane Group Flow (vph)	484	1107	0	168	889	0	105	1343	0	316	785	0
Confl. Peds. (#/hr)	15		48	48		15	123		48	48		123
Turn Type	Prot			Prot			Prot			Prot		
Protected Phases	7	4		3	8		5	2		1	6	
Permitted Phases												
Actuated Green, G (s)	11.5	27.0		8.5	24.0		8.7	34.0		13.5	38.8	
Effective Green, g (s)	11.0	28.0		8.0	25.0		8.2	35.0		13.0	39.8	
Actuated g/C Ratio	0.11	0.28		0.08	0.25		0.08	0.35		0.13	0.40	
Clearance Time (s)	3.5	5.0		3.5	5.0		3.5	5.0		3.5	5.0	
Vehicle Extension (s)	2.0	2.0		2.0	2.0		2.0	2.0		2.0	2.0	
Lane Grp Cap (vph)	378	957		142	825		145	1149		230	1359	
v/s Ratio Prot	c0.14	c0.32		0.09	0.27		0.06	c0.41		c0.18	0.23	
v/s Ratio Perm												
v/c Ratio	1.28	1.16		1.18	1.08		0.72	1.17		1.37	0.58	
Uniform Delay, d1	44.5	36.0		46.0	37.5		44.8	32.5		43.5	23.5	
Progression Factor	1.00	1.00		1.00	1.00		1.00	1.00		1.21	0.71	
Incremental Delay, d2	145.1	82.5		133.1	54.4		14.1	85.6		188.4	1.4	
Delay (s)	189.6	118.5		179.1	91.9		58.8	118.1		241.2	18.2	
Level of Service	F	F		F	F		E	F		F	B	
Approach Delay (s)		140.0			104.6			113.9			81.8	
Approach LOS		F			F			F			F	

Intersection Summary			
HCM Average Control Delay	113.1	HCM Level of Service	F
HCM Volume to Capacity ratio	1.23		
Actuated Cycle Length (s)	100.0	Sum of lost time (s)	16.0
Intersection Capacity Utilization	109.7%	ICU Level of Service	H
Analysis Period (min)	15		

c Critical Lane Group

Movement	EBL	EBT	EBR	WBL	WBT	WBR	NBL	NBT	NBR	SBL	SBT	SBR
Lane Configurations												
Ideal Flow (vphpl)	1900	1900	1900	1900	1900	1900	1900	1900	1900	1900	1900	1900
Total Lost time (s)	4.0	4.0		4.0	4.0			4.0			4.0	
Lane Util. Factor	1.00	0.95		1.00	0.95			0.95			0.95	
Frpb, ped/bikes	1.00	0.99		1.00	1.00			1.00			1.00	
Flpb, ped/bikes	1.00	1.00		0.99	1.00			1.00			1.00	
Frt	1.00	0.99		1.00	0.99			0.98			0.97	
Flt Protected	0.95	1.00		0.95	1.00			0.99			0.99	
Satd. Flow (prot)	1762	3458		1752	3498			3432			3390	
Flt Permitted	0.21	1.00		0.16	1.00			0.83			0.85	
Satd. Flow (perm)	382	3458		292	3498			2875			2907	
Volume (vph)	60	1154	120	74	1033	68	90	333	57	33	160	50
Peak-hour factor, PHF	0.99	0.99	0.99	0.99	0.99	0.99	0.99	0.99	0.99	0.99	0.99	0.99
Adj. Flow (vph)	61	1166	121	75	1043	69	91	336	58	33	162	51
RTOR Reduction (vph)	0	10	0	0	6	0	0	13	0	0	30	0
Lane Group Flow (vph)	61	1277	0	75	1106	0	0	472	0	0	217	0
Confl. Peds. (#/hr)	24		78	78		24	8		6	6		8
Turn Type	Perm			Perm			Perm			Perm		
Protected Phases		4			8			2			6	
Permitted Phases	4			8			2			6		
Actuated Green, G (s)	50.0	50.0		50.0	50.0			20.0			20.0	
Effective Green, g (s)	51.0	51.0		51.0	51.0			21.0			21.0	
Actuated g/C Ratio	0.64	0.64		0.64	0.64			0.26			0.26	
Clearance Time (s)	5.0	5.0		5.0	5.0			5.0			5.0	
Lane Grp Cap (vph)	244	2204		186	2230			755			763	
v/s Ratio Prot		c0.37			0.32							
v/s Ratio Perm	0.16			0.26				c0.16			0.07	
v/c Ratio	0.25	0.58		0.40	0.50			0.62			0.28	
Uniform Delay, d1	6.3	8.3		7.1	7.7			26.0			23.5	
Progression Factor	0.55	0.44		0.40	0.26			0.74			1.00	
Incremental Delay, d2	1.0	0.4		3.4	0.4			2.0			0.9	
Delay (s)	4.4	4.1		6.3	2.4			21.2			24.4	
Level of Service	A	A		A	A			C			C	
Approach Delay (s)		4.1			2.7			21.2			24.4	
Approach LOS		A			A			C			C	

Intersection Summary			
HCM Average Control Delay	7.6	HCM Level of Service	A
HCM Volume to Capacity ratio	0.59		
Actuated Cycle Length (s)	80.0	Sum of lost time (s)	8.0
Intersection Capacity Utilization	80.7%	ICU Level of Service	D
Analysis Period (min)	15		
c Critical Lane Group			

Movement	EBL	EBT	EBR	WBL	WBT	WBR	NBL	NBT	NBR	SBL	SBT	SBR
Lane Configurations												
Ideal Flow (vphpl)	1900	1900	1900	1900	1900	1900	1900	1900	1900	1900	1900	1900
Total Lost time (s)	3.4	3.4		3.4	3.4		3.4	3.4		3.4	3.4	
Lane Util. Factor	1.00	0.95		1.00	0.95		1.00	0.95		1.00	0.95	
Frpb, ped/bikes	1.00	0.98		1.00	0.95		1.00	0.99		1.00	0.95	
Flpb, ped/bikes	1.00	1.00		1.00	1.00		1.00	1.00		1.00	1.00	
Frt	1.00	0.98		1.00	0.98		1.00	0.99		1.00	0.96	
Flt Protected	0.95	1.00		0.95	1.00		0.95	1.00		0.95	1.00	
Satd. Flow (prot)	1770	3429		1770	3296		1770	3466		1770	3235	
Flt Permitted	0.14	1.00		0.16	1.00		0.11	1.00		0.12	1.00	
Satd. Flow (perm)	258	3429		292	3296		206	3466		228	3235	
Volume (vph)	249	934	109	75	557	110	466	1470	124	130	689	255
Peak-hour factor, PHF	0.98	0.98	0.98	0.98	0.98	0.98	0.98	0.98	0.98	0.98	0.98	0.98
Adj. Flow (vph)	254	953	111	77	568	112	476	1500	127	133	703	260
RTOR Reduction (vph)	0	8	0	0	15	0	0	6	0	0	34	0
Lane Group Flow (vph)	254	1056	0	77	665	0	476	1621	0	133	929	0
Confl. Peds. (#/hr)	94		86	86		94			40			111
Turn Type	pm pt			pm pt			pm pt			pm pt		
Protected Phases	7	4		3	8		5	2		1	6	
Permitted Phases	4			8			2			6		
Actuated Green, G (s)	40.9	33.7		28.1	24.9		61.1	51.6		37.6	32.1	
Effective Green, g (s)	41.5	34.3		29.3	25.5		61.7	52.2		38.8	32.7	
Actuated g/C Ratio	0.38	0.31		0.27	0.23		0.56	0.47		0.35	0.30	
Clearance Time (s)	4.0	4.0		4.0	4.0		4.0	4.0		4.0	4.0	
Vehicle Extension (s)	3.0	2.0		3.0	2.0		2.0	2.0		2.0	2.0	
Lane Grp Cap (vph)	271	1069		129	764		480	1645		166	962	
v/s Ratio Prot	c0.11	c0.31		0.02	0.20		c0.23	0.47		0.04	0.29	
v/s Ratio Perm	0.25			0.14			c0.33			0.24		
v/c Ratio	0.94	0.99		0.60	0.87		0.99	0.99		0.80	0.97	
Uniform Delay, d1	27.6	37.6		33.2	40.7		33.0	28.5		29.1	38.1	
Progression Factor	0.79	0.79		1.00	1.00		1.12	0.83		1.00	1.00	
Incremental Delay, d2	33.3	21.7		7.2	10.3		30.1	14.4		22.4	21.7	
Delay (s)	55.1	51.3		40.5	51.0		67.1	37.9		51.5	59.8	
Level of Service	E	D		D	D		E	D		D	E	
Approach Delay (s)		52.1			49.9			44.5			58.8	
Approach LOS		D			D			D			E	

Intersection Summary			
HCM Average Control Delay	50.2	HCM Level of Service	D
HCM Volume to Capacity ratio	0.97		
Actuated Cycle Length (s)	110.0	Sum of lost time (s)	6.8
Intersection Capacity Utilization	102.1%	ICU Level of Service	G
Analysis Period (min)	15		
c Critical Lane Group			

Movement	EBL	EBT	EBR	WBL	WBT	WBR	NBL	NBT	NBR	SBL	SBT	SBR
Lane Configurations												
Ideal Flow (vphpl)	1900	1900	1900	1900	1900	1900	1900	1900	1900	1900	1900	1900
Total Lost time (s)		4.0		4.0	4.0		4.0	4.0		4.0	4.0	
Lane Util. Factor		0.91		1.00	0.95		1.00	1.00		1.00	1.00	
Frpb, ped/bikes		1.00		1.00	1.00		1.00	1.00		1.00	0.99	
Flpb, ped/bikes		1.00		1.00	1.00		0.98	1.00		1.00	1.00	
Frt		0.99		1.00	0.98		1.00	0.97		1.00	0.98	
Flt Protected		0.99		0.95	1.00		0.95	1.00		0.95	1.00	
Satd. Flow (prot)		5013		1768	3452		1737	1802		1770	1805	
Flt Permitted		0.66		0.21	1.00		0.26	1.00		0.11	1.00	
Satd. Flow (perm)		3311		389	3452		476	1802		213	1805	
Volume (vph)	160	858	40	93	1347	221	190	525	120	80	406	70
Peak-hour factor, PHF	0.98	0.98	0.98	0.98	0.98	0.98	0.98	0.98	0.98	0.98	0.98	0.98
Adj. Flow (vph)	163	876	41	95	1374	226	194	536	122	82	414	71
RTOR Reduction (vph)	0	5	0	0	15	0	0	9	0	0	7	0
Lane Group Flow (vph)	0	1075	0	95	1585	0	194	649	0	82	478	0
Confl. Peds. (#/hr)	24		4	4		24	48		12	12		48
Turn Type	Perm			Perm			Perm			Perm		
Protected Phases		4			8			2			6	
Permitted Phases	4			8			2			6		
Actuated Green, G (s)		46.0		46.0	46.0		34.0	34.0		34.0	34.0	
Effective Green, g (s)		47.0		47.0	47.0		35.0	35.0		35.0	35.0	
Actuated g/C Ratio		0.52		0.52	0.52		0.39	0.39		0.39	0.39	
Clearance Time (s)		5.0		5.0	5.0		5.0	5.0		5.0	5.0	
Vehicle Extension (s)		3.0		3.0	3.0		3.0	3.0		3.0	3.0	
Lane Grp Cap (vph)		1729		203	1803		185	701		83	702	
v/s Ratio Prot					c0.46			0.36			0.27	
v/s Ratio Perm		0.32		0.24			c0.41			0.39		
v/c Ratio		1.87dl		0.47	0.88		1.05	0.93		0.99	0.68	
Uniform Delay, d1		15.2		13.6	19.0		27.5	26.3		27.3	22.9	
Progression Factor		1.00		1.00	1.00		1.00	1.00		1.00	1.00	
Incremental Delay, d2		1.7		7.6	6.5		79.6	18.1		93.9	2.7	
Delay (s)		16.9		21.2	25.5		107.1	44.3		121.2	25.6	
Level of Service		B		C	C		F	D		F	C	
Approach Delay (s)		16.9			25.2			58.6			39.4	
Approach LOS		B			C			E			D	

Intersection Summary			
HCM Average Control Delay	31.8	HCM Level of Service	C
HCM Volume to Capacity ratio	0.95		
Actuated Cycle Length (s)	90.0	Sum of lost time (s)	8.0
Intersection Capacity Utilization	135.8%	ICU Level of Service	H
Analysis Period (min)	15		

dl Defacto Left Lane. Recode with 1 though lane as a left lane.
c Critical Lane Group

Movement	EBL	EBT	EBR	WBL	WBT	WBR	NBL	NBT	NBR	SBL	SBT	SBR
Lane Configurations												
Ideal Flow (vphpl)	1900	1900	1900	1900	1900	1900	1900	1900	1900	1900	1900	1900
Total Lost time (s)		3.4			3.4		3.4	3.4		3.4	3.4	
Lane Util. Factor		0.91			0.91		1.00	0.95		1.00	0.95	
Frpb, ped/bikes		1.00			0.99		1.00	0.99		1.00	0.99	
Flpb, ped/bikes		1.00			1.00		1.00	1.00		1.00	1.00	
Frt		0.99			0.96		1.00	0.99		1.00	0.98	
Flt Protected		0.98			1.00		0.95	1.00		0.95	1.00	
Satd. Flow (prot)		4916			4804		1768	3456		1770	3427	
Flt Permitted		0.69			0.69		0.13	1.00		0.12	1.00	
Satd. Flow (perm)		3461			3313		249	3456		227	3427	
Volume (vph)	387	695	111	110	1174	466	280	1206	110	206	626	111
Peak-hour factor, PHF	0.95	0.95	0.95	0.95	0.95	0.95	0.95	0.95	0.95	0.95	0.95	0.95
Adj. Flow (vph)	407	732	117	116	1236	491	295	1269	116	217	659	117
RTOR Reduction (vph)	0	10	0	0	59	0	0	6	0	0	13	0
Lane Group Flow (vph)	0	1246	0	0	1784	0	295	1379	0	217	763	0
Confl. Peds. (#/hr)	26		19			26	39		92	92		39
Turn Type	Perm			pm pt			pm pt			pm pt		
Protected Phases		4		3	8		5	2		1	6	
Permitted Phases	4			8			2			6		
Actuated Green, G (s)		51.0			51.0		51.0	40.0		39.7	32.2	
Effective Green, g (s)		51.6			51.6		51.6	40.6		40.4	32.8	
Actuated g/C Ratio		0.47			0.47		0.47	0.37		0.37	0.30	
Clearance Time (s)		4.0			4.0		3.5	4.0		3.5	4.0	
Vehicle Extension (s)		2.0			2.0		3.0	2.0		3.0	2.0	
Lane Grp Cap (vph)		1624			1554		329	1276		190	1022	
v/s Ratio Prot							c0.13	c0.40		c0.08	0.22	
v/s Ratio Perm		0.36			c0.54		0.29			0.34		
v/c Ratio		4.33dl			1.15		0.90	1.08		1.14	0.75	
Uniform Delay, d1		24.2			29.2		26.3	34.7		31.4	34.8	
Progression Factor		1.14			1.00		0.85	0.92		1.44	1.17	
Incremental Delay, d2		1.5			74.5		22.9	48.6		107.2	4.7	
Delay (s)		29.0			103.7		45.2	80.5		152.4	45.6	
Level of Service		C			F		D	F		F	D	
Approach Delay (s)		29.0			103.7			74.3			68.9	
Approach LOS		C			F			E			E	

Intersection Summary			
HCM Average Control Delay	72.9	HCM Level of Service	E
HCM Volume to Capacity ratio	1.09		
Actuated Cycle Length (s)	110.0	Sum of lost time (s)	6.8
Intersection Capacity Utilization	122.0%	ICU Level of Service	H
Analysis Period (min)	15		

dl Defacto Left Lane. Recode with 1 though lane as a left lane.
c Critical Lane Group

APPENDIX O:
EXISTING PLUS TOWER ALTERNATIVE
INTERSECTION LEVEL OF SERVICE CALCULATION WORKSHEETS

Movement	EBL	EBT	EBR	WBL	WBT	WBR	NBL	NBT	NBR	SBL	SBT	SBR
Lane Configurations												
Ideal Flow (vphpl)	1900	1900	1900	1900	1900	1900	1900	1900	1900	1900	1900	1900
Lane Width	12	12	12	12	12	12	16	16	16	16	16	16
Total Lost time (s)	4.0	4.0		4.0	4.0		2.0	2.0		2.0	2.0	
Lane Util. Factor	1.00	0.91		1.00	0.91		1.00	1.00		1.00	1.00	
Frpb, ped/bikes	1.00	0.99		1.00	0.99		1.00	0.99		1.00	0.98	
Flpb, ped/bikes	1.00	1.00		1.00	1.00		1.00	1.00		0.99	1.00	
Frt	1.00	0.98		1.00	0.98		1.00	0.98		1.00	0.93	
Flt Protected	0.95	1.00		0.95	1.00		0.95	1.00		0.95	1.00	
Satd. Flow (prot)	1770	4922		1770	4965		2006	2049		1984	1927	
Flt Permitted	0.95	1.00		0.95	1.00		0.11	1.00		0.46	1.00	
Satd. Flow (perm)	1770	4922		1770	4965		222	2049		962	1927	
Volume (vph)	288	907	176	65	1219	165	206	270	50	146	278	246
Peak-hour factor, PHF	0.95	0.95	0.95	0.95	0.95	0.95	0.95	0.95	0.95	0.95	0.95	0.95
Adj. Flow (vph)	303	955	185	68	1283	174	217	284	53	154	293	259
RTOR Reduction (vph)	0	20	0	0	14	0	0	6	0	0	28	0
Lane Group Flow (vph)	303	1120	0	68	1443	0	217	331	0	154	524	0
Confl. Peds. (#/hr)			10	10		10	10		10	10		10
Turn Type	Prot			Prot			pm+pt			Perm		
Protected Phases	7	4		3	8		5	2			6	
Permitted Phases							2			6		
Actuated Green, G (s)	17.0	56.4		8.6	48.0		44.5	44.5		35.5	35.5	
Effective Green, g (s)	17.0	56.4		8.6	48.0		45.0	45.0		36.0	36.0	
Actuated g/C Ratio	0.14	0.47		0.07	0.40		0.38	0.38		0.30	0.30	
Clearance Time (s)	4.0	4.0		4.0	4.0		4.0	2.5		2.5	2.5	
Vehicle Extension (s)	3.0	3.0		3.0	3.0		3.0	3.0		3.0	3.0	
Lane Grp Cap (vph)	251	2313		127	1986		187	768		289	578	
v/s Ratio Prot	c0.17	0.23		0.04	c0.29		c0.07	0.16			c0.27	
v/s Ratio Perm							0.37			0.16		
v/c Ratio	1.21	0.48		0.54	0.73		1.16	0.43		0.53	0.91	
Uniform Delay, d1	51.5	21.8		53.8	30.5		33.9	28.0		35.0	40.4	
Progression Factor	1.00	1.00		1.00	1.00		1.00	1.00		1.00	1.00	
Incremental Delay, d2	124.5	0.7		4.3	2.4		115.7	0.4		1.9	17.8	
Delay (s)	176.0	22.5		58.1	32.8		149.5	28.4		36.9	58.2	
Level of Service	F	C		E	C		F	C		D	E	
Approach Delay (s)		54.8			33.9			75.8			53.6	
Approach LOS		D			C			E			D	

Intersection Summary			
HCM Average Control Delay	49.8	HCM Level of Service	D
HCM Volume to Capacity ratio	0.88		
Actuated Cycle Length (s)	120.0	Sum of lost time (s)	12.0
Intersection Capacity Utilization	98.2%	ICU Level of Service	F
Analysis Period (min)	15		

c Critical Lane Group

Movement	EBL	EBT	EBR	WBL	WBT	WBR	NBL	NBT	NBR	SBL	SBT	SBR
Lane Configurations												
Ideal Flow (vphpl)	1900	1900	1900	1900	1900	1900	1900	1900	1900	1900	1900	1900
Total Lost time (s)		4.0		4.0	4.0			4.0		4.0	4.0	
Lane Util. Factor		1.00		0.95	0.95			0.95		1.00	0.95	
Frpb, ped/bikes		1.00		1.00	0.99			0.99		1.00	0.96	
Flpb, ped/bikes		1.00		1.00	1.00			1.00		1.00	1.00	
Frt		0.94		1.00	0.92			0.97		1.00	0.95	
Flt Protected		0.97		0.95	1.00			1.00		0.95	1.00	
Satd. Flow (prot)		1696		1681	1607			3405		1770	3203	
Flt Permitted		0.80		0.75	1.00			0.94		0.95	1.00	
Satd. Flow (perm)		1402		1321	1607			3215		1770	3203	
Volume (vph)	8	0	7	113	95	119	10	987	231	72	664	358
Peak-hour factor, PHF	0.93	0.93	0.93	0.93	0.93	0.93	0.93	0.93	0.93	0.93	0.93	0.93
Adj. Flow (vph)	9	0	8	122	102	128	11	1061	248	77	714	385
RTOR Reduction (vph)	0	8	0	0	61	0	0	15	0	0	49	0
Lane Group Flow (vph)	0	9	0	122	169	0	0	1305	0	77	1050	0
Confl. Peds. (#/hr)	4					4	44		12	12		44
Turn Type	Perm			Perm			Perm			Prot		
Protected Phases		7			8			2		1	6	
Permitted Phases	7			8			2					
Actuated Green, G (s)		3.3		13.0	13.0			48.7		7.0	60.2	
Effective Green, g (s)		3.8		13.5	13.5			49.2		7.5	60.7	
Actuated g/C Ratio		0.04		0.15	0.15			0.55		0.08	0.67	
Clearance Time (s)		4.5		4.5	4.5			4.5		4.5	4.5	
Vehicle Extension (s)		2.0		2.0	2.0			2.0		2.0	2.0	
Lane Grp Cap (vph)		59		198	241			1758		148	2160	
v/s Ratio Prot										0.04	c0.33	
v/s Ratio Perm		c0.01		0.09	0.11			c0.41				
v/c Ratio		0.16		0.62	0.70			0.74		0.52	0.49	
Uniform Delay, d1		41.6		35.8	36.3			15.6		39.5	7.1	
Progression Factor		1.00		1.00	1.00			1.03		1.00	1.00	
Incremental Delay, d2		0.5		4.0	7.3			1.5		1.5	0.8	
Delay (s)		42.0		39.8	43.6			17.5		41.0	7.9	
Level of Service		D		D	D			B		D	A	
Approach Delay (s)		42.0			42.3			17.5			10.1	
Approach LOS		D			D			B			B	

Intersection Summary			
HCM Average Control Delay	17.7	HCM Level of Service	B
HCM Volume to Capacity ratio	0.69		
Actuated Cycle Length (s)	90.0	Sum of lost time (s)	16.0
Intersection Capacity Utilization	77.7%	ICU Level of Service	D
Analysis Period (min)	15		

c Critical Lane Group

Movement	EBL	EBT	EBR	WBL	WBT	WBR	NBL	NBT	NBR	SBL	SBT	SBR
Lane Configurations												
Ideal Flow (vphpl)	1900	1900	1900	1900	1900	1900	1900	1900	1900	1900	1900	1900
Total Lost time (s)	4.0	4.0		4.0	4.0		4.0	4.0		4.0	4.0	
Lane Util. Factor	0.97	0.95		1.00	0.95		1.00	0.95		1.00	0.95	
Frpb, ped/bikes	1.00	0.99		1.00	1.00		1.00	0.99		1.00	0.98	
Flpb, ped/bikes	1.00	1.00		1.00	1.00		1.00	1.00		1.00	1.00	
Frt	1.00	0.98		1.00	0.96		1.00	0.98		1.00	0.97	
Flt Protected	0.95	1.00		0.95	1.00		0.95	1.00		0.95	1.00	
Satd. Flow (prot)	3433	3432		1770	3398		1770	3441		1770	3354	
Flt Permitted	0.95	1.00		0.95	1.00		0.95	1.00		0.95	1.00	
Satd. Flow (perm)	3433	3432		1770	3398		1770	3441		1770	3354	
Volume (vph)	450	533	86	101	677	209	107	595	99	140	510	143
Peak-hour factor, PHF	0.96	0.96	0.96	0.96	0.96	0.96	0.96	0.96	0.96	0.96	0.96	0.96
Adj. Flow (vph)	469	555	90	105	705	218	111	620	103	146	531	149
RTOR Reduction (vph)	0	14	0	0	32	0	0	14	0	0	27	0
Lane Group Flow (vph)	469	631	0	105	891	0	111	709	0	146	653	0
Confl. Peds. (#/hr)	6		24	24		6	36		28	28		36
Turn Type	Prot			Prot			Prot			Prot		
Protected Phases	7	4		3	8		5	2		1	6	
Permitted Phases												
Actuated Green, G (s)	13.0	30.6		7.9	25.5		8.0	24.4		10.1	26.5	
Effective Green, g (s)	12.5	31.6		7.4	26.5		7.5	25.4		9.6	27.5	
Actuated g/C Ratio	0.14	0.35		0.08	0.29		0.08	0.28		0.11	0.31	
Clearance Time (s)	3.5	5.0		3.5	5.0		3.5	5.0		3.5	5.0	
Vehicle Extension (s)	2.0	2.0		2.0	2.0		2.0	2.0		2.0	2.0	
Lane Grp Cap (vph)	477	1205		146	1001		148	971		189	1025	
v/s Ratio Prot	c0.14	0.18		0.06	c0.26		0.06	c0.21		c0.08	0.19	
v/s Ratio Perm												
v/c Ratio	0.98	0.52		0.72	0.89		0.75	0.73		0.77	0.64	
Uniform Delay, d1	38.6	23.2		40.3	30.4		40.3	29.2		39.1	26.9	
Progression Factor	1.00	1.00		1.00	1.00		1.00	1.00		1.12	0.82	
Incremental Delay, d2	36.5	0.2		13.2	9.5		17.1	4.8		14.5	2.7	
Delay (s)	75.2	23.4		53.4	39.9		57.4	34.0		58.2	24.9	
Level of Service	E	C		D	D		E	C		E	C	
Approach Delay (s)		45.2			41.3			37.1			30.8	
Approach LOS		D			D			D			C	

Intersection Summary			
HCM Average Control Delay	39.2	HCM Level of Service	D
HCM Volume to Capacity ratio	0.83		
Actuated Cycle Length (s)	90.0	Sum of lost time (s)	16.0
Intersection Capacity Utilization	79.4%	ICU Level of Service	D
Analysis Period (min)	15		

c Critical Lane Group

Movement	EBL	EBT	EBR	WBL	WBT	WBR	NBL	NBT	NBR	SBL	SBT	SBR
Lane Configurations												
Ideal Flow (vphpl)	1900	1900	1900	1900	1900	1900	1900	1900	1900	1900	1900	1900
Total Lost time (s)		4.0						4.0		4.0	4.0	
Lane Util. Factor		1.00						0.95		0.97	0.95	
Frt		0.86						0.93		1.00	0.97	
Flt Protected		1.00						1.00		0.95	1.00	
Satd. Flow (prot)		1611						3284		3433	3447	
Flt Permitted		1.00						0.95		0.95	1.00	
Satd. Flow (perm)		1611						3115		3433	3447	
Volume (vph)	0	0	7	0	0	0	7	323	302	1585	269	56
Peak-hour factor, PHF	0.92	0.92	0.92	0.92	0.92	0.92	0.92	0.92	0.92	0.92	0.92	0.92
Adj. Flow (vph)	0	0	8	0	0	0	8	351	328	1723	292	61
RTOR Reduction (vph)	0	8	0	0	0	0	0	24	0	0	0	0
Lane Group Flow (vph)	0	0	0	0	0	0	0	663	0	1723	353	0
Turn Type										Prot		
Protected Phases								2		1	6	
Permitted Phases												
Actuated Green, G (s)		0.0						8.0		29.0	45.0	
Effective Green, g (s)		0.0						8.0		29.0	45.0	
Actuated g/C Ratio		0.00						0.18		0.64	1.00	
Clearance Time (s)								4.0		4.0	2.0	
Lane Grp Cap (vph)		0						554		2212	3447	
v/s Ratio Prot										c0.50	0.10	
v/s Ratio Perm								c0.21				
v/c Ratio		0.00						11.31dr		0.78	0.10	
Uniform Delay, d1		22.5						18.5		5.7	0.0	
Progression Factor		1.00						0.75		1.00	1.00	
Incremental Delay, d2		0.0						104.4		2.8	0.1	
Delay (s)		22.5						118.3		8.5	0.1	
Level of Service		C						F		A	A	
Approach Delay (s)		22.5			0.0			118.3			7.1	
Approach LOS		C			A			F			A	

Intersection Summary			
HCM Average Control Delay	34.7	HCM Level of Service	C
HCM Volume to Capacity ratio	0.87		
Actuated Cycle Length (s)	45.0	Sum of lost time (s)	8.0
Intersection Capacity Utilization	77.4%	ICU Level of Service	D
Analysis Period (min)	15		

dr Defacto Right Lane. Recode with 1 though lane as a right lane.

c Critical Lane Group

Movement	EBL	EBT	EBR	WBL	WBT	WBR	NBL	NBT	NBR	SBL	SBT	SBR
Lane Configurations												
Ideal Flow (vphpl)	1900	1900	1900	1900	1900	1900	1900	1900	1900	1900	1900	1900
Total Lost time (s)		4.0			4.0			4.0			4.0	
Lane Util. Factor		1.00			1.00			0.95			0.95	
Frpb, ped/bikes		0.97			0.96			0.98			0.99	
Flpb, ped/bikes		0.97			0.97			1.00			1.00	
Frt		0.98			0.94			0.98			0.99	
Flt Protected		0.98			0.98			1.00			1.00	
Satd. Flow (prot)		1672			1596			3394			3459	
Flt Permitted		0.80			0.88			0.92			0.88	
Satd. Flow (perm)		1363			1419			3146			3046	
Volume (vph)	69	50	25	51	44	72	24	474	80	41	423	28
Peak-hour factor, PHF	0.90	0.90	0.90	0.90	0.90	0.90	0.90	0.90	0.90	0.90	0.90	0.90
Adj. Flow (vph)	77	56	28	57	49	80	27	527	89	46	470	31
RTOR Reduction (vph)	0	17	0	0	53	0	0	29	0	0	10	0
Lane Group Flow (vph)	0	144	0	0	133	0	0	614	0	0	537	0
Confl. Peds. (#/hr)	100		100	100		100	100		100	100		100
Turn Type	Perm			Perm			Perm			Perm		
Protected Phases		4			8			2			6	
Permitted Phases	4			8			2			6		
Actuated Green, G (s)		15.0			15.0			22.0			22.0	
Effective Green, g (s)		15.0			15.0			22.0			22.0	
Actuated g/C Ratio		0.33			0.33			0.49			0.49	
Clearance Time (s)		4.0			4.0			4.0			4.0	
Lane Grp Cap (vph)		454			473			1538			1489	
v/s Ratio Prot												
v/s Ratio Perm		c0.11			0.09			c0.20			0.18	
v/c Ratio		0.32			0.28			0.40			0.36	
Uniform Delay, d1		11.2			11.0			7.3			7.1	
Progression Factor		1.00			1.00			1.00			1.00	
Incremental Delay, d2		1.8			1.5			0.8			0.7	
Delay (s)		13.0			12.5			8.1			7.8	
Level of Service		B			B			A			A	
Approach Delay (s)		13.0			12.5			8.1			7.8	
Approach LOS		B			B			A			A	

Intersection Summary			
HCM Average Control Delay	9.0	HCM Level of Service	A
HCM Volume to Capacity ratio	0.37		
Actuated Cycle Length (s)	45.0	Sum of lost time (s)	8.0
Intersection Capacity Utilization	60.6%	ICU Level of Service	B
Analysis Period (min)	15		
c Critical Lane Group			

Movement	EBL	EBT	EBR	WBL	WBT	WBR	NBL	NBT	NBR	SBL	SBT	SBR
Lane Configurations												
Ideal Flow (vphpl)	1900	1900	1900	1900	1900	1900	1900	1900	1900	1900	1900	1900
Total Lost time (s)		4.0			4.0			4.0			4.0	
Lane Util. Factor		1.00			1.00			0.95			0.91	
Frpb, ped/bikes		0.96			0.96			0.99			0.98	
Flpb, ped/bikes		0.97			0.98			1.00			1.00	
Frt		0.96			0.96			0.99			0.99	
Flt Protected		0.99			0.99			1.00			1.00	
Satd. Flow (prot)		1641			1658			3456			4887	
Flt Permitted		0.82			0.83			0.91			0.81	
Satd. Flow (perm)		1366			1392			3135			3976	
Volume (vph)	51	74	52	29	57	36	22	949	47	61	992	83
Peak-hour factor, PHF	0.90	0.90	0.90	0.90	0.90	0.90	0.90	0.90	0.90	0.90	0.90	0.90
Adj. Flow (vph)	57	82	58	32	63	40	24	1054	52	68	1102	92
RTOR Reduction (vph)	0	24	0	0	25	0	0	2	0	0	5	0
Lane Group Flow (vph)	0	173	0	0	110	0	0	1128	0	0	1257	0
Confl. Peds. (#/hr)	100		100	100		100	100		100	100		100
Turn Type	Perm			Perm			Perm			Perm		
Protected Phases		4			4			2			6	
Permitted Phases	4			4			2			6		
Actuated Green, G (s)		13.1			13.1			62.9			62.9	
Effective Green, g (s)		13.6			13.6			63.4			63.4	
Actuated g/C Ratio		0.16			0.16			0.75			0.75	
Clearance Time (s)		4.5			4.5			4.5			4.5	
Vehicle Extension (s)		2.0			2.0			2.0			2.0	
Lane Grp Cap (vph)		219			223			2338			2966	
v/s Ratio Prot												
v/s Ratio Perm		c0.13			0.08			c0.36			0.32	
v/c Ratio		0.79			0.49			0.48			0.42	
Uniform Delay, d1		34.3			32.6			4.3			4.0	
Progression Factor		1.00			1.00			1.00			1.00	
Incremental Delay, d2		15.8			0.6			0.7			0.4	
Delay (s)		50.1			33.2			5.0			4.5	
Level of Service		D			C			A			A	
Approach Delay (s)		50.1			33.2			5.0			4.5	
Approach LOS		D			C			A			A	

Intersection Summary			
HCM Average Control Delay	9.4	HCM Level of Service	A
HCM Volume to Capacity ratio	0.54		
Actuated Cycle Length (s)	85.0	Sum of lost time (s)	8.0
Intersection Capacity Utilization	88.8%	ICU Level of Service	E
Analysis Period (min)	15		
c Critical Lane Group			

Movement	EBL	EBT	EBR	WBL	WBT	WBR	NBL	NBT	NBR	SBL	SBT	SBR
Lane Configurations												
Ideal Flow (vphpl)	1900	1900	1900	1900	1900	1900	1900	1900	1900	1900	1900	1900
Total Lost time (s)	4.0	4.0		4.0	4.0		4.0	4.0		4.0	4.0	
Lane Util. Factor	1.00	0.95		1.00	0.95		1.00	1.00		1.00	1.00	
Frpb, ped/bikes	1.00	1.00		1.00	0.99		1.00	0.99		1.00	1.00	
Flpb, ped/bikes	0.98	1.00		0.99	1.00		1.00	1.00		0.98	1.00	
Frt	1.00	0.98		1.00	0.99		1.00	0.98		1.00	0.99	
Flt Protected	0.95	1.00		0.95	1.00		0.95	1.00		0.95	1.00	
Satd. Flow (prot)	1732	3476		1757	3470		1766	1812		1734	1841	
Flt Permitted	0.31	1.00		0.47	1.00		0.62	1.00		0.63	1.00	
Satd. Flow (perm)	570	3476		860	3470		1145	1812		1147	1841	
Volume (vph)	19	301	35	29	456	44	82	160	27	88	187	15
Peak-hour factor, PHF	0.91	0.91	0.91	0.91	0.91	0.91	0.91	0.91	0.91	0.91	0.91	0.91
Adj. Flow (vph)	21	331	38	32	501	48	90	176	30	97	205	16
RTOR Reduction (vph)	0	11	0	0	9	0	0	8	0	0	3	0
Lane Group Flow (vph)	21	358	0	32	540	0	90	198	0	97	218	0
Confl. Peds. (#/hr)	30		12	12		30	6		54	54		6
Turn Type	Perm			Perm			Perm			Perm		
Protected Phases		4			8			2			6	
Permitted Phases	4			8			2			6		
Actuated Green, G (s)	24.0	24.0		24.0	24.0		49.5	49.5		49.5	49.5	
Effective Green, g (s)	23.0	23.0		23.0	23.0		49.0	49.0		49.0	49.0	
Actuated g/C Ratio	0.29	0.29		0.29	0.29		0.61	0.61		0.61	0.61	
Clearance Time (s)	3.0	3.0		3.0	3.0		3.5	3.5		3.5	3.5	
Lane Grp Cap (vph)	164	999		247	998		701	1110		703	1128	
v/s Ratio Prot		0.10			c0.16			0.11			c0.12	
v/s Ratio Perm	0.04			0.04			0.08			0.08		
v/c Ratio	0.13	0.36		0.13	0.54		0.13	0.18		0.14	0.19	
Uniform Delay, d1	21.1	22.6		21.1	24.0		6.5	6.7		6.6	6.8	
Progression Factor	1.00	1.00		0.91	0.97		1.00	1.00		1.00	1.00	
Incremental Delay, d2	1.6	1.0		1.1	2.1		0.4	0.4		0.4	0.4	
Delay (s)	22.7	23.6		20.2	25.5		6.9	7.1		7.0	7.2	
Level of Service	C	C		C	C		A	A		A	A	
Approach Delay (s)		23.6			25.2			7.0			7.1	
Approach LOS		C			C			A			A	

Intersection Summary			
HCM Average Control Delay	17.8	HCM Level of Service	B
HCM Volume to Capacity ratio	0.30		
Actuated Cycle Length (s)	80.0	Sum of lost time (s)	8.0
Intersection Capacity Utilization	79.0%	ICU Level of Service	D
Analysis Period (min)	15		
c Critical Lane Group			

Movement	EBL	EBT	EBR	WBL	WBT	WBR	NBL	NBT	NBR	SBL	SBT	SBR
Lane Configurations												
Ideal Flow (vphpl)	1900	1900	1900	1900	1900	1900	1900	1900	1900	1900	1900	1900
Total Lost time (s)	4.0	4.0		4.0	4.0			4.0			4.0	
Lane Util. Factor	1.00	0.95		1.00	0.95			0.95			0.95	
Frpb, ped/bikes	1.00	0.99		1.00	1.00			0.99			1.00	
Flpb, ped/bikes	0.99	1.00		0.98	1.00			1.00			1.00	
Frt	1.00	0.98		1.00	0.99			0.97			0.97	
Flt Protected	0.95	1.00		0.95	1.00			0.99			0.99	
Satd. Flow (prot)	1759	3460		1736	3517			3354			3372	
Flt Permitted	0.43	1.00		0.47	1.00			0.85			0.89	
Satd. Flow (perm)	802	3460		851	3517			2881			3045	
Volume (vph)	15	377	48	34	457	17	61	101	45	20	66	25
Peak-hour factor, PHF	0.95	0.95	0.95	0.95	0.95	0.95	0.95	0.95	0.95	0.95	0.95	0.95
Adj. Flow (vph)	16	397	51	36	481	18	64	106	47	21	69	26
RTOR Reduction (vph)	0	12	0	0	3	0	0	28	0	0	15	0
Lane Group Flow (vph)	16	436	0	36	496	0	0	189	0	0	101	0
Confl. Peds. (#/hr)	18		54	54		18	4		18	18		4
Turn Type	Perm			Perm			Perm			Perm		
Protected Phases		4			8			2			6	
Permitted Phases	4			8			2			6		
Actuated Green, G (s)	38.0	38.0		38.0	38.0			32.0			32.0	
Effective Green, g (s)	39.0	39.0		39.0	39.0			33.0			33.0	
Actuated g/C Ratio	0.49	0.49		0.49	0.49			0.41			0.41	
Clearance Time (s)	5.0	5.0		5.0	5.0			5.0			5.0	
Lane Grp Cap (vph)	391	1687		415	1715			1188			1256	
v/s Ratio Prot		0.13			c0.14							
v/s Ratio Perm	0.02			0.04				c0.07			0.03	
v/c Ratio	0.04	0.26		0.09	0.29			0.16			0.08	
Uniform Delay, d1	10.7	12.0		11.0	12.2			14.8			14.3	
Progression Factor	0.91	1.04		1.38	1.43			0.40			1.00	
Incremental Delay, d2	0.2	0.4		0.4	0.4			0.3			0.1	
Delay (s)	10.0	12.9		15.5	18.0			6.2			14.4	
Level of Service	A	B		B	B			A			B	
Approach Delay (s)		12.8			17.8			6.2			14.4	
Approach LOS		B			B			A			B	

Intersection Summary			
HCM Average Control Delay	13.9	HCM Level of Service	B
HCM Volume to Capacity ratio	0.23		
Actuated Cycle Length (s)	80.0	Sum of lost time (s)	8.0
Intersection Capacity Utilization	54.1%	ICU Level of Service	A
Analysis Period (min)	15		
c Critical Lane Group			

Movement	EBL	EBT	EBR	WBL	WBT	WBR	NBL	NBT	NBR	SBL	SBT	SBR
Lane Configurations												
Ideal Flow (vphpl)	1900	1900	1900	1900	1900	1900	1900	1900	1900	1900	1900	1900
Total Lost time (s)	4.0	4.0		4.0	4.0			4.0			4.0	
Lane Util. Factor	1.00	0.95		1.00	0.95			0.95			0.95	
Frpb, ped/bikes	1.00	1.00		1.00	0.99			0.99			1.00	
Flpb, ped/bikes	0.99	1.00		0.98	1.00			1.00			1.00	
Frt	1.00	0.99		1.00	0.97			0.97			0.99	
Flt Protected	0.95	1.00		0.95	1.00			1.00			0.99	
Satd. Flow (prot)	1760	3496		1729	3399			3396			3435	
Flt Permitted	0.40	1.00		0.48	1.00			0.90			0.81	
Satd. Flow (perm)	745	3496		875	3399			3087			2819	
Volume (vph)	31	390	25	90	421	117	30	226	62	71	217	29
Peak-hour factor, PHF	0.96	0.96	0.96	0.96	0.96	0.96	0.96	0.96	0.96	0.96	0.96	0.96
Adj. Flow (vph)	32	406	26	94	439	122	31	235	65	74	226	30
RTOR Reduction (vph)	0	6	0	0	32	0	0	27	0	0	9	0
Lane Group Flow (vph)	32	426	0	94	529	0	0	304	0	0	321	0
Confl. Peds. (#/hr)	13		71	71		13	22		22	22		22
Turn Type	Perm			Perm			Perm			Perm		
Protected Phases		4			8			2			6	
Permitted Phases	4			8			2			6		
Actuated Green, G (s)	41.5	41.5		41.5	41.5			32.0			32.0	
Effective Green, g (s)	41.0	41.0		41.0	41.0			31.0			31.0	
Actuated g/C Ratio	0.51	0.51		0.51	0.51			0.39			0.39	
Clearance Time (s)	3.5	3.5		3.5	3.5			3.0			3.0	
Lane Grp Cap (vph)	382	1792		448	1742			1196			1092	
v/s Ratio Prot		0.12			c0.16							
v/s Ratio Perm	0.04			0.11				0.10			c0.11	
v/c Ratio	0.08	0.24		0.21	0.30			0.25			0.29	
Uniform Delay, d1	9.9	10.8		10.7	11.3			16.6			16.9	
Progression Factor	1.33	1.43		1.00	1.00			0.70			1.00	
Incremental Delay, d2	0.4	0.3		1.1	0.5			0.5			0.7	
Delay (s)	13.6	15.7		11.7	11.7			12.2			17.6	
Level of Service	B	B		B	B			B			B	
Approach Delay (s)		15.6			11.7			12.2			17.6	
Approach LOS		B			B			B			B	

Intersection Summary			
HCM Average Control Delay	13.9	HCM Level of Service	B
HCM Volume to Capacity ratio	0.30		
Actuated Cycle Length (s)	80.0	Sum of lost time (s)	8.0
Intersection Capacity Utilization	101.7%	ICU Level of Service	G
Analysis Period (min)	15		
c Critical Lane Group			

Movement	EBT	EBR	WBL	WBT	NBL	NBR
Lane Configurations						
Ideal Flow (vphpl)	1900	1900	1900	1900	1900	1900
Total Lost time (s)	4.0		4.0	4.0	4.0	
Lane Util. Factor	0.95		1.00	0.95	1.00	
Frpb, ped/bikes	0.91		1.00	1.00	1.00	
Flpb, ped/bikes	1.00		1.00	1.00	1.00	
Frt	0.97		1.00	1.00	0.97	
Flt Protected	1.00		0.95	1.00	0.96	
Satd. Flow (prot)	3117		1770	3539	1734	
Flt Permitted	1.00		0.95	1.00	0.96	
Satd. Flow (perm)	3117		1770	3539	1734	
Volume (vph)	432	97	73	501	129	44
Peak-hour factor, PHF	0.91	0.91	0.91	0.91	0.91	0.91
Adj. Flow (vph)	475	107	80	551	142	48
RTOR Reduction (vph)	0	0	0	0	0	0
Lane Group Flow (vph)	582	0	80	551	190	0
Confl. Peds. (#/hr)		146	266			
Turn Type			Prot			
Protected Phases	4		3	8	2	
Permitted Phases						
Actuated Green, G (s)	50.4		8.1	62.5	14.5	
Effective Green, g (s)	50.4		8.1	62.5	14.5	
Actuated g/C Ratio	0.59		0.10	0.74	0.17	
Clearance Time (s)	4.0		4.0	4.0	4.0	
Vehicle Extension (s)	3.0		3.0	3.0	3.0	
Lane Grp Cap (vph)	1848		169	2602	296	
v/s Ratio Prot	c0.19		c0.05	0.16	c0.11	
v/s Ratio Perm						
v/c Ratio	0.31		0.47	0.21	0.64	
Uniform Delay, d1	8.7		36.4	3.5	32.8	
Progression Factor	1.00		1.21	0.71	0.97	
Incremental Delay, d2	0.4		1.7	0.2	4.7	
Delay (s)	9.1		45.7	2.7	36.5	
Level of Service	A		D	A	D	
Approach Delay (s)	9.1			8.1	36.5	
Approach LOS	A			A	D	

Intersection Summary			
HCM Average Control Delay	12.4	HCM Level of Service	B
HCM Volume to Capacity ratio	0.40		
Actuated Cycle Length (s)	85.0	Sum of lost time (s)	12.0
Intersection Capacity Utilization	40.2%	ICU Level of Service	A
Analysis Period (min)	15		
c Critical Lane Group			

Movement	EBL	EBT	EBR	WBL	WBT	WBR	NBL	NBT	NBR	SBL	SBT	SBR
Lane Configurations												
Ideal Flow (vphpl)	1900	1900	1900	1900	1900	1900	1900	1900	1900	1900	1900	1900
Total Lost time (s)	4.0	4.0		4.0	4.0		4.0	4.0		4.0	4.0	
Lane Util. Factor	1.00	0.95		1.00	0.95		1.00	0.95		1.00	0.95	
Frpb, ped/bikes	1.00	0.97		1.00	0.97		1.00	0.99		1.00	0.98	
Flpb, ped/bikes	0.93	1.00		0.92	1.00		1.00	1.00		1.00	1.00	
Frt	1.00	0.98		1.00	0.98		1.00	0.99		1.00	0.97	
Flt Protected	0.95	1.00		0.95	1.00		0.95	1.00		0.95	1.00	
Satd. Flow (prot)	1651	3362		1630	3370		1770	3451		1770	3369	
Flt Permitted	0.31	1.00		0.33	1.00		0.95	1.00		0.95	1.00	
Satd. Flow (perm)	541	3362		560	3370		1770	3451		1770	3369	
Volume (vph)	68	346	62	53	357	64	95	457	45	78	556	124
Peak-hour factor, PHF	0.90	0.90	0.90	0.90	0.90	0.90	0.90	0.90	0.90	0.90	0.90	0.90
Adj. Flow (vph)	76	384	69	59	397	71	106	508	50	87	618	138
RTOR Reduction (vph)	0	20	0	0	20	0	0	6	0	0	17	0
Lane Group Flow (vph)	76	433	0	59	448	0	106	552	0	87	739	0
Confl. Peds. (#/hr)	72		137	137		72			58	58		92
Turn Type	Perm			Perm			Prot			Prot		
Protected Phases		4			8		5	2		1	6	
Permitted Phases	4			8								
Actuated Green, G (s)	17.9	17.9		17.9	17.9		8.4	46.2		7.4	45.2	
Effective Green, g (s)	18.4	18.4		18.4	18.4		8.9	46.7		7.9	45.7	
Actuated g/C Ratio	0.22	0.22		0.22	0.22		0.10	0.55		0.09	0.54	
Clearance Time (s)	4.5	4.5		4.5	4.5		4.5	4.5		4.5	4.5	
Vehicle Extension (s)	2.0	2.0		2.0	2.0		2.0	2.0		2.0	2.0	
Lane Grp Cap (vph)	117	728		121	730		185	1896		165	1811	
v/s Ratio Prot		0.13			0.13		c0.06	0.16		0.05	c0.22	
v/s Ratio Perm	c0.14			0.11								
v/c Ratio	0.65	0.60		0.49	0.61		0.57	0.29		0.53	0.41	
Uniform Delay, d1	30.4	30.0		29.2	30.1		36.2	10.3		36.8	11.6	
Progression Factor	0.90	0.88		1.00	1.00		1.25	1.09		1.00	1.00	
Incremental Delay, d2	8.6	0.8		1.1	1.1		2.6	0.4		1.4	0.7	
Delay (s)	36.1	27.3		30.3	31.2		47.8	11.5		38.2	12.3	
Level of Service	D	C		C	C		D	B		D	B	
Approach Delay (s)		28.6			31.1			17.3			15.0	
Approach LOS		C			C			B			B	

Intersection Summary			
HCM Average Control Delay	21.7	HCM Level of Service	C
HCM Volume to Capacity ratio	0.49		
Actuated Cycle Length (s)	85.0	Sum of lost time (s)	12.0
Intersection Capacity Utilization	59.8%	ICU Level of Service	B
Analysis Period (min)	15		

c Critical Lane Group

Movement	WBL	WBR	NBT	NBR	SBL	SBT
Lane Configurations						
Sign Control	Stop		Free			Free
Grade	0%		0%			0%
Volume (veh/h)	11	35	583	9	15	698
Peak Hour Factor	0.90	0.90	0.90	0.90	0.90	0.90
Hourly flow rate (vph)	12	39	648	10	17	776
Pedestrians	34		33			34
Lane Width (ft)	12.0		12.0			12.0
Walking Speed (ft/s)	4.0		4.0			4.0
Percent Blockage	3		3			3
Right turn flare (veh)						
Median type	None					
Median storage veh)						
Upstream signal (ft)			230			471
pX, platoon unblocked	0.95	0.97			0.97	
vC, conflicting volume	1141	397			692	
vC1, stage 1 conf vol						
vC2, stage 2 conf vol						
vCu, unblocked vol	1011	350			653	
tC, single (s)	6.8	6.9			4.1	
tC, 2 stage (s)						
tF (s)	3.5	3.3			2.2	
p0 queue free %	94	93			98	
cM capacity (veh/h)	209	593			877	

Direction, Lane #	WB 1	NB 1	NB 2	SB 1	SB 2	SB 3
Volume Total	51	432	226	17	388	388
Volume Left	12	0	0	17	0	0
Volume Right	39	0	10	0	0	0
cSH	412	1700	1700	877	1700	1700
Volume to Capacity	0.12	0.25	0.13	0.02	0.23	0.23
Queue Length 95th (ft)	11	0	0	1	0	0
Control Delay (s)	15.0	0.0	0.0	9.2	0.0	0.0
Lane LOS	B			A		
Approach Delay (s)	15.0	0.0		0.2		
Approach LOS	B					

Intersection Summary			
Average Delay	0.6		
Intersection Capacity Utilization	36.6%	ICU Level of Service	A
Analysis Period (min)	15		

Movement	EBL	EBT	EBR	WBL	WBT	WBR	NBL	NBT	NBR	SBL	SBT	SBR
Lane Configurations												
Ideal Flow (vphpl)	1900	1900	1900	1900	1900	1900	1900	1900	1900	1900	1900	1900
Total Lost time (s)		4.0		4.0	4.0			4.0		4.0	4.0	
Lane Util. Factor		0.91		1.00	0.95			1.00		1.00	1.00	
Frpb, ped/bikes		1.00		1.00	1.00			0.99		1.00	1.00	
Flpb, ped/bikes		1.00		0.99	1.00			1.00		0.97	1.00	
Frt		0.99		1.00	0.97			0.98		1.00	0.99	
Flt Protected		0.99		0.95	1.00			0.99		0.95	1.00	
Satd. Flow (prot)		4986		1754	3420			1775		1725	1842	
Flt Permitted		0.88		0.53	1.00			0.88		0.44	1.00	
Satd. Flow (perm)		4406		975	3420			1577		799	1842	
Volume (vph)	34	273	25	52	279	67	58	175	49	64	189	12
Peak-hour factor, PHF	0.92	0.92	0.92	0.92	0.92	0.92	0.92	0.92	0.92	0.92	0.92	0.92
Adj. Flow (vph)	37	297	27	57	303	73	63	190	53	70	205	13
RTOR Reduction (vph)	0	10	0	0	25	0	0	9	0	0	3	0
Lane Group Flow (vph)	0	351	0	57	351	0	0	297	0	70	215	0
Confl. Peds. (#/hr)	24		18	18		24	24		48	48		24
Turn Type	Perm			Perm			Perm			Perm		
Protected Phases		4			8			2			6	
Permitted Phases	4			8			2			6		
Actuated Green, G (s)		51.0		51.0	51.0			24.0		24.0	24.0	
Effective Green, g (s)		52.0		52.0	52.0			25.0		25.0	25.0	
Actuated g/C Ratio		0.61		0.61	0.61			0.29		0.29	0.29	
Clearance Time (s)		5.0		5.0	5.0			5.0		5.0	5.0	
Lane Grp Cap (vph)		2695		596	2092			464		235	542	
v/s Ratio Prot					c0.10						0.12	
v/s Ratio Perm		0.08		0.06				c0.19		0.09		
v/c Ratio		0.13		0.10	0.17			0.64		0.30	0.40	
Uniform Delay, d1		7.0		6.8	7.1			26.1		23.2	24.0	
Progression Factor		1.00		1.00	1.00			1.00		1.00	1.00	
Incremental Delay, d2		0.1		0.3	0.2			6.6		3.2	2.2	
Delay (s)		7.1		7.1	7.3			32.7		26.4	26.1	
Level of Service		A		A	A			C		C	C	
Approach Delay (s)		7.1			7.3			32.7			26.2	
Approach LOS		A			A			C			C	

Intersection Summary			
HCM Average Control Delay	16.8	HCM Level of Service	B
HCM Volume to Capacity ratio	0.32		
Actuated Cycle Length (s)	85.0	Sum of lost time (s)	8.0
Intersection Capacity Utilization	93.2%	ICU Level of Service	F
Analysis Period (min)	15		
c Critical Lane Group			

Movement	EBL	EBT	EBR	WBL	WBT	WBR	NBL	NBT	NBR	SBL	SBT	SBR
Lane Configurations												
Ideal Flow (vphpl)	1900	1900	1900	1900	1900	1900	1900	1900	1900	1900	1900	1900
Total Lost time (s)		4.0			4.0		4.0	4.0		4.0	4.0	
Lane Util. Factor		0.91			0.91		1.00	1.00		1.00	1.00	
Frpb, ped/bikes		1.00			1.00		1.00	0.99		1.00	1.00	
Flpb, ped/bikes		1.00			1.00		0.99	1.00		0.99	1.00	
Frt		1.00			0.99		1.00	0.96		1.00	0.99	
Flt Protected		1.00			1.00		0.95	1.00		0.95	1.00	
Satd. Flow (prot)		5050			4993		1750	1782		1746	1838	
Flt Permitted		0.90			0.88		0.63	1.00		0.45	1.00	
Satd. Flow (perm)		4560			4416		1158	1782		829	1838	
Volume (vph)	25	377	7	34	342	33	30	170	53	23	121	10
Peak-hour factor, PHF	0.92	0.92	0.92	0.92	0.92	0.92	0.92	0.92	0.92	0.92	0.92	0.92
Adj. Flow (vph)	27	410	8	37	372	36	33	185	58	25	132	11
RTOR Reduction (vph)	0	2	0	0	13	0	0	14	0	0	4	0
Lane Group Flow (vph)	0	443	0	0	432	0	33	229	0	25	139	0
Confl. Peds. (#/hr)			18	18			12		18	18		12
Turn Type	Perm			Perm			Perm			Perm		
Protected Phases		4			8			2			6	
Permitted Phases	4			8			2			6		
Actuated Green, G (s)		50.0			50.0		19.0	19.0		19.0	19.0	
Effective Green, g (s)		51.5			51.5		20.5	20.5		20.5	20.5	
Actuated g/C Ratio		0.64			0.64		0.26	0.26		0.26	0.26	
Clearance Time (s)		5.5			5.5		5.5	5.5		5.5	5.5	
Lane Grp Cap (vph)		2936			2843		297	457		212	471	
v/s Ratio Prot								c0.13			0.08	
v/s Ratio Perm		0.10			c0.10		0.03			0.03		
v/c Ratio		0.15			0.15		0.11	0.50		0.12	0.30	
Uniform Delay, d1		5.6			5.6		22.8	25.4		22.8	23.9	
Progression Factor		1.00			0.80		1.00	1.00		0.95	0.95	
Incremental Delay, d2		0.1			0.1		0.8	3.9		1.1	1.6	
Delay (s)		5.7			4.6		23.5	29.3		22.9	24.4	
Level of Service		A			A		C	C		C	C	
Approach Delay (s)		5.7			4.6			28.6			24.2	
Approach LOS		A			A			C			C	

Intersection Summary			
HCM Average Control Delay	12.4	HCM Level of Service	B
HCM Volume to Capacity ratio	0.25		
Actuated Cycle Length (s)	80.0	Sum of lost time (s)	8.0
Intersection Capacity Utilization	51.4%	ICU Level of Service	A
Analysis Period (min)	15		
c Critical Lane Group			

Movement	EBL	EBT	EBR	WBL	WBT	WBR	NBL	NBT	NBR	SBL	SBT	SBR
Lane Configurations												
Ideal Flow (vphpl)	1900	1900	1900	1900	1900	1900	1900	1900	1900	1900	1900	1900
Total Lost time (s)		4.0			4.0			4.0			4.0	
Lane Util. Factor		0.91			0.91			0.95			0.95	
Frpb, ped/bikes		1.00			1.00			1.00			1.00	
Flpb, ped/bikes		1.00			1.00			1.00			1.00	
Frt		0.99			0.97			0.98			0.98	
Flt Protected		1.00			1.00			1.00			0.99	
Satd. Flow (prot)		5003			4864			3426			3422	
Flt Permitted		0.85			0.86			0.92			0.84	
Satd. Flow (perm)		4265			4217			3153			2911	
Volume (vph)	45	389	28	46	366	122	15	156	31	61	210	37
Peak-hour factor, PHF	0.92	0.92	0.92	0.92	0.92	0.92	0.92	0.92	0.92	0.92	0.92	0.92
Adj. Flow (vph)	49	423	30	50	398	133	16	170	34	66	228	40
RTOR Reduction (vph)	0	9	0	0	47	0	0	19	0	0	13	0
Lane Group Flow (vph)	0	493	0	0	534	0	0	201	0	0	321	0
Confl. Peds. (#/hr)	17		19	19		17	12		16	16		12
Turn Type	Perm			Perm			Perm			Perm		
Protected Phases		4			8			2			6	
Permitted Phases	4			8			2			6		
Actuated Green, G (s)		50.0			50.0			19.0			19.0	
Effective Green, g (s)		51.5			51.5			20.5			20.5	
Actuated g/C Ratio		0.64			0.64			0.26			0.26	
Clearance Time (s)		5.5			5.5			5.5			5.5	
Lane Grp Cap (vph)		2746			2715			808			746	
v/s Ratio Prot												
v/s Ratio Perm		0.12			c0.13			0.06			c0.11	
v/c Ratio		0.18			0.20			0.25			0.43	
Uniform Delay, d1		5.7			5.8			23.6			24.9	
Progression Factor		0.80			1.00			1.00			0.53	
Incremental Delay, d2		0.1			0.2			0.7			1.8	
Delay (s)		4.7			6.0			24.4			15.0	
Level of Service		A			A			C			B	
Approach Delay (s)		4.7			6.0			24.4			15.0	
Approach LOS		A			A			C			B	

Intersection Summary			
HCM Average Control Delay	9.9	HCM Level of Service	A
HCM Volume to Capacity ratio	0.26		
Actuated Cycle Length (s)	80.0	Sum of lost time (s)	8.0
Intersection Capacity Utilization	81.1%	ICU Level of Service	D
Analysis Period (min)	15		
c Critical Lane Group			

Movement	EBL	EBT	EBR	WBL	WBT	WBR	NBL	NBT	NBR	SBL	SBT	SBR
Lane Configurations												
Ideal Flow (vphpl)	1900	1900	1900	1900	1900	1900	1900	1900	1900	1900	1900	1900
Total Lost time (s)		4.0			4.0			4.0			4.0	
Lane Util. Factor		0.91			0.91			1.00			1.00	
Frpb, ped/bikes		1.00			0.95			1.00			0.95	
Flpb, ped/bikes		1.00			1.00			1.00			1.00	
Frt		1.00			0.97			0.93			0.93	
Flt Protected		1.00			1.00			0.98			0.98	
Satd. Flow (prot)		5062			4717			1695			1617	
Flt Permitted		0.91			0.93			0.89			0.83	
Satd. Flow (perm)		4637			4393			1548			1372	
Volume (vph)	16	478	10	10	473	100	10	0	10	58	0	55
Peak-hour factor, PHF	0.90	0.90	0.92	0.92	0.90	0.90	0.92	0.92	0.92	0.90	0.92	0.90
Adj. Flow (vph)	18	531	11	11	526	111	11	0	11	64	0	61
RTOR Reduction (vph)	0	1	0	0	0	0	0	10	0	0	0	0
Lane Group Flow (vph)	0	559	0	0	648	0	0	12	0	0	125	0
Confl. Peds. (#/hr)						98						98
Turn Type	Perm			Perm			Perm			Perm		
Protected Phases		4			8			2			6	
Permitted Phases	4			8			2			6		
Actuated Green, G (s)		65.9			65.9			11.1			11.1	
Effective Green, g (s)		65.9			65.9			11.1			11.1	
Actuated g/C Ratio		0.78			0.78			0.13			0.13	
Clearance Time (s)		4.0			4.0			4.0			4.0	
Vehicle Extension (s)		3.0			3.0			3.0			3.0	
Lane Grp Cap (vph)		3595			3406			202			179	
v/s Ratio Prot												
v/s Ratio Perm		0.12			c0.15			0.01			c0.09	
v/c Ratio		0.16			0.19			0.06			0.70	
Uniform Delay, d1		2.4			2.5			32.4			35.3	
Progression Factor		1.00			1.09			1.00			0.71	
Incremental Delay, d2		0.1			0.1			0.1			10.8	
Delay (s)		2.5			2.9			32.5			35.9	
Level of Service		A			A			C			D	
Approach Delay (s)		2.5			2.9			32.5			35.9	
Approach LOS		A			A			C			D	

Intersection Summary			
HCM Average Control Delay	6.2	HCM Level of Service	A
HCM Volume to Capacity ratio	0.26		
Actuated Cycle Length (s)	85.0	Sum of lost time (s)	8.0
Intersection Capacity Utilization	51.5%	ICU Level of Service	A
Analysis Period (min)	15		
c Critical Lane Group			

Movement	EBL	EBT	EBR	WBL	WBT	WBR	NBL	NBT	NBR	SBL	SBT	SBR
Lane Configurations												
Ideal Flow (vphpl)	1900	1900	1900	1900	1900	1900	1900	1900	1900	1900	1900	1900
Total Lost time (s)		4.0			4.0		4.0	4.0		4.0	4.0	
Lane Util. Factor		0.91			0.91		1.00	0.95		1.00	0.95	
Frpb, ped/bikes		1.00			0.99		1.00	1.00		1.00	0.99	
Flpb, ped/bikes		1.00			1.00		0.99	1.00		0.98	1.00	
Frt		0.97			0.97		1.00	0.99		1.00	0.97	
Flt Protected		0.99			0.99		0.95	1.00		0.95	1.00	
Satd. Flow (prot)		4869			4821		1753	3471		1738	3393	
Flt Permitted		0.69			0.74		0.38	1.00		0.51	1.00	
Satd. Flow (perm)		3381			3580		693	3471		925	3393	
Volume (vph)	110	337	94	79	382	133	60	349	39	101	480	137
Peak-hour factor, PHF	0.92	0.92	0.92	0.92	0.92	0.92	0.92	0.92	0.92	0.92	0.92	0.92
Adj. Flow (vph)	120	366	102	86	415	145	65	379	42	110	522	149
RTOR Reduction (vph)	0	55	0	0	110	0	0	5	0	0	15	0
Lane Group Flow (vph)	0	533	0	0	536	0	65	416	0	110	656	0
Confl. Peds. (#/hr)	40		9			40	25		31	31		25
Turn Type	Perm			pm+pt			Perm			Perm		
Protected Phases		4		3	8			2			6	
Permitted Phases	4			8			2			6		
Actuated Green, G (s)		19.2			19.2		55.3	55.3		55.3	55.3	
Effective Green, g (s)		20.7			20.7		56.3	56.3		56.3	56.3	
Actuated g/C Ratio		0.24			0.24		0.66	0.66		0.66	0.66	
Clearance Time (s)		5.5			5.5		5.0	5.0		5.0	5.0	
Vehicle Extension (s)		2.0			2.0		2.0	2.0		2.0	2.0	
Lane Grp Cap (vph)		823			872		459	2299		613	2247	
v/s Ratio Prot								0.12			c0.19	
v/s Ratio Perm		c0.16			0.15		0.09			0.12		
v/c Ratio		0.65			0.62		0.14	0.18		0.18	0.29	
Uniform Delay, d1		28.9			28.6		5.3	5.5		5.5	6.0	
Progression Factor		0.91			1.00		1.22	1.12		1.23	1.32	
Incremental Delay, d2		1.3			0.9		0.6	0.2		0.6	0.3	
Delay (s)		27.5			29.5		7.1	6.4		7.4	8.2	
Level of Service		C			C		A	A		A	A	
Approach Delay (s)		27.5			29.5			6.5			8.1	
Approach LOS		C			C			A			A	

Intersection Summary			
HCM Average Control Delay	17.9	HCM Level of Service	B
HCM Volume to Capacity ratio	0.39		
Actuated Cycle Length (s)	85.0	Sum of lost time (s)	8.0
Intersection Capacity Utilization	70.3%	ICU Level of Service	C
Analysis Period (min)	15		

c Critical Lane Group

Movement	EBL	EBT	EBR	WBL	WBT	WBR	NBL	NBT	NBR	SBL	SBT	SBR
Lane Configurations												
Ideal Flow (vphpl)	1900	1900	1900	1900	1900	1900	1900	1900	1900	1900	1900	1900
Total Lost time (s)		4.0			4.0			4.0	4.0		4.0	
Lane Util. Factor		0.91			0.91			1.00	1.00		1.00	
Frpb, ped/bikes		1.00			0.99			1.00	0.88		0.95	
Flpb, ped/bikes		1.00			1.00			0.93	1.00		0.94	
Frt		1.00			0.98			1.00	0.85		0.94	
Flt Protected		1.00			1.00			0.96	1.00		0.97	
Satd. Flow (prot)		5043			4928			1664	1395		1523	
Flt Permitted		0.89			0.91			0.84	1.00		0.86	
Satd. Flow (perm)		4495			4493			1458	1395		1346	
Volume (vph)	25	470	9	24	569	75	14	4	13	47	1	41
Peak-hour factor, PHF	0.91	0.91	0.91	0.91	0.91	0.91	0.91	0.91	0.91	0.91	0.91	0.91
Adj. Flow (vph)	27	516	10	26	625	82	15	4	14	52	1	45
RTOR Reduction (vph)	0	2	0	0	20	0	0	0	10	0	32	0
Lane Group Flow (vph)	0	551	0	0	713	0	0	19	4	0	66	0
Confl. Peds. (#/hr)	100		100	100		100	100		100	100		100
Turn Type	Perm			Perm			Perm		Perm	Perm		
Protected Phases		4			8			2			6	
Permitted Phases	4			8			2		2	6		
Actuated Green, G (s)		48.0			48.0			23.0	23.0		23.0	
Effective Green, g (s)		48.5			48.5			23.5	23.5		23.5	
Actuated g/C Ratio		0.61			0.61			0.29	0.29		0.29	
Clearance Time (s)		4.5			4.5			4.5	4.5		4.5	
Lane Grp Cap (vph)		2725			2724			428	410		395	
v/s Ratio Prot												
v/s Ratio Perm		0.12			c0.16			0.01	0.00		c0.05	
v/c Ratio		0.20			0.26			0.04	0.01		0.17	
Uniform Delay, d1		7.1			7.4			20.2	20.0		21.0	
Progression Factor		1.00			1.00			1.00	1.00		1.00	
Incremental Delay, d2		0.2			0.2			0.2	0.0		0.9	
Delay (s)		7.2			7.6			20.4	20.1		21.9	
Level of Service		A			A			C	C		C	
Approach Delay (s)		7.2			7.6			20.3			21.9	
Approach LOS		A			A			C			C	

Intersection Summary			
HCM Average Control Delay	8.7	HCM Level of Service	A
HCM Volume to Capacity ratio	0.23		
Actuated Cycle Length (s)	80.0	Sum of lost time (s)	8.0
Intersection Capacity Utilization	81.7%	ICU Level of Service	D
Analysis Period (min)	15		

c Critical Lane Group

Movement	EBL	EBT	EBR	WBL	WBT	WBR	NBL	NBT	NBR	SBL	SBT	SBR
Lane Configurations												
Ideal Flow (vphpl)	1900	1900	1900	1900	1900	1900	1900	1900	1900	1900	1900	1900
Total Lost time (s)	4.0	4.0		4.0	4.0		4.0	4.0		4.0	4.0	
Lane Util. Factor	1.00	0.91		1.00	0.91		1.00	0.91		1.00	0.91	
Frpb, ped/bikes	1.00	0.99		1.00	0.99		1.00	0.99		1.00	1.00	
Flpb, ped/bikes	1.00	1.00		1.00	1.00		1.00	1.00		1.00	1.00	
Frt	1.00	0.98		1.00	0.94		1.00	0.98		1.00	0.98	
Flt Protected	0.95	1.00		0.95	1.00		0.95	1.00		0.95	1.00	
Satd. Flow (prot)	1770	4942		1770	4737		1770	4943		1770	4981	
Flt Permitted	0.95	1.00		0.95	1.00		0.95	1.00		0.95	1.00	
Satd. Flow (perm)	1770	4942		1770	4737		1770	4943		1770	4981	
Volume (vph)	70	412	56	112	436	253	89	260	42	226	523	64
Peak-hour factor, PHF	0.90	0.90	0.90	0.90	0.90	0.90	0.90	0.90	0.90	0.90	0.90	0.90
Adj. Flow (vph)	78	458	62	124	484	281	99	289	47	251	581	71
RTOR Reduction (vph)	0	18	0	0	111	0	0	25	0	0	17	0
Lane Group Flow (vph)	78	502	0	124	654	0	99	312	0	251	635	0
Confl. Peds. (#/hr)			66			23			38			26
Turn Type	Prot			Prot			Prot			Prot		
Protected Phases	3	4		3	4		1	2		1	2	
Permitted Phases												
Actuated Green, G (s)	10.5	26.5		10.5	26.5		9.0	26.0		9.0	26.0	
Effective Green, g (s)	10.5	27.5		10.5	27.5		9.0	27.0		9.0	27.0	
Actuated g/C Ratio	0.12	0.31		0.12	0.31		0.10	0.30		0.10	0.30	
Clearance Time (s)	4.0	5.0		4.0	5.0		4.0	5.0		4.0	5.0	
Vehicle Extension (s)	2.0	2.0		2.0	2.0		2.0	2.0		2.0	2.0	
Lane Grp Cap (vph)	207	1510		207	1447		177	1483		177	1494	
v/s Ratio Prot	0.04	0.10		c0.07	c0.14		0.06	0.06		c0.14	c0.13	
v/s Ratio Perm												
v/c Ratio	0.38	0.33		0.60	0.45		0.56	0.21		1.42	0.43	
Uniform Delay, d1	36.7	24.2		37.8	25.2		38.6	23.5		40.5	25.3	
Progression Factor	1.00	1.00		0.97	2.02		1.00	1.00		1.00	1.00	
Incremental Delay, d2	0.4	0.6		2.4	0.8		2.2	0.3		217.9	0.9	
Delay (s)	37.1	24.7		39.2	51.6		40.8	23.9		258.4	26.2	
Level of Service	D	C		D	D		D	C		F	C	
Approach Delay (s)		26.4			49.8			27.7			90.7	
Approach LOS		C			D			C			F	

Intersection Summary			
HCM Average Control Delay	54.5	HCM Level of Service	D
HCM Volume to Capacity ratio	0.58		
Actuated Cycle Length (s)	90.0	Sum of lost time (s)	16.0
Intersection Capacity Utilization	72.9%	ICU Level of Service	C
Analysis Period (min)	15		

c Critical Lane Group

Movement	EBL	EBT	EBR	WBL	WBT	WBR	NBL	NBT	NBR	SBL	SBT	SBR
Lane Configurations												
Ideal Flow (vphpl)	1900	1900	1900	1900	1900	1900	1900	1900	1900	1900	1900	1900
Total Lost time (s)		4.0			4.0		4.0	4.0		4.0	4.0	
Lane Util. Factor		1.00			1.00		1.00	0.95		1.00	0.95	
Frpb, ped/bikes		0.93			0.95		1.00	0.99		1.00	0.98	
Flpb, ped/bikes		0.97			0.96		0.91	1.00		0.92	1.00	
Frt		0.95			0.94		1.00	0.99		1.00	0.99	
Flt Protected		0.98			0.99		0.95	1.00		0.95	1.00	
Satd. Flow (prot)		1570			1592		1611	3486		1635	3437	
Flt Permitted		0.73			0.90		0.49	1.00		0.43	1.00	
Satd. Flow (perm)		1163			1449		824	3486		747	3437	
Volume (vph)	27	19	26	25	34	42	54	509	24	24	389	37
Peak-hour factor, PHF	0.92	0.92	0.92	0.92	0.92	0.92	0.92	0.92	0.92	0.92	0.92	0.92
Adj. Flow (vph)	29	21	28	27	37	46	59	553	26	26	423	40
RTOR Reduction (vph)	0	26	0	0	39	0	0	2	0	0	4	0
Lane Group Flow (vph)	0	52	0	0	71	0	59	577	0	26	459	0
Confl. Peds. (#/hr)	100		100	100		100	100		100	100		100
Turn Type	Perm			Perm			Perm			Perm		
Protected Phases		4			4			2			6	
Permitted Phases	4			4			2			6		
Actuated Green, G (s)		7.3			7.3		70.7	70.7		70.7	70.7	
Effective Green, g (s)		6.8			6.8		70.2	70.2		70.2	70.2	
Actuated g/C Ratio		0.08			0.08		0.83	0.83		0.83	0.83	
Clearance Time (s)		3.5			3.5		3.5	3.5		3.5	3.5	
Vehicle Extension (s)		2.0			2.0		2.0	2.0		2.0	2.0	
Lane Grp Cap (vph)		93			116		681	2879		617	2839	
v/s Ratio Prot								c0.17			0.13	
v/s Ratio Perm		0.04			c0.05		0.07			0.03		
v/c Ratio		0.56			0.62		0.09	0.20		0.04	0.16	
Uniform Delay, d1		37.7			37.8		1.4	1.5		1.3	1.5	
Progression Factor		1.00			1.00		1.00	1.00		0.45	0.42	
Incremental Delay, d2		4.6			6.6		0.3	0.2		0.1	0.1	
Delay (s)		42.2			44.5		1.6	1.7		0.7	0.7	
Level of Service		D			D		A	A		A	A	
Approach Delay (s)		42.2			44.5			1.7			0.7	
Approach LOS		D			D			A			A	

Intersection Summary			
HCM Average Control Delay	7.3	HCM Level of Service	A
HCM Volume to Capacity ratio	0.24		
Actuated Cycle Length (s)	85.0	Sum of lost time (s)	8.0
Intersection Capacity Utilization	54.6%	ICU Level of Service	A
Analysis Period (min)	15		

c Critical Lane Group

Movement	EBL	EBT	EBR	WBL	WBT	WBR	NBL	NBT	NBR	SBL	SBT	SBR
Lane Configurations												
Ideal Flow (vphpl)	1900	1900	1900	1900	1900	1900	1900	1900	1900	1900	1900	1900
Total Lost time (s)	4.0	4.0		4.0	4.0		4.0	4.0		4.0	4.0	
Lane Util. Factor	1.00	0.95		1.00	0.95		1.00	0.95		1.00	0.95	
Frpb, ped/bikes	1.00	0.97		1.00	0.94		1.00	0.99		1.00	0.95	
Flpb, ped/bikes	1.00	1.00		1.00	1.00		0.93	1.00		0.95	1.00	
Frt	1.00	0.97		1.00	0.96		1.00	0.99		1.00	0.96	
Flt Protected	0.95	1.00		0.95	1.00		0.95	1.00		0.95	1.00	
Satd. Flow (prot)	1770	3330		1770	3191		1647	3464		1675	3211	
Flt Permitted	0.95	1.00		0.95	1.00		0.41	1.00		0.50	1.00	
Satd. Flow (perm)	1770	3330		1770	3191		707	3464		883	3211	
Volume (vph)	255	350	97	50	270	105	58	322	30	49	341	141
Peak-hour factor, PHF	0.90	0.90	0.90	0.90	0.90	0.90	0.90	0.90	0.90	0.90	0.90	0.90
Adj. Flow (vph)	283	389	108	56	300	117	64	358	33	54	379	157
RTOR Reduction (vph)	0	28	0	0	55	0	0	7	0	0	43	0
Lane Group Flow (vph)	283	469	0	56	362	0	64	384	0	54	493	0
Confl. Peds. (#/hr)			100			100	100		100	100		100
Turn Type	Prot			Prot			Perm			Perm		
Protected Phases	7	4		3	8			2			6	
Permitted Phases							2			6		
Actuated Green, G (s)	16.5	26.7		4.9	15.1		39.9	39.9		39.9	39.9	
Effective Green, g (s)	17.0	26.2		5.4	14.6		41.4	41.4		41.4	41.4	
Actuated g/C Ratio	0.20	0.31		0.06	0.17		0.49	0.49		0.49	0.49	
Clearance Time (s)	4.5	3.5		4.5	3.5		5.5	5.5		5.5	5.5	
Vehicle Extension (s)	2.0	2.0		2.0	2.0		2.0	2.0		2.0	2.0	
Lane Grp Cap (vph)	354	1026		112	548		344	1687		430	1564	
v/s Ratio Prot	c0.16	0.14		0.03	c0.11			0.11			c0.15	
v/s Ratio Perm							0.09			0.06		
v/c Ratio	0.80	0.46		0.50	0.66		0.19	0.23		0.13	0.32	
Uniform Delay, d1	32.4	23.7		38.5	32.9		12.3	12.6		11.9	13.2	
Progression Factor	1.00	1.00		1.00	1.00		1.00	1.00		1.00	1.00	
Incremental Delay, d2	11.2	0.1		1.3	2.3		1.2	0.3		0.6	0.5	
Delay (s)	43.6	23.8		39.8	35.2		13.5	12.9		12.5	13.7	
Level of Service	D	C		D	D		B	B		B	B	
Approach Delay (s)		31.0			35.8			13.0			13.6	
Approach LOS		C			D			B			B	

Intersection Summary			
HCM Average Control Delay	23.9	HCM Level of Service	C
HCM Volume to Capacity ratio	0.50		
Actuated Cycle Length (s)	85.0	Sum of lost time (s)	12.0
Intersection Capacity Utilization	72.3%	ICU Level of Service	C
Analysis Period (min)	15		

c Critical Lane Group

Movement	EBL	EBR	NBL	NBT	SBT	SBR
Lane Configurations						
Ideal Flow (vphpl)	1900	1900	1900	1900	1900	1900
Total Lost time (s)	4.0		4.0	4.0	4.0	
Lane Util. Factor	1.00		1.00	0.95	0.95	
Frt	0.91		1.00	1.00	0.98	
Flt Protected	0.98		0.95	1.00	1.00	
Satd. Flow (prot)	1670		1770	3539	3481	
Flt Permitted	0.98		0.95	1.00	1.00	
Satd. Flow (perm)	1670		1770	3539	3481	
Volume (vph)	73	136	61	558	597	74
Peak-hour factor, PHF	0.92	0.92	0.92	0.92	0.92	0.92
Adj. Flow (vph)	79	148	66	607	649	80
RTOR Reduction (vph)	108	0	0	0	6	0
Lane Group Flow (vph)	119	0	66	607	723	0
Turn Type			Prot			
Protected Phases	2		3	8	4	
Permitted Phases						
Actuated Green, G (s)	10.7		7.4	66.3	54.9	
Effective Green, g (s)	10.7		7.4	66.3	54.9	
Actuated g/C Ratio	0.13		0.09	0.78	0.65	
Clearance Time (s)	4.0		4.0	4.0	4.0	
Vehicle Extension (s)	3.0		3.0	3.0	3.0	
Lane Grp Cap (vph)	210		154	2760	2248	
v/s Ratio Prot	c0.07		c0.04	0.17	c0.21	
v/s Ratio Perm						
v/c Ratio	0.57		0.43	0.22	0.32	
Uniform Delay, d1	35.0		36.8	2.5	6.7	
Progression Factor	1.00		1.00	1.77	0.33	
Incremental Delay, d2	3.5		1.8	0.2	0.3	
Delay (s)	38.5		38.6	4.6	2.6	
Level of Service	D		D	A	A	
Approach Delay (s)	38.5			7.9	2.6	
Approach LOS	D			A	A	

Intersection Summary			
HCM Average Control Delay	9.8	HCM Level of Service	A
HCM Volume to Capacity ratio	0.37		
Actuated Cycle Length (s)	85.0	Sum of lost time (s)	12.0
Intersection Capacity Utilization	44.6%	ICU Level of Service	A
Analysis Period (min)	15		

c Critical Lane Group

Movement	EBL	EBT	EBR	WBL	WBT	WBR	NBL	NBT	NBR	SBL	SBT	SBR
Lane Configurations												
Ideal Flow (vphpl)	1900	1900	1900	1900	1900	1900	1900	1900	1900	1900	1900	1900
Lane Width	12	12	12	12	12	12	16	16	16	16	16	16
Total Lost time (s)	4.0	4.0		4.0	4.0		2.0	2.0		2.0	2.0	
Lane Util. Factor	1.00	0.91		1.00	0.91		1.00	1.00		1.00	1.00	
Frpb, ped/bikes	1.00	0.99		1.00	1.00		1.00	0.99		1.00	0.98	
Flpb, ped/bikes	1.00	1.00		1.00	1.00		1.00	1.00		0.98	1.00	
Frt	1.00	0.98		1.00	0.98		1.00	0.96		1.00	0.93	
Flt Protected	0.95	1.00		0.95	1.00		0.95	1.00		0.95	1.00	
Satd. Flow (prot)	1770	4932		1770	4971		2005	2002		1960	1919	
Flt Permitted	0.95	1.00		0.95	1.00		0.13	1.00		0.56	1.00	
Satd. Flow (perm)	1770	4932		1770	4971		278	2002		1160	1919	
Volume (vph)	322	1229	176	80	958	138	165	233	79	133	267	259
Peak-hour factor, PHF	0.95	0.95	0.95	0.95	0.95	0.95	0.95	0.95	0.95	0.95	0.95	0.95
Adj. Flow (vph)	339	1294	185	84	1008	145	174	245	83	140	281	273
RTOR Reduction (vph)	0	18	0	0	19	0	0	14	0	0	39	0
Lane Group Flow (vph)	339	1461	0	84	1134	0	174	314	0	140	515	0
Confl. Peds. (#/hr)			32	32		4	12		24	24		12
Parking (#/hr)												0
Turn Type	Prot			Prot			pm+pt			Perm		
Protected Phases	7	4		3	8		5	2			6	
Permitted Phases							2			6		
Actuated Green, G (s)	18.0	38.2		5.9	26.1		38.9	38.9		27.9	27.9	
Effective Green, g (s)	18.0	38.2		5.9	26.1		39.4	39.4		28.4	28.4	
Actuated g/C Ratio	0.19	0.41		0.06	0.28		0.42	0.42		0.30	0.30	
Clearance Time (s)	4.0	4.0		4.0	4.0		4.0	2.5		2.5	2.5	
Vehicle Extension (s)	3.0	3.0		3.0	3.0		3.0	3.0		3.0	3.0	
Lane Grp Cap (vph)	341	2015		112	1388		283	844		352	583	
v/s Ratio Prot	c0.19	0.30		0.05	c0.23		c0.06	0.16			c0.27	
v/s Ratio Perm							0.20			0.12		
v/c Ratio	0.99	0.72		0.75	0.82		0.61	0.37		0.40	0.88	
Uniform Delay, d1	37.7	23.2		43.1	31.5		21.8	18.6		25.8	31.0	
Progression Factor	1.00	1.00		1.00	1.00		1.00	1.00		1.00	1.00	
Incremental Delay, d2	46.9	2.3		24.2	5.4		3.9	0.3		0.7	14.8	
Delay (s)	84.6	25.5		67.3	36.9		25.7	18.8		26.5	45.7	
Level of Service	F	C		E	D		C	B		C	D	
Approach Delay (s)		36.6			39.0			21.2			41.9	
Approach LOS		D			D			C			D	

Intersection Summary			
HCM Average Control Delay	36.3	HCM Level of Service	D
HCM Volume to Capacity ratio	0.85		
Actuated Cycle Length (s)	93.5	Sum of lost time (s)	12.0
Intersection Capacity Utilization	92.4%	ICU Level of Service	F
Analysis Period (min)	15		

c Critical Lane Group

Movement	EBL	EBT	EBR	WBL	WBT	WBR	NBL	NBT	NBR	SBL	SBT	SBR
Lane Configurations												
Ideal Flow (vphpl)	1900	1900	1900	1900	1900	1900	1900	1900	1900	1900	1900	1900
Total Lost time (s)		4.0		4.0	4.0			4.0		4.0	4.0	
Lane Util. Factor		1.00		0.95	0.95			0.95		1.00	0.95	
Frpb, ped/bikes		1.00		1.00	0.92			0.94		1.00	0.90	
Flpb, ped/bikes		1.00		1.00	1.00			1.00		1.00	1.00	
Frt		0.92		1.00	0.92			0.97		1.00	0.95	
Flt Protected		0.98		0.95	1.00			1.00		0.95	1.00	
Satd. Flow (prot)		1688		1681	1494			3200		1770	3038	
Flt Permitted		0.48		0.73	1.00			0.94		0.95	1.00	
Satd. Flow (perm)		823		1296	1494			3012		1770	3038	
Volume (vph)	12	3	21	105	102	118	10	998	284	98	805	398
Peak-hour factor, PHF	0.95	0.95	0.95	0.95	0.95	0.95	0.95	0.95	0.95	0.95	0.95	0.95
Adj. Flow (vph)	13	3	22	111	107	124	11	1051	299	103	847	419
RTOR Reduction (vph)	0	21	0	0	45	0	0	20	0	0	47	0
Lane Group Flow (vph)	0	17	0	111	186	0	0	1341	0	103	1219	0
Confl. Peds. (#/hr)						100	100		100			100
Turn Type	Perm			Perm			Perm			Prot		
Protected Phases		7			8			2		1	6	
Permitted Phases	7			8			2					
Actuated Green, G (s)		5.1		15.8	15.8			52.4		8.7	65.6	
Effective Green, g (s)		5.6		16.3	16.3			52.9		9.2	66.1	
Actuated g/C Ratio		0.06		0.16	0.16			0.53		0.09	0.66	
Clearance Time (s)		4.5		4.5	4.5			4.5		4.5	4.5	
Vehicle Extension (s)		2.0		2.0	2.0			2.0		2.0	2.0	
Lane Grp Cap (vph)		46		211	244			1593		163	2008	
v/s Ratio Prot										0.06	c0.40	
v/s Ratio Perm		c0.02		0.09	0.12			c0.45				
v/c Ratio		0.37		0.53	0.76			0.84		0.63	0.61	
Uniform Delay, d1		45.5		38.3	40.0			20.0		43.8	9.6	
Progression Factor		1.00		1.00	1.00			0.79		1.00	1.00	
Incremental Delay, d2		1.9		1.1	11.9			3.1		5.8	1.4	
Delay (s)		47.4		39.4	51.9			19.0		49.5	11.0	
Level of Service		D		D	D			B		D	B	
Approach Delay (s)		47.4			47.8			19.0			13.9	
Approach LOS		D			D			B			B	

Intersection Summary			
HCM Average Control Delay	20.2	HCM Level of Service	C
HCM Volume to Capacity ratio	0.78		
Actuated Cycle Length (s)	100.0	Sum of lost time (s)	16.0
Intersection Capacity Utilization	102.6%	ICU Level of Service	G
Analysis Period (min)	15		

c Critical Lane Group

Movement	EBL	EBT	EBR	WBL	WBT	WBR	NBL	NBT	NBR	SBL	SBT	SBR
Lane Configurations												
Ideal Flow (vphpl)	1900	1900	1900	1900	1900	1900	1900	1900	1900	1900	1900	1900
Total Lost time (s)	4.0	4.0		4.0	4.0		4.0	4.0		4.0	4.0	
Lane Util. Factor	0.97	0.95		1.00	0.95		1.00	0.95		1.00	0.95	
Frpb, ped/bikes	1.00	0.98		1.00	0.95		1.00	0.97		1.00	0.98	
Flpb, ped/bikes	1.00	1.00		1.00	1.00		1.00	1.00		1.00	1.00	
Frt	1.00	0.99		1.00	0.95		1.00	0.97		1.00	0.99	
Flt Protected	0.95	1.00		0.95	1.00		0.95	1.00		0.95	1.00	
Satd. Flow (prot)	3433	3428		1770	3221		1770	3357		1770	3434	
Flt Permitted	0.95	1.00		0.95	1.00		0.95	1.00		0.95	1.00	
Satd. Flow (perm)	3433	3428		1770	3221		1770	3357		1770	3434	
Volume (vph)	508	822	72	93	468	212	69	594	127	203	682	56
Peak-hour factor, PHF	0.95	0.95	0.95	0.95	0.95	0.95	0.95	0.95	0.95	0.95	0.95	0.95
Adj. Flow (vph)	535	865	76	98	493	223	73	625	134	214	718	59
RTOR Reduction (vph)	0	6	0	0	52	0	0	18	0	0	6	0
Lane Group Flow (vph)	535	935	0	98	664	0	73	741	0	214	771	0
Confl. Peds. (#/hr)			100			100			100			100
Turn Type	Prot			Prot			Prot			Prot		
Protected Phases	7	4		3	8		5	2		1	6	
Permitted Phases												
Actuated Green, G (s)	16.0	30.5		8.0	22.5		5.0	32.5		12.0	39.5	
Effective Green, g (s)	15.5	31.5		7.5	23.5		4.5	33.5		11.5	40.5	
Actuated g/C Ratio	0.16	0.32		0.08	0.24		0.04	0.34		0.12	0.40	
Clearance Time (s)	3.5	5.0		3.5	5.0		3.5	5.0		3.5	5.0	
Vehicle Extension (s)	2.0	2.0		2.0	2.0		2.0	2.0		2.0	2.0	
Lane Grp Cap (vph)	532	1080		133	757		80	1125		204	1391	
v/s Ratio Prot	c0.16	c0.27		0.06	0.21		0.04	c0.22		c0.12	0.22	
v/s Ratio Perm												
v/c Ratio	1.01	0.87		0.74	0.88		0.91	0.66		1.05	0.55	
Uniform Delay, d1	42.2	32.3		45.3	36.9		47.6	28.4		44.2	22.8	
Progression Factor	1.00	1.00		1.00	1.00		1.00	1.00		1.16	0.79	
Incremental Delay, d2	40.4	7.2		16.6	10.9		70.5	3.0		70.3	1.3	
Delay (s)	82.7	39.4		61.9	47.7		118.0	31.4		121.8	19.4	
Level of Service	F	D		E	D		F	C		F	B	
Approach Delay (s)		55.1			49.4			39.0			41.5	
Approach LOS		E			D			D			D	

Intersection Summary			
HCM Average Control Delay	47.4	HCM Level of Service	D
HCM Volume to Capacity ratio	0.82		
Actuated Cycle Length (s)	100.0	Sum of lost time (s)	12.0
Intersection Capacity Utilization	82.2%	ICU Level of Service	E
Analysis Period (min)	15		

c Critical Lane Group

Movement	EBL	EBT	EBR	WBL	WBT	WBR	NBL	NBT	NBR	SBL	SBT	SBR
Lane Configurations												
Ideal Flow (vphpl)	1900	1900	1900	1900	1900	1900	1900	1900	1900	1900	1900	1900
Total Lost time (s)		4.0						4.0		4.0	4.0	
Lane Util. Factor		1.00						0.95		0.97	0.95	
Frt		0.86						0.93		1.00	0.97	
Flt Protected		1.00						1.00		0.95	1.00	
Satd. Flow (prot)		1611						3287		3433	3442	
Flt Permitted		1.00						0.95		0.95	1.00	
Satd. Flow (perm)		1611						3111		3433	3442	
Volume (vph)	0	0	6	0	0	0	10	285	260	1430	288	64
Peak-hour factor, PHF	0.92	0.92	0.92	0.92	0.92	0.92	0.92	0.92	0.92	0.92	0.92	0.92
Adj. Flow (vph)	0	0	7	0	0	0	11	310	283	1554	313	70
RTOR Reduction (vph)	0	7	0	0	0	0	0	21	0	0	0	0
Lane Group Flow (vph)	0	0	0	0	0	0	0	583	0	1554	383	0
Turn Type							Perm			Prot		
Protected Phases								2		1	6	
Permitted Phases							2					
Actuated Green, G (s)		0.0						13.0		29.0	50.0	
Effective Green, g (s)		0.0						13.0		29.0	50.0	
Actuated g/C Ratio		0.00						0.26		0.58	1.00	
Clearance Time (s)								4.0		4.0	2.0	
Lane Grp Cap (vph)		0						809		1991	3442	
v/s Ratio Prot										c0.45	0.11	
v/s Ratio Perm								c0.19				
v/c Ratio		0.00						0.72		0.78	0.11	
Uniform Delay, d1		25.0						16.8		8.1	0.0	
Progression Factor		1.00						0.75		1.00	1.00	
Incremental Delay, d2		0.0						5.3		3.1	0.1	
Delay (s)		25.0						18.0		11.2	0.1	
Level of Service		C						B		B	A	
Approach Delay (s)		25.0			0.0			18.0			9.0	
Approach LOS		C			A			B			A	

Intersection Summary			
HCM Average Control Delay	11.2	HCM Level of Service	B
HCM Volume to Capacity ratio	0.76		
Actuated Cycle Length (s)	50.0	Sum of lost time (s)	8.0
Intersection Capacity Utilization	70.6%	ICU Level of Service	C
Analysis Period (min)	15		

c Critical Lane Group

Movement	EBL	EBT	EBR	WBL	WBT	WBR	NBL	NBT	NBR	SBL	SBT	SBR
Lane Configurations												
Ideal Flow (vphpl)	1900	1900	1900	1900	1900	1900	1900	1900	1900	1900	1900	1900
Total Lost time (s)		4.0			4.0			4.0			4.0	
Lane Util. Factor		1.00			1.00			0.95			0.95	
Frpb, ped/bikes		0.95			0.97			0.98			0.99	
Flpb, ped/bikes		0.98			0.96			1.00			0.99	
Frt		0.96			0.96			0.98			0.99	
Flt Protected		0.98			0.99			1.00			0.99	
Satd. Flow (prot)		1643			1649			3404			3439	
Flt Permitted		0.88			0.91			0.94			0.85	
Satd. Flow (perm)		1471			1519			3201			2956	
Volume (vph)	26	27	21	48	72	50	18	423	66	43	264	20
Peak-hour factor, PHF	0.90	0.90	0.90	0.90	0.90	0.90	0.90	0.90	0.90	0.90	0.90	0.90
Adj. Flow (vph)	29	30	23	53	80	56	20	470	73	48	293	22
RTOR Reduction (vph)	0	15	0	0	30	0	0	24	0	0	10	0
Lane Group Flow (vph)	0	67	0	0	159	0	0	540	0	0	354	0
Confl. Peds. (#/hr)	100		100	100		100	100		100	100		100
Turn Type	Perm			Perm			Perm			Perm		
Protected Phases		4			8			2			6	
Permitted Phases	4			8			2			6		
Actuated Green, G (s)		17.0			17.0			25.0			25.0	
Effective Green, g (s)		17.0			17.0			25.0			25.0	
Actuated g/C Ratio		0.34			0.34			0.50			0.50	
Clearance Time (s)		4.0			4.0			4.0			4.0	
Lane Grp Cap (vph)		500			516			1601			1478	
v/s Ratio Prot												
v/s Ratio Perm		0.05			c0.10			c0.17			0.12	
v/c Ratio		0.13			0.31			0.34			0.24	
Uniform Delay, d1		11.4			12.2			7.5			7.1	
Progression Factor		1.00			1.00			1.00			1.00	
Incremental Delay, d2		0.6			1.5			0.6			0.4	
Delay (s)		12.0			13.7			8.1			7.5	
Level of Service		B			B			A			A	
Approach Delay (s)		12.0			13.7			8.1			7.5	
Approach LOS		B			B			A			A	

Intersection Summary			
HCM Average Control Delay	9.1	HCM Level of Service	A
HCM Volume to Capacity ratio	0.32		
Actuated Cycle Length (s)	50.0	Sum of lost time (s)	8.0
Intersection Capacity Utilization	62.8%	ICU Level of Service	B
Analysis Period (min)	15		
c Critical Lane Group			

Movement	EBL	EBT	EBR	WBL	WBT	WBR	NBL	NBT	NBR	SBL	SBT	SBR
Lane Configurations												
Ideal Flow (vphpl)	1900	1900	1900	1900	1900	1900	1900	1900	1900	1900	1900	1900
Total Lost time (s)		4.0			4.0			4.0			4.0	
Lane Util. Factor		1.00			1.00			0.95			0.91	
Frpb, ped/bikes		0.96			0.96			0.99			0.98	
Flpb, ped/bikes		0.97			0.98			1.00			1.00	
Frt		0.96			0.97			0.99			0.99	
Flt Protected		0.98			0.99			1.00			1.00	
Satd. Flow (prot)		1631			1680			3475			4927	
Flt Permitted		0.86			0.86			0.91			0.91	
Satd. Flow (perm)		1420			1459			3180			4490	
Volume (vph)	46	49	39	19	41	21	24	1045	39	18	927	67
Peak-hour factor, PHF	0.94	0.94	0.94	0.94	0.94	0.94	0.94	0.94	0.94	0.94	0.94	0.94
Adj. Flow (vph)	49	52	41	20	44	22	26	1112	41	19	986	71
RTOR Reduction (vph)	0	28	0	0	19	0	0	1	0	0	4	0
Lane Group Flow (vph)	0	114	0	0	67	0	0	1178	0	0	1072	0
Confl. Peds. (#/hr)	100		100	100		100	100		100	100		100
Turn Type	Perm			Perm			Perm			Perm		
Protected Phases		4			4			2			6	
Permitted Phases	4			4			2			6		
Actuated Green, G (s)		8.6			8.6			62.4			62.4	
Effective Green, g (s)		9.1			9.1			62.9			62.9	
Actuated g/C Ratio		0.11			0.11			0.79			0.79	
Clearance Time (s)		4.5			4.5			4.5			4.5	
Vehicle Extension (s)		2.0			2.0			2.0			2.0	
Lane Grp Cap (vph)		162			166			2500			3530	
v/s Ratio Prot												
v/s Ratio Perm		c0.08			0.05			c0.37			0.24	
v/c Ratio		0.70			0.40			0.47			0.30	
Uniform Delay, d1		34.1			32.9			2.9			2.4	
Progression Factor		1.00			1.00			2.25			1.00	
Incremental Delay, d2		10.6			0.6			0.5			0.2	
Delay (s)		44.8			33.5			7.0			2.6	
Level of Service		D			C			A			A	
Approach Delay (s)		44.8			33.5			7.0			2.6	
Approach LOS		D			C			A			A	

Intersection Summary			
HCM Average Control Delay	8.2	HCM Level of Service	A
HCM Volume to Capacity ratio	0.50		
Actuated Cycle Length (s)	80.0	Sum of lost time (s)	8.0
Intersection Capacity Utilization	81.6%	ICU Level of Service	D
Analysis Period (min)	15		
c Critical Lane Group			

Movement	EBL	EBT	EBR	WBL	WBT	WBR	NBL	NBT	NBR	SBL	SBT	SBR
Lane Configurations												
Ideal Flow (vphpl)	1900	1900	1900	1900	1900	1900	1900	1900	1900	1900	1900	1900
Total Lost time (s)	4.0	4.0		4.0	4.0		4.0	4.0		4.0	4.0	
Lane Util. Factor	1.00	0.95		1.00	0.95		1.00	1.00		1.00	1.00	
Frpb, ped/bikes	1.00	0.99		1.00	0.98		1.00	0.99		1.00	0.99	
Flpb, ped/bikes	0.96	1.00		0.98	1.00		0.96	1.00		0.97	1.00	
Frt	1.00	0.99		1.00	0.98		1.00	0.98		1.00	0.99	
Flt Protected	0.95	1.00		0.95	1.00		0.95	1.00		0.95	1.00	
Satd. Flow (prot)	1693	3487		1731	3402		1697	1822		1720	1830	
Flt Permitted	0.29	1.00		0.24	1.00		0.56	1.00		0.37	1.00	
Satd. Flow (perm)	520	3487		441	3402		992	1822		667	1830	
Volume (vph)	26	674	45	44	548	84	109	389	43	94	222	19
Peak-hour factor, PHF	0.92	0.92	0.92	0.92	0.92	0.92	0.92	0.92	0.92	0.92	0.92	0.92
Adj. Flow (vph)	28	733	49	48	596	91	118	423	47	102	241	21
RTOR Reduction (vph)	0	6	0	0	15	0	0	5	0	0	4	0
Lane Group Flow (vph)	28	776	0	48	672	0	118	465	0	102	258	0
Confl. Peds. (#/hr)	100		100	100		100	100		100	100		100
Turn Type	Perm			Perm			Perm			Perm		
Protected Phases		4			8			2			6	
Permitted Phases	4			8			2			6		
Actuated Green, G (s)	33.0	33.0		33.0	33.0		40.5	40.5		40.5	40.5	
Effective Green, g (s)	32.0	32.0		32.0	32.0		40.0	40.0		40.0	40.0	
Actuated g/C Ratio	0.40	0.40		0.40	0.40		0.50	0.50		0.50	0.50	
Clearance Time (s)	3.0	3.0		3.0	3.0		3.5	3.5		3.5	3.5	
Lane Grp Cap (vph)	208	1395		176	1361		496	911		334	915	
v/s Ratio Prot		c0.22			0.20			c0.26			0.14	
v/s Ratio Perm	0.05			0.11			0.12			0.15		
v/c Ratio	0.13	0.56		0.27	0.49		0.24	0.51		0.31	0.28	
Uniform Delay, d1	15.2	18.5		16.2	17.9		11.4	13.4		11.8	11.6	
Progression Factor	1.00	1.00		1.94	2.02		1.80	1.84		1.00	1.00	
Incremental Delay, d2	1.3	1.6		3.2	1.1		0.7	1.3		2.4	0.8	
Delay (s)	16.6	20.1		34.6	37.3		21.2	26.0		14.2	12.4	
Level of Service	B	C		C	D		C	C		B	B	
Approach Delay (s)		20.0			37.1			25.0			12.9	
Approach LOS		C			D			C			B	

Intersection Summary			
HCM Average Control Delay	25.2	HCM Level of Service	C
HCM Volume to Capacity ratio	0.53		
Actuated Cycle Length (s)	80.0	Sum of lost time (s)	8.0
Intersection Capacity Utilization	81.0%	ICU Level of Service	D
Analysis Period (min)	15		
c Critical Lane Group			

Movement	EBL	EBT	EBR	WBL	WBT	WBR	NBL	NBT	NBR	SBL	SBT	SBR
Lane Configurations												
Ideal Flow (vphpl)	1900	1900	1900	1900	1900	1900	1900	1900	1900	1900	1900	1900
Total Lost time (s)	4.0	4.0		4.0	4.0			4.0			4.0	
Lane Util. Factor	1.00	0.95		1.00	0.95			0.95			0.95	
Frpb, ped/bikes	1.00	0.99		1.00	0.99			0.99			0.99	
Flpb, ped/bikes	0.97	1.00		0.98	1.00			0.99			1.00	
Frt	1.00	0.99		1.00	0.99			0.98			0.97	
Flt Protected	0.95	1.00		0.95	1.00			0.99			0.99	
Satd. Flow (prot)	1709	3471		1730	3494			3340			3337	
Flt Permitted	0.25	1.00		0.16	1.00			0.84			0.91	
Satd. Flow (perm)	448	3471		291	3494			2855			3042	
Volume (vph)	26	774	60	30	617	31	74	165	46	19	96	33
Peak-hour factor, PHF	0.97	0.97	0.97	0.97	0.97	0.97	0.97	0.97	0.97	0.97	0.97	0.97
Adj. Flow (vph)	27	798	62	31	636	32	76	170	47	20	99	34
RTOR Reduction (vph)	0	7	0	0	5	0	0	5	0	0	12	0
Lane Group Flow (vph)	27	853	0	31	663	0	0	288	0	0	141	0
Confl. Peds. (#/hr)	100		100	100		100	100		100	100		100
Turn Type	Perm			Perm			Perm			Perm		
Protected Phases		4			8			2			6	
Permitted Phases	4			8			2			6		
Actuated Green, G (s)	24.0	24.0		24.0	24.0			46.0			46.0	
Effective Green, g (s)	25.0	25.0		25.0	25.0			47.0			47.0	
Actuated g/C Ratio	0.31	0.31		0.31	0.31			0.59			0.59	
Clearance Time (s)	5.0	5.0		5.0	5.0			5.0			5.0	
Lane Grp Cap (vph)	140	1085		91	1092			1677			1787	
v/s Ratio Prot		c0.25			0.19							
v/s Ratio Perm	0.06			0.11				c0.10			0.05	
v/c Ratio	0.19	0.79		0.34	0.61			0.17			0.08	
Uniform Delay, d1	20.1	25.1		21.2	23.3			7.6			7.1	
Progression Factor	0.45	0.49		0.92	0.95			1.26			1.00	
Incremental Delay, d2	2.6	5.0		8.9	2.3			0.2			0.1	
Delay (s)	11.8	17.4		28.3	24.5			9.7			7.2	
Level of Service	B	B		C	C			A			A	
Approach Delay (s)		17.2			24.6			9.7			7.2	
Approach LOS		B			C			A			A	

Intersection Summary			
HCM Average Control Delay	18.0	HCM Level of Service	B
HCM Volume to Capacity ratio	0.39		
Actuated Cycle Length (s)	80.0	Sum of lost time (s)	8.0
Intersection Capacity Utilization	61.6%	ICU Level of Service	B
Analysis Period (min)	15		
c Critical Lane Group			

Movement	EBL	EBT	EBR	WBL	WBT	WBR	NBL	NBT	NBR	SBL	SBT	SBR
Lane Configurations												
Ideal Flow (vphpl)	1900	1900	1900	1900	1900	1900	1900	1900	1900	1900	1900	1900
Total Lost time (s)	4.0	4.0		4.0	4.0			4.0			4.0	
Lane Util. Factor	1.00	0.95		1.00	0.95			0.95			0.95	
Frpb, ped/bikes	1.00	1.00		1.00	0.99			0.99			1.00	
Flpb, ped/bikes	1.00	1.00		0.99	1.00			1.00			1.00	
Frt	1.00	0.99		1.00	0.97			0.96			0.98	
Flt Protected	0.95	1.00		0.95	1.00			0.99			0.99	
Satd. Flow (prot)	1765	3482		1757	3430			3351			3433	
Flt Permitted	0.27	1.00		0.24	1.00			0.88			0.78	
Satd. Flow (perm)	504	3482		436	3430			2953			2716	
Volume (vph)	51	756	70	107	622	131	53	273	120	76	219	38
Peak-hour factor, PHF	0.99	0.99	0.99	0.99	0.99	0.99	0.99	0.99	0.99	0.99	0.99	0.99
Adj. Flow (vph)	52	764	71	108	628	132	54	276	121	77	221	38
RTOR Reduction (vph)	0	8	0	0	22	0	0	46	0	0	12	0
Lane Group Flow (vph)	52	827	0	108	738	0	0	405	0	0	324	0
Confl. Peds. (#/hr)	8		39	39		8			25	25		
Turn Type	Perm			Perm			Perm			Perm		
Protected Phases		4			8			2			6	
Permitted Phases	4			8			2			6		
Actuated Green, G (s)	35.5	35.5		35.5	35.5			38.0			38.0	
Effective Green, g (s)	35.0	35.0		35.0	35.0			37.0			37.0	
Actuated g/C Ratio	0.44	0.44		0.44	0.44			0.46			0.46	
Clearance Time (s)	3.5	3.5		3.5	3.5			3.0			3.0	
Lane Grp Cap (vph)	221	1523		191	1501			1366			1256	
v/s Ratio Prot		0.24			0.22							
v/s Ratio Perm	0.10			c0.25				c0.14			0.12	
v/c Ratio	0.24	0.54		0.57	0.49			0.30			0.26	
Uniform Delay, d1	14.1	16.6		16.8	16.1			13.4			13.1	
Progression Factor	0.93	1.07		1.31	1.41			0.83			1.00	
Incremental Delay, d2	1.7	0.9		11.2	1.1			0.5			0.5	
Delay (s)	14.8	18.7		33.3	23.8			11.6			13.6	
Level of Service	B	B		C	C			B			B	
Approach Delay (s)		18.5			25.0			11.6			13.6	
Approach LOS		B			C			B			B	

Intersection Summary			
HCM Average Control Delay	18.8	HCM Level of Service	B
HCM Volume to Capacity ratio	0.43		
Actuated Cycle Length (s)	80.0	Sum of lost time (s)	8.0
Intersection Capacity Utilization	87.1%	ICU Level of Service	E
Analysis Period (min)	15		
c Critical Lane Group			

Movement	EBT	EBR	WBL	WBT	NBL	NBR
Lane Configurations						
Ideal Flow (vphpl)	1900	1900	1900	1900	1900	1900
Total Lost time (s)	4.0		4.0	4.0	4.0	4.0
Lane Util. Factor	0.95		1.00	0.95	1.00	1.00
Frpb, ped/bikes	0.93		1.00	1.00	1.00	1.00
Flpb, ped/bikes	1.00		1.00	1.00	1.00	1.00
Frt	0.98		1.00	1.00	1.00	0.85
Flt Protected	1.00		0.95	1.00	0.95	1.00
Satd. Flow (prot)	3235		1770	3539	1770	1583
Flt Permitted	1.00		0.95	1.00	0.95	1.00
Satd. Flow (perm)	3235		1770	3539	1770	1583
Volume (vph)	840	119	55	737	126	47
Peak-hour factor, PHF	0.97	0.97	0.97	0.97	0.97	0.97
Adj. Flow (vph)	866	123	57	760	130	48
RTOR Reduction (vph)	0	0	0	0	0	0
Lane Group Flow (vph)	989	0	57	760	130	48
Confl. Peds. (#/hr)		213	348			
Turn Type			Prot			Perm
Protected Phases	4		3	8	2	
Permitted Phases						2
Actuated Green, G (s)	54.0		5.5	63.5	8.5	8.5
Effective Green, g (s)	54.0		5.5	63.5	8.5	8.5
Actuated g/C Ratio	0.68		0.07	0.79	0.11	0.11
Clearance Time (s)	4.0		4.0	4.0	4.0	4.0
Vehicle Extension (s)	3.0		3.0	3.0	3.0	3.0
Lane Grp Cap (vph)	2184		122	2809	188	168
v/s Ratio Prot	c0.31		c0.03	0.21	c0.07	
v/s Ratio Perm						0.03
v/c Ratio	0.45		0.47	0.27	0.69	0.29
Uniform Delay, d1	6.1		35.8	2.2	34.5	33.0
Progression Factor	0.53		0.87	1.56	0.95	0.92
Incremental Delay, d2	0.6		2.3	0.2	10.3	0.9
Delay (s)	3.8		33.5	3.6	43.1	31.4
Level of Service	A		C	A	D	C
Approach Delay (s)	3.8			5.7	40.0	
Approach LOS	A			A	D	

Intersection Summary			
HCM Average Control Delay	7.8	HCM Level of Service	A
HCM Volume to Capacity ratio	0.48		
Actuated Cycle Length (s)	80.0	Sum of lost time (s)	12.0
Intersection Capacity Utilization	48.3%	ICU Level of Service	A
Analysis Period (min)	15		
c Critical Lane Group			

Movement	EBL	EBT	EBR	WBL	WBT	WBR	NBL	NBT	NBR	SBL	SBT	SBR
Lane Configurations												
Ideal Flow (vphpl)	1900	1900	1900	1900	1900	1900	1900	1900	1900	1900	1900	1900
Total Lost time (s)	4.0	4.0		4.0	4.0		4.0	4.0		4.0	4.0	
Lane Util. Factor	1.00	0.95		1.00	0.95		1.00	0.95		1.00	0.95	
Frpb, ped/bikes	1.00	0.99		1.00	0.97		1.00	0.99		1.00	0.98	
Flpb, ped/bikes	0.93	1.00		0.98	1.00		1.00	1.00		1.00	1.00	
Frt	1.00	0.98		1.00	0.98		1.00	0.99		1.00	0.97	
Flt Protected	0.95	1.00		0.95	1.00		0.95	1.00		0.95	1.00	
Satd. Flow (prot)	1643	3419		1726	3368		1770	3466		1770	3364	
Flt Permitted	0.33	1.00		0.20	1.00		0.95	1.00		0.95	1.00	
Satd. Flow (perm)	567	3419		356	3368		1770	3466		1770	3364	
Volume (vph)	128	660	99	37	475	76	186	870	82	103	626	136
Peak-hour factor, PHF	0.98	0.98	0.98	0.98	0.98	0.98	0.98	0.98	0.98	0.98	0.98	0.98
Adj. Flow (vph)	131	673	101	38	485	78	190	888	84	105	639	139
RTOR Reduction (vph)	0	15	0	0	16	0	0	8	0	0	22	0
Lane Group Flow (vph)	131	759	0	38	547	0	190	964	0	105	756	0
Confl. Peds. (#/hr)	94		86	86		94			40			111
Turn Type	Perm			Perm			Prot			Prot		
Protected Phases		4			8		5	2		1	6	
Permitted Phases	4			8								
Actuated Green, G (s)	25.5	25.5		25.5	25.5		10.8	33.1		7.9	30.2	
Effective Green, g (s)	26.0	26.0		26.0	26.0		11.3	33.6		8.4	30.7	
Actuated g/C Ratio	0.32	0.32		0.32	0.32		0.14	0.42		0.11	0.38	
Clearance Time (s)	4.5	4.5		4.5	4.5		4.5	4.5		4.5	4.5	
Vehicle Extension (s)	2.0	2.0		2.0	2.0		2.0	2.0		2.0	2.0	
Lane Grp Cap (vph)	184	1111		116	1095		250	1456		186	1291	
v/s Ratio Prot		0.22			0.16		c0.11	c0.28		0.06	0.22	
v/s Ratio Perm	c0.23			0.11								
v/c Ratio	0.71	0.68		0.33	0.50		0.76	0.66		0.56	0.59	
Uniform Delay, d1	23.7	23.4		20.4	21.8		33.0	18.6		34.1	19.6	
Progression Factor	0.58	0.54		1.00	1.00		0.90	0.52		0.98	0.87	
Incremental Delay, d2	9.6	1.3		0.6	0.1		10.1	2.1		2.3	1.9	
Delay (s)	23.3	13.9		21.0	21.9		39.7	11.7		35.5	18.9	
Level of Service	C	B		C	C		D	B		D	B	
Approach Delay (s)		15.3			21.8			16.3			20.9	
Approach LOS		B			C			B			C	

Intersection Summary			
HCM Average Control Delay	18.1	HCM Level of Service	B
HCM Volume to Capacity ratio	0.71		
Actuated Cycle Length (s)	80.0	Sum of lost time (s)	12.0
Intersection Capacity Utilization	72.7%	ICU Level of Service	C
Analysis Period (min)	15		

c Critical Lane Group

Movement	WBL	WBR	NBT	NBR	SBL	SBT
Lane Configurations						
Sign Control	Stop		Free			Free
Grade	0%		0%			0%
Volume (veh/h)	7	33	1133	31	15	735
Peak Hour Factor	0.90	0.90	0.90	0.90	0.90	0.90
Hourly flow rate (vph)	8	37	1259	34	17	817
Pedestrians	52		52			45
Lane Width (ft)	12.0		12.0			12.0
Walking Speed (ft/s)	4.0		4.0			4.0
Percent Blockage	4		4			4
Right turn flare (veh)						
Median type	None					
Median storage veh)						
Upstream signal (ft)			230			503
pX, platoon unblocked	0.94	0.88			0.88	
vC, conflicting volume	1822	744			1345	
vC1, stage 1 conf vol						
vC2, stage 2 conf vol						
vCu, unblocked vol	1438	571			1255	
tC, single (s)	6.8	6.9			4.1	
tC, 2 stage (s)						
tF (s)	3.5	3.3			2.2	
p0 queue free %	92	90			96	
cM capacity (veh/h)	103	376			462	

Direction, Lane #	WB 1	NB 1	NB 2	SB 1	SB 2	SB 3
Volume Total	44	839	454	17	408	408
Volume Left	8	0	0	17	0	0
Volume Right	37	0	34	0	0	0
cSH	256	1700	1700	462	1700	1700
Volume to Capacity	0.17	0.49	0.27	0.04	0.24	0.24
Queue Length 95th (ft)	15	0	0	3	0	0
Control Delay (s)	22.0	0.0	0.0	13.1	0.0	0.0
Lane LOS	C			B		
Approach Delay (s)	22.0	0.0		0.3		
Approach LOS	C					

Intersection Summary			
Average Delay	0.6		
Intersection Capacity Utilization	50.7%	ICU Level of Service	A
Analysis Period (min)	15		

Movement	EBL	EBT	EBR	WBL	WBT	WBR	NBL	NBT	NBR	SBL	SBT	SBR
Lane Configurations												
Ideal Flow (vphpl)	1900	1900	1900	1900	1900	1900	1900	1900	1900	1900	1900	1900
Total Lost time (s)		4.0		4.0	4.0			4.0		4.0	4.0	
Lane Util. Factor		0.91		1.00	0.95			1.00		1.00	1.00	
Frpb, ped/bikes		1.00		1.00	0.98			0.98		1.00	0.99	
Flpb, ped/bikes		1.00		0.97	1.00			0.99		0.97	1.00	
Frt		0.99		1.00	0.95			0.98		1.00	0.99	
Flt Protected		0.99		0.95	1.00			0.99		0.95	1.00	
Satd. Flow (prot)		4985		1719	3288			1766		1714	1832	
Flt Permitted		0.80		0.32	1.00			0.82		0.27	1.00	
Satd. Flow (perm)		3998		588	3288			1449		482	1832	
Volume (vph)	112	633	27	64	327	168	58	364	84	65	288	20
Peak-hour factor, PHF	0.98	0.98	0.98	0.98	0.98	0.98	0.98	0.98	0.98	0.98	0.98	0.98
Adj. Flow (vph)	114	646	28	65	334	171	59	371	86	66	294	20
RTOR Reduction (vph)	0	5	0	0	38	0	0	9	0	0	3	0
Lane Group Flow (vph)	0	783	0	65	467	0	0	507	0	66	311	0
Confl. Peds. (#/hr)	100		100	100		100	100		100	100		100
Turn Type	Perm			Perm			Perm			Perm		
Protected Phases		4			8			2			6	
Permitted Phases	4			8			2			6		
Actuated Green, G (s)		46.0		46.0	46.0			24.0		24.0	24.0	
Effective Green, g (s)		47.0		47.0	47.0			25.0		25.0	25.0	
Actuated g/C Ratio		0.59		0.59	0.59			0.31		0.31	0.31	
Clearance Time (s)		5.0		5.0	5.0			5.0		5.0	5.0	
Lane Grp Cap (vph)		2349		345	1932			453		151	573	
v/s Ratio Prot					0.14						0.17	
v/s Ratio Perm		c0.20		0.11				c0.35		0.14		
v/c Ratio		0.33		0.19	0.24			1.12		0.44	0.54	
Uniform Delay, d1		8.5		7.7	7.9			27.5		21.9	22.8	
Progression Factor		1.00		1.34	1.35			1.00		0.75	0.75	
Incremental Delay, d2		0.4		1.2	0.3			79.0		8.7	3.6	
Delay (s)		8.8		11.4	11.0			106.5		25.1	20.6	
Level of Service		A		B	B			F		C	C	
Approach Delay (s)		8.8			11.1			106.5			21.4	
Approach LOS		A			B			F			C	

Intersection Summary			
HCM Average Control Delay	33.9	HCM Level of Service	C
HCM Volume to Capacity ratio	0.61		
Actuated Cycle Length (s)	80.0	Sum of lost time (s)	8.0
Intersection Capacity Utilization	138.5%	ICU Level of Service	H
Analysis Period (min)	15		
c Critical Lane Group			

Movement	EBL	EBT	EBR	WBL	WBT	WBR	NBL	NBT	NBR	SBL	SBT	SBR
Lane Configurations												
Ideal Flow (vphpl)	1900	1900	1900	1900	1900	1900	1900	1900	1900	1900	1900	1900
Total Lost time (s)		4.0			4.0		4.0	4.0		4.0	4.0	
Lane Util. Factor		0.91			0.91		1.00	1.00		1.00	1.00	
Frpb, ped/bikes		0.99			0.99		1.00	0.97		1.00	0.98	
Flpb, ped/bikes		1.00			0.99		0.91	1.00		0.94	1.00	
Frt		0.99			0.98		1.00	0.96		1.00	0.98	
Flt Protected		1.00			0.99		0.95	1.00		0.95	1.00	
Satd. Flow (prot)		4970			4883		1606	1733		1659	1800	
Flt Permitted		0.88			0.80		0.62	1.00		0.35	1.00	
Satd. Flow (perm)		4398			3935		1054	1733		619	1800	
Volume (vph)	39	573	40	68	405	64	41	212	73	56	122	17
Peak-hour factor, PHF	0.95	0.95	0.95	0.95	0.95	0.95	0.95	0.95	0.95	0.95	0.95	0.95
Adj. Flow (vph)	41	603	42	72	426	67	43	223	77	59	128	18
RTOR Reduction (vph)	0	9	0	0	21	0	0	16	0	0	7	0
Lane Group Flow (vph)	0	677	0	0	544	0	43	284	0	59	139	0
Confl. Peds. (#/hr)	100		100	100		100	100		100	100		100
Turn Type	Perm			Perm			Perm			Perm		
Protected Phases		4			8			2			6	
Permitted Phases	4			8			2			6		
Actuated Green, G (s)		51.5			51.5		20.5	20.5		20.5	20.5	
Effective Green, g (s)		51.5			51.5		20.5	20.5		20.5	20.5	
Actuated g/C Ratio		0.64			0.64		0.26	0.26		0.26	0.26	
Clearance Time (s)		4.0			4.0		4.0	4.0		4.0	4.0	
Lane Grp Cap (vph)		2831			2533		270	444		159	461	
v/s Ratio Prot								c0.16			0.08	
v/s Ratio Perm		c0.15			0.14		0.04			0.10		
v/c Ratio		0.24			0.21		0.16	0.64		0.37	0.30	
Uniform Delay, d1		6.0			5.9		23.1	26.5		24.5	24.0	
Progression Factor		1.25			1.16		1.00	1.00		1.21	1.23	
Incremental Delay, d2		0.2			0.2		1.3	6.9		6.3	1.6	
Delay (s)		7.7			7.0		24.3	33.4		36.0	31.1	
Level of Service		A			A		C	C		D	C	
Approach Delay (s)		7.7			7.0			32.3			32.5	
Approach LOS		A			A			C			C	

Intersection Summary			
HCM Average Control Delay	15.0	HCM Level of Service	B
HCM Volume to Capacity ratio	0.35		
Actuated Cycle Length (s)	80.0	Sum of lost time (s)	8.0
Intersection Capacity Utilization	87.1%	ICU Level of Service	E
Analysis Period (min)	15		
c Critical Lane Group			

Movement	EBL	EBT	EBR	WBL	WBT	WBR	NBL	NBT	NBR	SBL	SBT	SBR
Lane Configurations												
Ideal Flow (vphpl)	1900	1900	1900	1900	1900	1900	1900	1900	1900	1900	1900	1900
Total Lost time (s)		4.0			4.0			4.0			4.0	
Lane Util. Factor		0.91			0.91			0.95			0.95	
Frpb, ped/bikes		1.00			1.00			0.99			1.00	
Flpb, ped/bikes		1.00			1.00			1.00			1.00	
Frt		0.99			0.96			0.96			0.98	
Flt Protected		1.00			1.00			0.99			0.99	
Satd. Flow (prot)		5019			4820			3363			3378	
Flt Permitted		0.83			0.85			0.86			0.73	
Satd. Flow (perm)		4181			4114			2901			2505	
Volume (vph)	64	624	34	48	423	195	39	182	72	121	213	66
Peak-hour factor, PHF	0.99	0.99	0.99	0.99	0.99	0.99	0.99	0.99	0.99	0.99	0.99	0.99
Adj. Flow (vph)	65	630	34	48	427	197	39	184	73	122	215	67
RTOR Reduction (vph)	0	6	0	0	70	0	0	39	0	0	21	0
Lane Group Flow (vph)	0	723	0	0	602	0	0	257	0	0	383	0
Confl. Peds. (#/hr)	9		17	17		9	12		10	10		12
Turn Type	Perm			Perm			Perm			Perm		
Protected Phases		4			8			2			6	
Permitted Phases	4			8			2			6		
Actuated Green, G (s)		50.0			50.0			19.0			19.0	
Effective Green, g (s)		51.5			51.5			20.5			20.5	
Actuated g/C Ratio		0.64			0.64			0.26			0.26	
Clearance Time (s)		5.5			5.5			5.5			5.5	
Lane Grp Cap (vph)		2692			2648			743			642	
v/s Ratio Prot												
v/s Ratio Perm		c0.17			0.15			0.09			c0.15	
v/c Ratio		0.27			0.23			0.35			0.60	
Uniform Delay, d1		6.1			5.9			24.3			26.1	
Progression Factor		1.49			1.25			1.00			0.76	
Incremental Delay, d2		0.2			0.2			1.3			4.0	
Delay (s)		9.4			7.6			25.5			23.8	
Level of Service		A			A			C			C	
Approach Delay (s)		9.4			7.6			25.5			23.8	
Approach LOS		A			A			C			C	

Intersection Summary			
HCM Average Control Delay	13.9	HCM Level of Service	B
HCM Volume to Capacity ratio	0.36		
Actuated Cycle Length (s)	80.0	Sum of lost time (s)	8.0
Intersection Capacity Utilization	94.8%	ICU Level of Service	F
Analysis Period (min)	15		
c Critical Lane Group			

Movement	EBL	EBT	EBR	WBL	WBT	WBR	NBL	NBT	NBR	SBL	SBT	SBR
Lane Configurations												
Ideal Flow (vphpl)	1900	1900	1900	1900	1900	1900	1900	1900	1900	1900	1900	1900
Total Lost time (s)		4.0			4.0			4.0			4.0	
Lane Util. Factor		0.91			0.91			1.00			1.00	
Frpb, ped/bikes		1.00			0.99			1.00			0.95	
Flpb, ped/bikes		1.00			1.00			1.00			1.00	
Frt		1.00			0.98			0.93			0.92	
Flt Protected		1.00			1.00			0.98			0.98	
Satd. Flow (prot)		5052			4934			1695			1601	
Flt Permitted		0.83			0.92			0.85			0.86	
Satd. Flow (perm)		4214			4555			1473			1407	
Volume (vph)	80	766	10	10	477	57	10	0	10	128	0	193
Peak-hour factor, PHF	0.96	0.96	0.92	0.92	0.96	0.96	0.92	0.92	0.92	0.96	0.92	0.96
Adj. Flow (vph)	83	798	11	11	497	59	11	0	11	133	0	201
RTOR Reduction (vph)	0	1	0	0	0	0	0	8	0	0	0	0
Lane Group Flow (vph)	0	891	0	0	567	0	0	14	0	0	334	0
Confl. Peds. (#/hr)						79						79
Turn Type	Perm			Perm			Perm			Perm		
Protected Phases		4			8			2			6	
Permitted Phases	4			8			2			6		
Actuated Green, G (s)		49.0			49.0			23.0			23.0	
Effective Green, g (s)		49.0			49.0			23.0			23.0	
Actuated g/C Ratio		0.61			0.61			0.29			0.29	
Clearance Time (s)		4.0			4.0			4.0			4.0	
Vehicle Extension (s)		3.0			3.0			3.0			3.0	
Lane Grp Cap (vph)		2581			2790			423			405	
v/s Ratio Prot												
v/s Ratio Perm		c0.21			0.12			0.01			c0.24	
v/c Ratio		0.35			0.20			0.03			0.82	
Uniform Delay, d1		7.6			6.9			20.5			26.6	
Progression Factor		0.67			1.00			1.00			0.95	
Incremental Delay, d2		0.4			0.2			0.0			12.7	
Delay (s)		5.5			7.0			20.5			38.1	
Level of Service		A			A			C			D	
Approach Delay (s)		5.5			7.0			20.5			38.1	
Approach LOS		A			A			C			D	

Intersection Summary			
HCM Average Control Delay	12.1	HCM Level of Service	B
HCM Volume to Capacity ratio	0.50		
Actuated Cycle Length (s)	80.0	Sum of lost time (s)	8.0
Intersection Capacity Utilization	65.2%	ICU Level of Service	C
Analysis Period (min)	15		
c Critical Lane Group			

Movement	EBL	EBT	EBR	WBL	WBT	WBR	NBL	NBT	NBR	SBL	SBT	SBR
Lane Configurations												
Ideal Flow (vphpl)	1900	1900	1900	1900	1900	1900	1900	1900	1900	1900	1900	1900
Total Lost time (s)		4.0			4.0		4.0	4.0		4.0	4.0	
Lane Util. Factor		0.91			0.91		1.00	0.95		1.00	0.95	
Frpb, ped/bikes		1.00			0.99		1.00	0.99		1.00	1.00	
Flpb, ped/bikes		1.00			1.00		0.98	1.00		0.97	1.00	
Frt		0.99			0.95		1.00	0.98		1.00	0.99	
Flt Protected		0.99			1.00		0.95	1.00		0.95	1.00	
Satd. Flow (prot)		4924			4746		1740	3427		1725	3484	
Flt Permitted		0.67			0.68		0.36	1.00		0.26	1.00	
Satd. Flow (perm)		3326			3266		664	3427		477	3484	
Volume (vph)	227	594	81	61	358	197	100	742	98	135	570	46
Peak-hour factor, PHF	0.90	0.90	0.90	0.90	0.90	0.90	0.90	0.90	0.90	0.90	0.90	0.90
Adj. Flow (vph)	252	660	90	68	398	219	111	824	109	150	633	51
RTOR Reduction (vph)	0	12	0	0	14	0	0	5	0	0	3	0
Lane Group Flow (vph)	0	990	0	0	671	0	111	928	0	150	681	0
Confl. Peds. (#/hr)	26		19			26	39		92	92		39
Turn Type	Perm			pm+pt			Perm			Perm		
Protected Phases		4		3	8			2			6	
Permitted Phases	4			8			2			6		
Actuated Green, G (s)		26.5			26.5		66.0	66.0		66.0	66.0	
Effective Green, g (s)		28.0			28.0		67.0	67.0		67.0	67.0	
Actuated g/C Ratio		0.27			0.27		0.65	0.65		0.65	0.65	
Clearance Time (s)		5.5			5.5		5.0	5.0		5.0	5.0	
Vehicle Extension (s)		2.0			2.0		2.0	2.0		2.0	2.0	
Lane Grp Cap (vph)		904			888		432	2229		310	2266	
v/s Ratio Prot								0.27			0.20	
v/s Ratio Perm		c0.30			0.21		0.17			c0.31		
v/c Ratio		1.25dl			0.88dl		0.26	0.42		0.48	0.30	
Uniform Delay, d1		37.5			34.4		7.6	8.6		9.2	7.8	
Progression Factor		1.00			1.00		1.00	1.00		1.00	1.00	
Incremental Delay, d2		59.5			3.3		1.4	0.6		5.3	0.3	
Delay (s)		97.0			37.7		9.0	9.2		14.5	8.2	
Level of Service		F			D		A	A		B	A	
Approach Delay (s)		97.0			37.7			9.2			9.3	
Approach LOS		F			D			A			A	

Intersection Summary			
HCM Average Control Delay	39.4	HCM Level of Service	D
HCM Volume to Capacity ratio	0.66		
Actuated Cycle Length (s)	103.0	Sum of lost time (s)	8.0
Intersection Capacity Utilization	80.4%	ICU Level of Service	D
Analysis Period (min)	15		

dl Defacto Left Lane. Recode with 1 though lane as a left lane.
c Critical Lane Group

Movement	EBL	EBT	EBR	WBL	WBT	WBR	NBL	NBT	NBR	SBL	SBT	SBR
Lane Configurations												
Ideal Flow (vphpl)	1900	1900	1900	1900	1900	1900	1900	1900	1900	1900	1900	1900
Total Lost time (s)		4.0			4.0			4.0	4.0		4.0	
Lane Util. Factor		0.91			0.91			1.00	1.00		1.00	
Frpb, ped/bikes		1.00			1.00			1.00	0.89		0.94	
Flpb, ped/bikes		1.00			1.00			0.97	1.00		0.98	
Frt		0.99			0.99			1.00	0.85		0.93	
Flt Protected		1.00			0.99			0.98	1.00		0.99	
Satd. Flow (prot)		5022			4982			1777	1406		1583	
Flt Permitted		0.89			0.77			0.86	1.00		0.92	
Satd. Flow (perm)		4498			3869			1561	1406		1466	
Volume (vph)	36	771	30	82	531	28	53	92	191	33	33	68
Peak-hour factor, PHF	0.99	0.99	0.99	0.99	0.99	0.99	0.99	0.99	0.99	0.99	0.99	0.99
Adj. Flow (vph)	36	779	30	83	536	28	54	93	193	33	33	69
RTOR Reduction (vph)	0	5	0	0	6	0	0	0	93	0	47	0
Lane Group Flow (vph)	0	840	0	0	641	0	0	147	100	0	88	0
Confl. Peds. (#/hr)	100		100	100		100	100		100	100		100
Turn Type	Perm			Perm			Perm		Perm	Perm		
Protected Phases		4			8			2			6	
Permitted Phases	4			8			2		2	6		
Actuated Green, G (s)		49.5			49.5			24.5	24.5		24.5	
Effective Green, g (s)		48.5			48.5			23.5	23.5		23.5	
Actuated g/C Ratio		0.61			0.61			0.29	0.29		0.29	
Clearance Time (s)		3.0			3.0			3.0	3.0		3.0	
Lane Grp Cap (vph)		2727			2346			459	413		431	
v/s Ratio Prot												
v/s Ratio Perm		c0.19			0.17			c0.09	0.07		0.06	
v/c Ratio		0.31			0.27			0.32	0.24		0.20	
Uniform Delay, d1		7.6			7.4			22.0	21.5		21.2	
Progression Factor		1.00			1.00			1.00	1.00		1.00	
Incremental Delay, d2		0.3			0.3			1.8	1.4		1.1	
Delay (s)		7.9			7.7			23.9	22.9		22.3	
Level of Service		A			A			C	C		C	
Approach Delay (s)		7.9			7.7			23.3			22.3	
Approach LOS		A			A			C			C	

Intersection Summary			
HCM Average Control Delay	11.5	HCM Level of Service	B
HCM Volume to Capacity ratio	0.31		
Actuated Cycle Length (s)	80.0	Sum of lost time (s)	8.0
Intersection Capacity Utilization	96.6%	ICU Level of Service	F
Analysis Period (min)	15		

c Critical Lane Group

Movement	EBL	EBT	EBR	WBL	WBT	WBR	NBL	NBT	NBR	SBL	SBT	SBR
Lane Configurations												
Ideal Flow (vphpl)	1900	1900	1900	1900	1900	1900	1900	1900	1900	1900	1900	1900
Total Lost time (s)	4.0	4.0		4.0	4.0		4.0	4.0		4.0	4.0	
Lane Util. Factor	1.00	0.91		1.00	0.91		1.00	0.91		1.00	0.91	
Frpb, ped/bikes	1.00	0.99		1.00	0.99		1.00	0.99		1.00	0.99	
Flpb, ped/bikes	1.00	1.00		1.00	1.00		1.00	1.00		1.00	1.00	
Frt	1.00	0.98		1.00	0.95		1.00	0.98		1.00	0.98	
Flt Protected	0.95	1.00		0.95	1.00		0.95	1.00		0.95	1.00	
Satd. Flow (prot)	1770	4940		1770	4743		1770	4932		1770	4933	
Flt Permitted	0.95	1.00		0.95	1.00		0.95	1.00		0.95	1.00	
Satd. Flow (perm)	1770	4940		1770	4743		1770	4932		1770	4933	
Volume (vph)	187	690	84	81	377	210	167	653	106	307	377	63
Peak-hour factor, PHF	0.91	0.91	0.91	0.91	0.91	0.91	0.91	0.91	0.91	0.91	0.91	0.91
Adj. Flow (vph)	205	758	92	89	414	231	184	718	116	337	414	69
RTOR Reduction (vph)	0	15	0	0	100	0	0	22	0	0	23	0
Lane Group Flow (vph)	205	835	0	89	545	0	184	812	0	337	460	0
Confl. Peds. (#/hr)			81			22			50			43
Turn Type	Prot			Prot			Prot			Prot		
Protected Phases	3	4		3	4		1	2		1	2	
Permitted Phases												
Actuated Green, G (s)	11.0	24.1		11.0	24.1		20.9	26.0		20.9	26.0	
Effective Green, g (s)	11.0	25.1		11.0	25.1		20.9	27.0		20.9	27.0	
Actuated g/C Ratio	0.11	0.25		0.11	0.25		0.21	0.27		0.21	0.27	
Clearance Time (s)	4.0	5.0		4.0	5.0		4.0	5.0		4.0	5.0	
Vehicle Extension (s)	2.0	2.0		2.0	2.0		2.0	2.0		2.0	2.0	
Lane Grp Cap (vph)	195	1240		195	1190		370	1332		370	1332	
v/s Ratio Prot	c0.12	c0.17		0.05	0.11		0.10	c0.16		c0.19	0.09	
v/s Ratio Perm												
v/c Ratio	1.05	0.67		0.46	0.46		0.50	0.61		0.91	0.35	
Uniform Delay, d1	44.5	33.8		41.7	31.7		34.9	31.9		38.6	29.4	
Progression Factor	1.00	1.00		1.00	1.00		1.00	1.00		1.00	1.00	
Incremental Delay, d2	78.6	2.9		0.6	1.3		0.4	2.1		25.5	0.7	
Delay (s)	123.1	36.7		42.3	33.0		35.3	34.0		64.1	30.1	
Level of Service	F	D		D	C		D	C		E	C	
Approach Delay (s)		53.5			34.1			34.2			44.1	
Approach LOS		D			C			C			D	

Intersection Summary			
HCM Average Control Delay	42.0	HCM Level of Service	D
HCM Volume to Capacity ratio	0.76		
Actuated Cycle Length (s)	100.0	Sum of lost time (s)	16.0
Intersection Capacity Utilization	81.5%	ICU Level of Service	D
Analysis Period (min)	15		

c Critical Lane Group

Movement	EBL	EBT	EBR	WBL	WBT	WBR	NBL	NBT	NBR	SBL	SBT	SBR
Lane Configurations												
Ideal Flow (vphpl)	1900	1900	1900	1900	1900	1900	1900	1900	1900	1900	1900	1900
Total Lost time (s)		4.0			4.0		4.0	4.0		4.0	4.0	
Lane Util. Factor		1.00			1.00		1.00	0.95		1.00	0.95	
Frpb, ped/bikes		0.94			0.97		1.00	0.99		1.00	0.99	
Flpb, ped/bikes		0.96			0.97		0.95	1.00		0.93	1.00	
Frt		0.95			0.96		1.00	0.99		1.00	0.99	
Flt Protected		0.98			0.99		0.95	1.00		0.95	1.00	
Satd. Flow (prot)		1563			1657		1688	3469		1646	3454	
Flt Permitted		0.71			0.84		0.30	1.00		0.41	1.00	
Satd. Flow (perm)		1132			1418		537	3469		705	3454	
Volume (vph)	97	33	65	42	59	38	40	552	35	32	765	59
Peak-hour factor, PHF	0.94	0.94	0.94	0.94	0.94	0.94	0.94	0.94	0.94	0.94	0.94	0.94
Adj. Flow (vph)	103	35	69	45	63	40	43	587	37	34	814	63
RTOR Reduction (vph)	0	24	0	0	18	0	0	4	0	0	5	0
Lane Group Flow (vph)	0	183	0	0	130	0	43	620	0	34	872	0
Confl. Peds. (#/hr)	100		100	100		100	100		100	100		100
Turn Type	Perm			Perm			Perm			Perm		
Protected Phases		4			4			2			6	
Permitted Phases	4			4			2			6		
Actuated Green, G (s)		16.1			16.1		61.9	61.9		61.9	61.9	
Effective Green, g (s)		15.6			15.6		61.4	61.4		61.4	61.4	
Actuated g/C Ratio		0.18			0.18		0.72	0.72		0.72	0.72	
Clearance Time (s)		3.5			3.5		3.5	3.5		3.5	3.5	
Vehicle Extension (s)		2.0			2.0		2.0	2.0		2.0	2.0	
Lane Grp Cap (vph)		208			260		388	2506		509	2495	
v/s Ratio Prot								0.18			c0.25	
v/s Ratio Perm		c0.16			0.09		0.08			0.05		
v/c Ratio		0.88			0.50		0.11	0.25		0.07	0.35	
Uniform Delay, d1		33.8			31.2		3.6	4.0		3.4	4.4	
Progression Factor		1.00			1.00		1.00	1.00		1.00	1.00	
Incremental Delay, d2		30.5			0.6		0.6	0.2		0.3	0.4	
Delay (s)		64.3			31.7		4.1	4.2		3.7	4.8	
Level of Service		E			C		A	A		A	A	
Approach Delay (s)		64.3			31.7			4.2			4.7	
Approach LOS		E			C			A			A	

Intersection Summary			
HCM Average Control Delay	13.0	HCM Level of Service	B
HCM Volume to Capacity ratio	0.46		
Actuated Cycle Length (s)	85.0	Sum of lost time (s)	8.0
Intersection Capacity Utilization	57.6%	ICU Level of Service	B
Analysis Period (min)	15		

c Critical Lane Group

Movement	EBL	EBT	EBR	WBL	WBT	WBR	NBL	NBT	NBR	SBL	SBT	SBR
Lane Configurations												
Ideal Flow (vphpl)	1900	1900	1900	1900	1900	1900	1900	1900	1900	1900	1900	1900
Total Lost time (s)	4.0	4.0		4.0	4.0		4.0	4.0		4.0	4.0	
Lane Util. Factor	1.00	0.95		1.00	0.95		1.00	0.95		1.00	0.95	
Frpb, ped/bikes	1.00	0.97		1.00	0.95		1.00	0.99		1.00	0.93	
Flpb, ped/bikes	1.00	1.00		1.00	1.00		0.96	1.00		0.96	1.00	
Frt	1.00	0.96		1.00	0.97		1.00	0.99		1.00	0.94	
Flt Protected	0.95	1.00		0.95	1.00		0.95	1.00		0.95	1.00	
Satd. Flow (prot)	1770	3308		1770	3254		1690	3490		1696	3118	
Flt Permitted	0.95	1.00		0.95	1.00		0.29	1.00		0.41	1.00	
Satd. Flow (perm)	1770	3308		1770	3254		520	3490		739	3118	
Volume (vph)	127	316	100	56	383	114	113	507	29	105	482	294
Peak-hour factor, PHF	0.98	0.98	0.98	0.98	0.98	0.98	0.98	0.98	0.98	0.98	0.98	0.98
Adj. Flow (vph)	130	322	102	57	391	116	115	517	30	107	492	300
RTOR Reduction (vph)	0	36	0	0	35	0	0	4	0	0	94	0
Lane Group Flow (vph)	130	388	0	57	472	0	115	543	0	107	698	0
Confl. Peds. (#/hr)			100			100	100		100	100		100
Turn Type	Prot			Prot			Perm			Perm		
Protected Phases	7	4		3	8			2			6	
Permitted Phases							2			6		
Actuated Green, G (s)	9.2	22.0		5.1	17.9		44.4	44.4		44.4	44.4	
Effective Green, g (s)	9.7	21.5		5.6	17.4		45.9	45.9		45.9	45.9	
Actuated g/C Ratio	0.11	0.25		0.07	0.20		0.54	0.54		0.54	0.54	
Clearance Time (s)	4.5	3.5		4.5	3.5		5.5	5.5		5.5	5.5	
Vehicle Extension (s)	2.0	2.0		2.0	2.0		2.0	2.0		2.0	2.0	
Lane Grp Cap (vph)	202	837		117	666		281	1885		399	1684	
v/s Ratio Prot	c0.07	0.12		0.03	c0.15			0.16			c0.22	
v/s Ratio Perm							0.22			0.14		
v/c Ratio	0.64	0.46		0.49	0.71		0.41	0.29		0.27	0.41	
Uniform Delay, d1	36.0	26.9		38.3	31.4		11.5	10.6		10.5	11.6	
Progression Factor	1.00	1.00		1.00	1.00		1.00	1.00		1.00	1.00	
Incremental Delay, d2	5.2	0.1		1.2	2.8		4.4	0.4		1.6	0.8	
Delay (s)	41.2	27.0		39.5	34.3		15.9	11.0		12.2	12.3	
Level of Service	D	C		D	C		B	B		B	B	
Approach Delay (s)		30.3			34.8			11.9			12.3	
Approach LOS		C			C			B			B	

Intersection Summary			
HCM Average Control Delay	20.7	HCM Level of Service	C
HCM Volume to Capacity ratio	0.51		
Actuated Cycle Length (s)	85.0	Sum of lost time (s)	12.0
Intersection Capacity Utilization	69.9%	ICU Level of Service	C
Analysis Period (min)	15		

c Critical Lane Group

Movement	EBL	EBR	NBL	NBT	SBT	SBR
Lane Configurations						
Ideal Flow (vphpl)	1900	1900	1900	1900	1900	1900
Total Lost time (s)	4.0		4.0	4.0	4.0	
Lane Util. Factor	1.00		1.00	0.95	0.95	
Frpb, ped/bikes	0.92		1.00	1.00	0.94	
Flpb, ped/bikes	1.00		1.00	1.00	1.00	
Frt	0.91		1.00	1.00	0.97	
Flt Protected	0.98		0.95	1.00	1.00	
Satd. Flow (prot)	1529		1770	3539	3244	
Flt Permitted	0.98		0.95	1.00	1.00	
Satd. Flow (perm)	1529		1770	3539	3244	
Volume (vph)	44	96	100	1069	615	127
Peak-hour factor, PHF	0.96	0.96	0.96	0.96	0.96	0.96
Adj. Flow (vph)	46	100	104	1114	641	132
RTOR Reduction (vph)	70	0	0	0	20	0
Lane Group Flow (vph)	76	0	104	1114	753	0
Confl. Peds. (#/hr)	100	100	100			100
Turn Type			Prot			
Protected Phases	2		3	8	4	
Permitted Phases						
Actuated Green, G (s)	24.2		8.5	47.8	35.3	
Effective Green, g (s)	24.2		8.5	47.8	35.3	
Actuated g/C Ratio	0.30		0.11	0.60	0.44	
Clearance Time (s)	4.0		4.0	4.0	4.0	
Vehicle Extension (s)	3.0		3.0	3.0	3.0	
Lane Grp Cap (vph)	463		188	2115	1431	
v/s Ratio Prot	c0.05		0.06	c0.31	0.23	
v/s Ratio Perm						
v/c Ratio	0.16		0.55	0.53	0.53	
Uniform Delay, d1	20.5		33.9	9.5	16.3	
Progression Factor	1.00		1.00	1.00	0.81	
Incremental Delay, d2	0.8		3.5	0.2	1.1	
Delay (s)	21.2		37.4	9.7	14.3	
Level of Service	C		D	A	B	
Approach Delay (s)	21.2			12.1	14.3	
Approach LOS	C			B	B	

Intersection Summary			
HCM Average Control Delay	13.5	HCM Level of Service	B
HCM Volume to Capacity ratio	0.41		
Actuated Cycle Length (s)	80.0	Sum of lost time (s)	8.0
Intersection Capacity Utilization	55.9%	ICU Level of Service	B
Analysis Period (min)	15		

c Critical Lane Group

APPENDIX P:
YEAR 2015 PLUS TOWER ALTERNATIVE
INTERSECTION LEVEL OF SERVICE CALCULATION WORKSHEETS

HCM Signalized Intersection Capacity Analysis
1: 52nd St. & Shattuck Ave.

2015 AM + Tower
1/21/2008

Movement	EBL	EBT	EBR	WBL	WBT	WBR	NBL	NBT	NBR	SBL	SBT	SBR
Lane Configurations												
Ideal Flow (vphpl)	1900	1900	1900	1900	1900	1900	1900	1900	1900	1900	1900	1900
Lane Width	12	12	12	12	12	12	16	16	16	16	16	16
Total Lost time (s)	4.0	4.0		4.0	4.0		2.0	2.0		2.0	2.0	
Lane Util. Factor	1.00	0.91		1.00	0.91		1.00	1.00		1.00	1.00	
Frpb, ped/bikes	1.00	0.99		1.00	0.99		1.00	0.99		1.00	0.98	
Flpb, ped/bikes	1.00	1.00		1.00	1.00		1.00	1.00		0.99	1.00	
Frt	1.00	0.97		1.00	0.98		1.00	0.97		1.00	0.94	
Flt Protected	0.95	1.00		0.95	1.00		0.95	1.00		0.95	1.00	
Satd. Flow (prot)	1770	4906		1770	4953		2006	2043		1985	1956	
Flt Permitted	0.95	1.00		0.95	1.00		0.10	1.00		0.44	1.00	
Satd. Flow (perm)	1770	4906		1770	4953		201	2043		925	1956	
Volume (vph)	300	951	206	90	1330	200	200	291	60	160	416	270
Peak-hour factor, PHF	0.95	0.95	0.95	0.95	0.95	0.95	0.95	0.95	0.95	0.95	0.95	0.95
Adj. Flow (vph)	316	1001	217	95	1400	211	211	306	63	168	438	284
RTOR Reduction (vph)	0	26	0	0	16	0	0	6	0	0	19	0
Lane Group Flow (vph)	316	1192	0	95	1595	0	211	363	0	168	703	0
Confl. Peds. (#/hr)			10	10		10	10		10	10		10
Turn Type	Prot			Prot			pm+pt			Perm		
Protected Phases	7	4		3	8		5	2			6	
Permitted Phases							2			6		
Actuated Green, G (s)	17.0	49.4		11.6	44.0		48.5	48.5		39.5	39.5	
Effective Green, g (s)	17.0	49.4		11.6	44.0		49.0	49.0		40.0	40.0	
Actuated g/C Ratio	0.14	0.41		0.10	0.37		0.41	0.41		0.33	0.33	
Clearance Time (s)	4.0	4.0		4.0	4.0		4.0	2.5		2.5	2.5	
Vehicle Extension (s)	3.0	3.0		3.0	3.0		3.0	3.0		3.0	3.0	
Lane Grp Cap (vph)	251	2020		171	1816		187	834		308	652	
v/s Ratio Prot	c0.18	0.24		0.05	c0.32		c0.07	0.18			c0.36	
v/s Ratio Perm							0.39			0.18		
v/c Ratio	1.26	0.59		0.56	0.88		1.13	0.44		0.55	1.08	
Uniform Delay, d1	51.5	27.4		51.7	35.5		58.7	25.5		32.6	40.0	
Progression Factor	1.00	1.00		1.00	1.00		1.00	1.00		1.00	1.00	
Incremental Delay, d2	144.6	1.3		3.9	6.4		104.5	0.4		2.0	58.0	
Delay (s)	196.1	28.7		55.6	41.9		163.2	25.9		34.6	98.0	
Level of Service	F	C		E	D		F	C		C	F	
Approach Delay (s)		63.2			42.7			75.9			86.1	
Approach LOS		E			D			E			F	

Intersection Summary			
HCM Average Control Delay	61.6	HCM Level of Service	E
HCM Volume to Capacity ratio	1.02		
Actuated Cycle Length (s)	120.0	Sum of lost time (s)	12.0
Intersection Capacity Utilization	110.1%	ICU Level of Service	H
Analysis Period (min)	15		

c Critical Lane Group

HCM Signalized Intersection Capacity Analysis
2: 52nd St. & Telegraph Ave.

2015 AM + Tower
1/21/2008

Movement	EBL	EBT	EBR	WBL	WBT	WBR	NBL	NBT	NBR	SBL	SBT	SBR
Lane Configurations												
Ideal Flow (vphpl)	1900	1900	1900	1900	1900	1900	1900	1900	1900	1900	1900	1900
Total Lost time (s)		4.0		4.0	4.0			4.0		4.0	4.0	
Lane Util. Factor		1.00		0.95	0.95			0.95		1.00	0.95	
Frpb, ped/bikes		1.00		1.00	0.99			0.99		1.00	0.96	
Flpb, ped/bikes		1.00		1.00	1.00			1.00		1.00	1.00	
Frt		0.95		1.00	0.91			0.97		1.00	0.96	
Flt Protected		0.98		0.95	1.00			1.00		0.95	1.00	
Satd. Flow (prot)		1748		1681	1596			3420		1770	3268	
Flt Permitted		0.48		0.74	1.00			0.93		0.95	1.00	
Satd. Flow (perm)		846		1302	1596			3197		1770	3268	
Volume (vph)	10	10	10	174	110	160	10	1161	237	100	1150	450
Peak-hour factor, PHF	0.95	0.95	0.95	0.95	0.95	0.95	0.95	0.95	0.95	0.95	0.95	0.95
Adj. Flow (vph)	11	11	11	183	116	168	11	1222	249	105	1211	474
RTOR Reduction (vph)	0	10	0	0	68	0	0	14	0	0	33	0
Lane Group Flow (vph)	0	23	0	183	216	0	0	1468	0	105	1652	0
Confl. Peds. (#/hr)	4					4	44		12			44
Turn Type	Perm			Perm			Perm			Prot		
Protected Phases		7			8			2		1	6	
Permitted Phases	7			8			2					
Actuated Green, G (s)		5.1		16.2	16.2			43.0		7.7	55.2	
Effective Green, g (s)		5.6		16.7	16.7			43.5		8.2	55.7	
Actuated g/C Ratio		0.06		0.19	0.19			0.48		0.09	0.62	
Clearance Time (s)		4.5		4.5	4.5			4.5		4.5	4.5	
Vehicle Extension (s)		2.0		2.0	2.0			2.0		2.0	2.0	
Lane Grp Cap (vph)		53		242	296			1545		161	2023	
v/s Ratio Prot										0.06	c0.51	
v/s Ratio Perm		c0.03		c0.14	0.14			c0.46				
v/c Ratio		0.43		0.76	0.73			0.95		0.65	0.82	
Uniform Delay, d1		40.7		34.7	34.5			22.2		39.5	13.2	
Progression Factor		1.00		1.00	1.00			1.00		1.00	1.00	
Incremental Delay, d2		2.0		11.3	7.8			6.0		7.0	3.8	
Delay (s)		42.7		46.0	42.3			28.2		46.5	17.0	
Level of Service		D		D	D			C		D	B	
Approach Delay (s)		42.7			43.8			28.2			18.7	
Approach LOS		D			D			C			B	

Intersection Summary			
HCM Average Control Delay	25.8	HCM Level of Service	C
HCM Volume to Capacity ratio	0.87		
Actuated Cycle Length (s)	90.0	Sum of lost time (s)	16.0
Intersection Capacity Utilization	107.6%	ICU Level of Service	G
Analysis Period (min)	15		

c Critical Lane Group

Movement	EBL	EBT	EBR	WBL	WBT	WBR	NBL	NBT	NBR	SBL	SBT	SBR
Lane Configurations												
Ideal Flow (vphpl)	1900	1900	1900	1900	1900	1900	1900	1900	1900	1900	1900	1900
Total Lost time (s)	4.0	4.0		4.0	4.0		4.0	4.0		4.0	4.0	
Lane Util. Factor	0.97	0.95		1.00	0.95		1.00	0.95		1.00	0.95	
Frpb, ped/bikes	1.00	0.99		1.00	0.99		1.00	0.99		1.00	0.98	
Flpb, ped/bikes	1.00	1.00		1.00	1.00		1.00	1.00		1.00	1.00	
Frt	1.00	0.98		1.00	0.95		1.00	0.98		1.00	0.97	
Flt Protected	0.95	1.00		0.95	1.00		0.95	1.00		0.95	1.00	
Satd. Flow (prot)	3433	3437		1770	3356		1770	3418		1770	3395	
Flt Permitted	0.95	1.00		0.95	1.00		0.95	1.00		0.95	1.00	
Satd. Flow (perm)	3433	3437		1770	3356		1770	3418		1770	3395	
Volume (vph)	460	590	91	120	700	310	110	668	120	280	884	180
Peak-hour factor, PHF	0.96	0.96	0.96	0.96	0.96	0.96	0.96	0.96	0.96	0.96	0.96	0.96
Adj. Flow (vph)	479	615	95	125	729	323	115	696	125	292	921	188
RTOR Reduction (vph)	0	13	0	0	56	0	0	16	0	0	18	0
Lane Group Flow (vph)	479	697	0	125	996	0	115	805	0	292	1091	0
Confl. Peds. (#/hr)	6		24	24		6	36		28	28		36
Turn Type	Prot			Prot			Prot			Prot		
Protected Phases	7	4		3	8		5	2		1	6	
Permitted Phases												
Actuated Green, G (s)	13.0	28.9		9.6	25.5		8.1	23.5		11.0	26.4	
Effective Green, g (s)	12.5	29.9		9.1	26.5		7.6	24.5		10.5	27.4	
Actuated g/C Ratio	0.14	0.33		0.10	0.29		0.08	0.27		0.12	0.30	
Clearance Time (s)	3.5	5.0		3.5	5.0		3.5	5.0		3.5	5.0	
Vehicle Extension (s)	2.0	2.0		2.0	2.0		2.0	2.0		2.0	2.0	
Lane Grp Cap (vph)	477	1142		179	988		149	930		207	1034	
v/s Ratio Prot	c0.14	c0.20		0.07	c0.30		0.06	0.24		c0.17	c0.32	
v/s Ratio Perm												
v/c Ratio	1.00	0.61		0.70	1.01		0.77	0.87		1.41	1.06	
Uniform Delay, d1	38.8	25.2		39.1	31.8		40.4	31.2		39.8	31.3	
Progression Factor	1.00	1.00		1.00	1.00		1.00	1.00		1.14	0.88	
Incremental Delay, d2	42.2	0.7		9.2	30.7		19.9	10.6		201.0	37.7	
Delay (s)	81.0	25.8		48.3	62.4		60.2	41.8		246.5	65.3	
Level of Service	F	C		D	E		E	D		F	E	
Approach Delay (s)		48.1			60.9			44.0			103.0	
Approach LOS		D			E			D			F	

Intersection Summary			
HCM Average Control Delay	66.9	HCM Level of Service	E
HCM Volume to Capacity ratio	1.14		
Actuated Cycle Length (s)	90.0	Sum of lost time (s)	20.0
Intersection Capacity Utilization	94.1%	ICU Level of Service	F
Analysis Period (min)	15		

c Critical Lane Group

Movement	EBL	EBT	EBR	WBL	WBT	WBR	NBL	NBT	NBR	SBL	SBT	SBR
Lane Configurations												
Ideal Flow (vphpl)	1900	1900	1900	1900	1900	1900	1900	1900	1900	1900	1900	1900
Total Lost time (s)		4.0						4.0		4.0	4.0	
Lane Util. Factor		1.00						0.95		0.97	0.95	
Frt		0.86						0.93		1.00	0.98	
Flt Protected		1.00						1.00		0.95	1.00	
Satd. Flow (prot)		1611						3282		3433	3475	
Flt Permitted		1.00						0.94		0.95	1.00	
Satd. Flow (perm)		1611						3092		3433	3475	
Volume (vph)	0	0	10	0	0	0	10	347	330	1600	434	60
Peak-hour factor, PHF	0.95	0.95	0.95	0.95	0.95	0.95	0.95	0.95	0.95	0.95	0.95	0.95
Adj. Flow (vph)	0	0	11	0	0	0	11	365	347	1684	457	63
RTOR Reduction (vph)	0	11	0	0	0	0	0	26	0	0	0	0
Lane Group Flow (vph)	0	0	0	0	0	0	0	697	0	1684	520	0
Turn Type										Prot		
Protected Phases								2		1	6	
Permitted Phases												
Actuated Green, G (s)		0.0						8.0		29.0	45.0	
Effective Green, g (s)		0.0						8.0		29.0	45.0	
Actuated g/C Ratio		0.00						0.18		0.64	1.00	
Clearance Time (s)								4.0		4.0	2.0	
Lane Grp Cap (vph)		0						550		2212	3475	
v/s Ratio Prot										c0.49	0.15	
v/s Ratio Perm								c0.23				
v/c Ratio		0.00						10.84dr		0.76	0.15	
Uniform Delay, d1		22.5						18.5		5.6	0.0	
Progression Factor		1.00						0.76		1.00	1.00	
Incremental Delay, d2		0.0						133.1		2.5	0.1	
Delay (s)		22.5						147.1		8.1	0.1	
Level of Service		C						F		A	A	
Approach Delay (s)		22.5			0.0			147.1			6.2	
Approach LOS		C			A			F			A	

Intersection Summary			
HCM Average Control Delay	41.0	HCM Level of Service	D
HCM Volume to Capacity ratio	0.87		
Actuated Cycle Length (s)	45.0	Sum of lost time (s)	8.0
Intersection Capacity Utilization	79.5%	ICU Level of Service	D
Analysis Period (min)	15		

dr Defacto Right Lane. Recode with 1 though lane as a right lane.

c Critical Lane Group

Movement	EBL	EBT	EBR	WBL	WBT	WBR	NBL	NBT	NBR	SBL	SBT	SBR
Lane Configurations												
Ideal Flow (vphpl)	1900	1900	1900	1900	1900	1900	1900	1900	1900	1900	1900	1900
Total Lost time (s)		4.0			4.0			4.0			4.0	
Lane Util. Factor		1.00			1.00			0.95			0.95	
Frpb, ped/bikes		0.97			0.96			0.98			0.99	
Flpb, ped/bikes		0.98			0.97			1.00			1.00	
Frt		0.98			0.94			0.98			0.99	
Flt Protected		0.98			0.99			1.00			1.00	
Satd. Flow (prot)		1691			1605			3402			3472	
Flt Permitted		0.83			0.87			0.91			0.88	
Satd. Flow (perm)		1437			1418			3091			3058	
Volume (vph)	70	80	32	60	60	90	31	507	80	50	584	30
Peak-hour factor, PHF	0.95	0.95	0.95	0.95	0.95	0.95	0.95	0.95	0.95	0.95	0.95	0.95
Adj. Flow (vph)	74	84	34	63	63	95	33	534	84	53	615	32
RTOR Reduction (vph)	0	17	0	0	60	0	0	26	0	0	8	0
Lane Group Flow (vph)	0	175	0	0	161	0	0	625	0	0	692	0
Confl. Peds. (#/hr)	100		100	100		100	100		100	100		100
Turn Type	Perm			Perm			Perm			Perm		
Protected Phases		4			8			2			6	
Permitted Phases	4			8			2			6		
Actuated Green, G (s)		15.0			15.0			22.0			22.0	
Effective Green, g (s)		15.0			15.0			22.0			22.0	
Actuated g/C Ratio		0.33			0.33			0.49			0.49	
Clearance Time (s)		4.0			4.0			4.0			4.0	
Lane Grp Cap (vph)		479			473			1511			1495	
v/s Ratio Prot												
v/s Ratio Perm		c0.12			0.11			0.20			c0.23	
v/c Ratio		0.36			0.34			0.41			0.46	
Uniform Delay, d1		11.4			11.3			7.4			7.6	
Progression Factor		1.00			1.00			1.00			1.00	
Incremental Delay, d2		2.1			2.0			0.8			1.0	
Delay (s)		13.5			13.2			8.2			8.6	
Level of Service		B			B			A			A	
Approach Delay (s)		13.5			13.2			8.2			8.6	
Approach LOS		B			B			A			A	

Intersection Summary			
HCM Average Control Delay	9.6	HCM Level of Service	A
HCM Volume to Capacity ratio	0.42		
Actuated Cycle Length (s)	45.0	Sum of lost time (s)	8.0
Intersection Capacity Utilization	63.9%	ICU Level of Service	B
Analysis Period (min)	15		
c Critical Lane Group			

Movement	EBL	EBT	EBR	WBL	WBT	WBR	NBL	NBT	NBR	SBL	SBT	SBR
Lane Configurations												
Ideal Flow (vphpl)	1900	1900	1900	1900	1900	1900	1900	1900	1900	1900	1900	1900
Total Lost time (s)		4.0			4.0			4.0			4.0	
Lane Util. Factor		1.00			1.00			0.95			0.91	
Frpb, ped/bikes		0.95			0.96			0.98			0.98	
Flpb, ped/bikes		0.97			0.98			1.00			1.00	
Frt		0.96			0.96			0.99			0.99	
Flt Protected		0.98			0.99			1.00			1.00	
Satd. Flow (prot)		1626			1650			3443			4931	
Flt Permitted		0.79			0.82			0.84			0.82	
Satd. Flow (perm)		1302			1369			2895			4039	
Volume (vph)	70	80	70	43	70	50	30	1039	62	70	1556	100
Peak-hour factor, PHF	0.95	0.95	0.95	0.95	0.95	0.95	0.95	0.95	0.95	0.95	0.95	0.95
Adj. Flow (vph)	74	84	74	45	74	53	32	1094	65	74	1638	105
RTOR Reduction (vph)	0	6	0	0	25	0	0	3	0	0	5	0
Lane Group Flow (vph)	0	226	0	0	147	0	0	1188	0	0	1812	0
Confl. Peds. (#/hr)	100		100	100		100	100		100	100		100
Turn Type	Perm			Perm			Perm			Perm		
Protected Phases		4			4			2			6	
Permitted Phases	4			4			2			6		
Actuated Green, G (s)		16.7			16.7			59.3			59.3	
Effective Green, g (s)		17.2			17.2			59.8			59.8	
Actuated g/C Ratio		0.20			0.20			0.70			0.70	
Clearance Time (s)		4.5			4.5			4.5			4.5	
Vehicle Extension (s)		2.0			2.0			2.0			2.0	
Lane Grp Cap (vph)		263			277			2037			2842	
v/s Ratio Prot												
v/s Ratio Perm		c0.17			0.11			0.41			c0.45	
v/c Ratio		0.86			0.53			0.58			0.64	
Uniform Delay, d1		32.7			30.3			6.3			6.8	
Progression Factor		1.00			1.00			0.79			1.00	
Incremental Delay, d2		23.1			1.0			1.0			1.1	
Delay (s)		55.9			31.3			6.1			7.9	
Level of Service		E			C			A			A	
Approach Delay (s)		55.9			31.3			6.1			7.9	
Approach LOS		E			C			A			A	

Intersection Summary			
HCM Average Control Delay	11.7	HCM Level of Service	B
HCM Volume to Capacity ratio	0.69		
Actuated Cycle Length (s)	85.0	Sum of lost time (s)	8.0
Intersection Capacity Utilization	103.6%	ICU Level of Service	G
Analysis Period (min)	15		
c Critical Lane Group			

Movement	EBL	EBT	EBR	WBL	WBT	WBR	NBL	NBT	NBR	SBL	SBT	SBR
Lane Configurations												
Ideal Flow (vphpl)	1900	1900	1900	1900	1900	1900	1900	1900	1900	1900	1900	1900
Total Lost time (s)	4.0	4.0		4.0	4.0		4.0	4.0		4.0	4.0	
Lane Util. Factor	1.00	0.95		1.00	0.95		1.00	1.00		1.00	1.00	
Frpb, ped/bikes	1.00	1.00		1.00	0.99		1.00	0.99		1.00	1.00	
Flpb, ped/bikes	0.99	1.00		0.99	1.00		1.00	1.00		0.98	1.00	
Frt	1.00	0.97		1.00	0.99		1.00	0.98		1.00	0.99	
Flt Protected	0.95	1.00		0.95	1.00		0.95	1.00		0.95	1.00	
Satd. Flow (prot)	1748	3432		1759	3462		1767	1812		1736	1841	
Flt Permitted	0.17	1.00		0.36	1.00		0.44	1.00		0.59	1.00	
Satd. Flow (perm)	320	3432		675	3462		810	1812		1084	1841	
Volume (vph)	30	380	80	74	689	75	90	201	34	83	400	30
Peak-hour factor, PHF	0.95	0.95	0.95	0.95	0.95	0.95	0.95	0.95	0.95	0.95	0.95	0.95
Adj. Flow (vph)	32	400	84	78	725	79	95	212	36	87	421	32
RTOR Reduction (vph)	0	22	0	0	11	0	0	8	0	0	3	0
Lane Group Flow (vph)	32	462	0	78	793	0	95	240	0	87	450	0
Confl. Peds. (#/hr)	30		12	12		30	6		54	54		6
Turn Type	Perm			Perm			Perm			Perm		
Protected Phases		4			8			2			6	
Permitted Phases	4			8			2			6		
Actuated Green, G (s)	24.0	24.0		24.0	24.0		49.5	49.5		49.5	49.5	
Effective Green, g (s)	23.0	23.0		23.0	23.0		49.0	49.0		49.0	49.0	
Actuated g/C Ratio	0.29	0.29		0.29	0.29		0.61	0.61		0.61	0.61	
Clearance Time (s)	3.0	3.0		3.0	3.0		3.5	3.5		3.5	3.5	
Lane Grp Cap (vph)	92	987		194	995		496	1110		664	1128	
v/s Ratio Prot		0.13			c0.23			0.13			c0.24	
v/s Ratio Perm	0.10			0.12			0.12			0.08		
v/c Ratio	0.35	0.47		0.40	0.80		0.19	0.22		0.13	0.40	
Uniform Delay, d1	22.6	23.5		23.0	26.3		6.8	6.9		6.5	7.9	
Progression Factor	1.00	1.00		0.87	0.91		1.00	1.00		1.00	1.00	
Incremental Delay, d2	10.1	1.6		5.6	6.1		0.9	0.4		0.4	1.1	
Delay (s)	32.7	25.1		25.6	30.1		7.7	7.4		6.9	9.0	
Level of Service	C	C		C	C		A	A		A	A	
Approach Delay (s)		25.5			29.7			7.5			8.7	
Approach LOS		C			C			A			A	

Intersection Summary			
HCM Average Control Delay	20.4	HCM Level of Service	C
HCM Volume to Capacity ratio	0.53		
Actuated Cycle Length (s)	80.0	Sum of lost time (s)	8.0
Intersection Capacity Utilization	83.4%	ICU Level of Service	E
Analysis Period (min)	15		
c Critical Lane Group			

Movement	EBL	EBT	EBR	WBL	WBT	WBR	NBL	NBT	NBR	SBL	SBT	SBR
Lane Configurations												
Ideal Flow (vphpl)	1900	1900	1900	1900	1900	1900	1900	1900	1900	1900	1900	1900
Total Lost time (s)	4.0	4.0		4.0	4.0			4.0			4.0	
Lane Util. Factor	1.00	0.95		1.00	0.95			0.95			0.95	
Frpb, ped/bikes	1.00	0.99		1.00	1.00			1.00			1.00	
Flpb, ped/bikes	1.00	1.00		0.98	1.00			1.00			1.00	
Frt	1.00	0.98		1.00	0.99			0.97			0.98	
Flt Protected	0.95	1.00		0.95	1.00			0.99			0.99	
Satd. Flow (prot)	1763	3428		1740	3512			3385			3421	
Flt Permitted	0.27	1.00		0.42	1.00			0.79			0.84	
Satd. Flow (perm)	506	3428		767	3512			2716			2893	
Volume (vph)	30	416	80	66	728	33	70	171	54	64	240	50
Peak-hour factor, PHF	0.95	0.95	0.95	0.95	0.95	0.95	0.95	0.95	0.95	0.95	0.95	0.95
Adj. Flow (vph)	32	438	84	69	766	35	74	180	57	67	253	53
RTOR Reduction (vph)	0	20	0	0	4	0	0	24	0	0	16	0
Lane Group Flow (vph)	32	502	0	69	797	0	0	287	0	0	357	0
Confl. Peds. (#/hr)	18		54	54		18	4		18	18		4
Turn Type	Perm			Perm			Perm			Perm		
Protected Phases		4			8			2			6	
Permitted Phases	4			8			2			6		
Actuated Green, G (s)	38.0	38.0		38.0	38.0			32.0			32.0	
Effective Green, g (s)	39.0	39.0		39.0	39.0			33.0			33.0	
Actuated g/C Ratio	0.49	0.49		0.49	0.49			0.41			0.41	
Clearance Time (s)	5.0	5.0		5.0	5.0			5.0			5.0	
Lane Grp Cap (vph)	247	1671		374	1712			1120			1193	
v/s Ratio Prot		0.15			c0.23							
v/s Ratio Perm	0.06			0.09				0.11			c0.12	
v/c Ratio	0.13	0.30		0.18	0.47			0.26			0.30	
Uniform Delay, d1	11.2	12.3		11.5	13.6			15.4			15.7	
Progression Factor	0.96	1.03		1.38	1.48			0.64			1.00	
Incremental Delay, d2	1.0	0.4		1.0	0.8			0.5			0.6	
Delay (s)	11.7	13.1		16.9	21.0			10.4			16.4	
Level of Service	B	B		B	C			B			B	
Approach Delay (s)		13.1			20.7			10.4			16.4	
Approach LOS		B			C			B			B	

Intersection Summary			
HCM Average Control Delay	16.4	HCM Level of Service	B
HCM Volume to Capacity ratio	0.39		
Actuated Cycle Length (s)	80.0	Sum of lost time (s)	8.0
Intersection Capacity Utilization	73.7%	ICU Level of Service	D
Analysis Period (min)	15		
c Critical Lane Group			

Movement	EBL	EBT	EBR	WBL	WBT	WBR	NBL	NBT	NBR	SBL	SBT	SBR
Lane Configurations												
Ideal Flow (vphpl)	1900	1900	1900	1900	1900	1900	1900	1900	1900	1900	1900	1900
Total Lost time (s)	4.0	4.0		4.0	4.0			4.0			4.0	
Lane Util. Factor	1.00	0.95		1.00	0.95			0.95			0.95	
Frpb, ped/bikes	1.00	0.99		1.00	0.99			0.99			1.00	
Flpb, ped/bikes	1.00	1.00		0.98	1.00			1.00			1.00	
Frt	1.00	0.98		1.00	0.98			0.97			0.99	
Flt Protected	0.95	1.00		0.95	1.00			0.99			0.99	
Satd. Flow (prot)	1764	3452		1735	3436			3381			3451	
Flt Permitted	0.24	1.00		0.42	1.00			0.86			0.76	
Satd. Flow (perm)	443	3452		773	3436			2939			2642	
Volume (vph)	40	443	61	106	728	139	39	238	77	119	346	30
Peak-hour factor, PHF	0.96	0.96	0.96	0.96	0.96	0.96	0.96	0.96	0.96	0.96	0.96	0.96
Adj. Flow (vph)	42	461	64	110	758	145	41	248	80	124	360	31
RTOR Reduction (vph)	0	14	0	0	20	0	0	32	0	0	6	0
Lane Group Flow (vph)	42	511	0	110	883	0	0	337	0	0	509	0
Confl. Peds. (#/hr)	13		71	71		13	22		22	22		22
Turn Type	Perm			Perm			Perm			Perm		
Protected Phases		4			8			2			6	
Permitted Phases	4			8			2			6		
Actuated Green, G (s)	41.5	41.5		41.5	41.5			32.0			32.0	
Effective Green, g (s)	41.0	41.0		41.0	41.0			31.0			31.0	
Actuated g/C Ratio	0.51	0.51		0.51	0.51			0.39			0.39	
Clearance Time (s)	3.5	3.5		3.5	3.5			3.0			3.0	
Lane Grp Cap (vph)	227	1769		396	1761			1139			1024	
v/s Ratio Prot		0.15			c0.26							
v/s Ratio Perm	0.09			0.14				0.11			c0.19	
v/c Ratio	0.19	0.29		0.28	0.50			0.30			0.50	
Uniform Delay, d1	10.5	11.2		11.1	12.8			17.0			18.6	
Progression Factor	1.28	1.31		1.00	1.00			0.65			1.00	
Incremental Delay, d2	1.7	0.4		1.7	1.0			0.6			1.7	
Delay (s)	15.2	15.0		12.8	13.8			11.6			20.3	
Level of Service	B	B		B	B			B			C	
Approach Delay (s)		15.0			13.7			11.6			20.3	
Approach LOS		B			B			B			C	

Intersection Summary			
HCM Average Control Delay	15.1	HCM Level of Service	B
HCM Volume to Capacity ratio	0.50		
Actuated Cycle Length (s)	80.0	Sum of lost time (s)	8.0
Intersection Capacity Utilization	102.5%	ICU Level of Service	G
Analysis Period (min)	15		
c Critical Lane Group			

Movement	EBT	EBR	WBL	WBT	NBL	NBR
Lane Configurations						
Ideal Flow (vphpl)	1900	1900	1900	1900	1900	1900
Total Lost time (s)	4.0		4.0	4.0	4.0	
Lane Util. Factor	0.95		1.00	0.95	1.00	
Frpb, ped/bikes	0.94		1.00	1.00	1.00	
Flpb, ped/bikes	1.00		1.00	1.00	1.00	
Frt	0.98		1.00	1.00	0.97	
Flt Protected	1.00		0.95	1.00	0.96	
Satd. Flow (prot)	3247		1770	3539	1735	
Flt Permitted	1.00		0.95	1.00	0.96	
Satd. Flow (perm)	3247		1770	3539	1735	
Volume (vph)	543	98	72	839	134	44
Peak-hour factor, PHF	0.95	0.95	0.95	0.95	0.95	0.95
Adj. Flow (vph)	572	103	76	883	141	46
RTOR Reduction (vph)	0	0	0	0	0	0
Lane Group Flow (vph)	675	0	76	883	187	0
Confl. Peds. (#/hr)		146	266			
Turn Type			Prot			
Protected Phases	4		3	8	2	
Permitted Phases						
Actuated Green, G (s)	52.0		7.8	63.8	13.2	
Effective Green, g (s)	52.0		7.8	63.8	13.2	
Actuated g/C Ratio	0.61		0.09	0.75	0.16	
Clearance Time (s)	4.0		4.0	4.0	4.0	
Vehicle Extension (s)	3.0		3.0	3.0	3.0	
Lane Grp Cap (vph)	1986		162	2656	269	
v/s Ratio Prot	0.21		c0.04	c0.25	c0.11	
v/s Ratio Perm						
v/c Ratio	0.34		0.47	0.33	0.70	
Uniform Delay, d1	8.1		36.6	3.5	34.0	
Progression Factor	1.00		1.03	0.72	0.72	
Incremental Delay, d2	0.5		1.6	0.2	7.5	
Delay (s)	8.6		39.3	2.8	32.0	
Level of Service	A		D	A	C	
Approach Delay (s)	8.6			5.7	32.0	
Approach LOS	A			A	C	

Intersection Summary			
HCM Average Control Delay	9.4	HCM Level of Service	A
HCM Volume to Capacity ratio	0.40		
Actuated Cycle Length (s)	85.0	Sum of lost time (s)	8.0
Intersection Capacity Utilization	43.3%	ICU Level of Service	A
Analysis Period (min)	15		
c Critical Lane Group			

Movement	EBL	EBT	EBR	WBL	WBT	WBR	NBL	NBT	NBR	SBL	SBT	SBR
Lane Configurations												
Ideal Flow (vphpl)	1900	1900	1900	1900	1900	1900	1900	1900	1900	1900	1900	1900
Total Lost time (s)	4.0	4.0		4.0	4.0			4.0		4.0	4.0	
Lane Util. Factor	1.00	0.95		1.00	0.95			0.95		1.00	0.95	
Frpb, ped/bikes	1.00	0.96		1.00	0.98			0.99		1.00	0.97	
Flpb, ped/bikes	0.95	1.00		0.92	1.00			1.00		1.00	1.00	
Frt	1.00	0.97		1.00	0.98			0.99		1.00	0.97	
Flt Protected	0.95	1.00		0.95	1.00			0.99		0.95	1.00	
Satd. Flow (prot)	1683	3270		1636	3407			3436		1770	3339	
Flt Permitted	0.26	1.00		0.36	1.00			0.59		0.95	1.00	
Satd. Flow (perm)	453	3270		622	3407			2037		1770	3339	
Volume (vph)	126	354	107	90	526	70	125	505	49	140	949	260
Peak-hour factor, PHF	0.95	0.95	0.95	0.95	0.95	0.95	0.95	0.95	0.95	0.95	0.95	0.95
Adj. Flow (vph)	133	373	113	95	554	74	132	532	52	147	999	274
RTOR Reduction (vph)	0	34	0	0	13	0	0	8	0	0	18	0
Lane Group Flow (vph)	133	452	0	95	615	0	0	708	0	147	1255	0
Confl. Peds. (#/hr)	72		137	137		72			58	58		92
Turn Type	Perm			Perm			Prot			Prot		
Protected Phases		4			8		5	2		1	6	
Permitted Phases	4			8								
Actuated Green, G (s)	24.4	24.4		24.4	24.4			36.6		10.5	51.6	
Effective Green, g (s)	24.9	24.9		24.9	24.9			37.1		11.0	52.1	
Actuated g/C Ratio	0.29	0.29		0.29	0.29			0.44		0.13	0.61	
Clearance Time (s)	4.5	4.5		4.5	4.5			4.5		4.5	4.5	
Vehicle Extension (s)	2.0	2.0		2.0	2.0			2.0		2.0	2.0	
Lane Grp Cap (vph)	133	958		182	998			889		229	2047	
v/s Ratio Prot		0.14			0.18					0.08	c0.38	
v/s Ratio Perm	c0.29			0.15				c0.35				
v/c Ratio	1.00	0.47		0.52	0.62			8.80dl		0.64	0.61	
Uniform Delay, d1	30.1	24.7		25.1	25.9			20.7		35.1	10.2	
Progression Factor	0.73	0.67		1.00	1.00			1.38		1.28	0.53	
Incremental Delay, d2	76.0	0.1		1.2	0.8			4.5		3.3	1.0	
Delay (s)	98.1	16.7		26.3	26.7			33.2		48.4	6.4	
Level of Service	F	B		C	C			C		D	A	
Approach Delay (s)		34.2			26.7			33.2			10.8	
Approach LOS		C			C			C			B	

Intersection Summary			
HCM Average Control Delay	22.8	HCM Level of Service	C
HCM Volume to Capacity ratio	0.85		
Actuated Cycle Length (s)	85.0	Sum of lost time (s)	12.0
Intersection Capacity Utilization	92.9%	ICU Level of Service	F
Analysis Period (min)	15		

dl Defacto Left Lane. Recode with 1 though lane as a left lane.
dr Defacto Right Lane. Recode with 1 though lane as a right lane.
c Critical Lane Group

Movement	WBL	WBR	NBT	NBR	SBL	SBT
Lane Configurations						
Sign Control	Stop		Free			Free
Grade	0%		0%			0%
Volume (veh/h)	10	31	663	10	20	1160
Peak Hour Factor	0.95	0.95	0.95	0.95	0.95	0.95
Hourly flow rate (vph)	11	33	698	11	21	1221
Pedestrians	34		33			34
Lane Width (ft)	12.0		12.0			12.0
Walking Speed (ft/s)	4.0		4.0			4.0
Percent Blockage	3		3			3
Right turn flare (veh)						
Median type	None					
Median storage veh)						
Upstream signal (ft)			230			471
pX, platoon unblocked	0.80	0.95			0.95	
vC, conflicting volume	1423	422			742	
vC1, stage 1 conf vol						
vC2, stage 2 conf vol						
vCu, unblocked vol	1097	342			678	
tC, single (s)	6.8	6.9			4.1	
tC, 2 stage (s)						
tF (s)	3.5	3.3			2.2	
p0 queue free %	93	94			97	
cM capacity (veh/h)	153	588			841	

Direction, Lane #	WB 1	NB 1	NB 2	SB 1	SB 2	SB 3
Volume Total	43	465	243	21	611	611
Volume Left	11	0	0	21	0	0
Volume Right	33	0	11	0	0	0
cSH	347	1700	1700	841	1700	1700
Volume to Capacity	0.12	0.27	0.14	0.03	0.36	0.36
Queue Length 95th (ft)	11	0	0	2	0	0
Control Delay (s)	16.8	0.0	0.0	9.4	0.0	0.0
Lane LOS	C			A		
Approach Delay (s)	16.8	0.0		0.2		
Approach LOS	C					

Intersection Summary			
Average Delay	0.5		
Intersection Capacity Utilization	49.3%	ICU Level of Service	A
Analysis Period (min)	15		

Movement	EBL	EBT	EBR	WBL	WBT	WBR	NBL	NBT	NBR	SBL	SBT	SBR
Lane Configurations												
Ideal Flow (vphpl)	1900	1900	1900	1900	1900	1900	1900	1900	1900	1900	1900	1900
Total Lost time (s)		4.0		4.0	4.0			4.0		4.0	4.0	
Lane Util. Factor		0.91		1.00	0.95			1.00		1.00	1.00	
Frpb, ped/bikes		1.00		1.00	1.00			0.99		1.00	0.99	
Flpb, ped/bikes		1.00		0.99	1.00			1.00		0.98	1.00	
Frt		0.99		1.00	0.98			0.98		1.00	0.98	
Flt Protected		1.00		0.95	1.00			0.99		0.95	1.00	
Satd. Flow (prot)		4994		1758	3469			1775		1729	1815	
Flt Permitted		0.83		0.41	1.00			0.54		0.40	1.00	
Satd. Flow (perm)		4174		767	3469			969		730	1815	
Volume (vph)	50	470	40	62	627	81	70	204	60	200	314	50
Peak-hour factor, PHF	0.95	0.95	0.95	0.95	0.95	0.95	0.95	0.95	0.95	0.95	0.95	0.95
Adj. Flow (vph)	53	495	42	65	660	85	74	215	63	211	331	53
RTOR Reduction (vph)	0	10	0	0	12	0	0	9	0	0	7	0
Lane Group Flow (vph)	0	580	0	65	733	0	0	343	0	211	377	0
Confl. Peds. (#/hr)	24		18	18		24	24		48	48		24
Turn Type	Perm			Perm			Perm			Perm		
Protected Phases		4			8			2			6	
Permitted Phases	4			8			2			6		
Actuated Green, G (s)		51.0		51.0	51.0			24.0		24.0	24.0	
Effective Green, g (s)		52.0		52.0	52.0			25.0		25.0	25.0	
Actuated g/C Ratio		0.61		0.61	0.61			0.29		0.29	0.29	
Clearance Time (s)		5.0		5.0	5.0			5.0		5.0	5.0	
Lane Grp Cap (vph)		2554		469	2122			285		215	534	
v/s Ratio Prot					c0.21						0.21	
v/s Ratio Perm		0.14		0.08				c0.35		0.29		
v/c Ratio		0.23		0.14	0.35			1.20		0.98	0.71	
Uniform Delay, d1		7.4		7.0	8.1			30.0		29.8	26.7	
Progression Factor		1.00		1.00	1.00			1.00		1.00	1.00	
Incremental Delay, d2		0.2		0.6	0.4			119.8		56.8	7.6	
Delay (s)		7.6		7.6	8.6			149.8		86.5	34.4	
Level of Service		A		A	A			F		F	C	
Approach Delay (s)		7.6			8.5			149.8			52.9	
Approach LOS		A			A			F			D	

Intersection Summary			
HCM Average Control Delay	40.7	HCM Level of Service	D
HCM Volume to Capacity ratio	0.62		
Actuated Cycle Length (s)	85.0	Sum of lost time (s)	8.0
Intersection Capacity Utilization	101.5%	ICU Level of Service	G
Analysis Period (min)	15		
c Critical Lane Group			

Movement	EBL	EBT	EBR	WBL	WBT	WBR	NBL	NBT	NBR	SBL	SBT	SBR
Lane Configurations												
Ideal Flow (vphpl)	1900	1900	1900	1900	1900	1900	1900	1900	1900	1900	1900	1900
Total Lost time (s)		4.0			4.0		4.0	4.0		4.0	4.0	
Lane Util. Factor		0.91			0.91		1.00	1.00		1.00	1.00	
Frpb, ped/bikes		1.00			1.00		1.00	0.99		1.00	1.00	
Flpb, ped/bikes		1.00			1.00		0.99	1.00		0.99	1.00	
Frt		1.00			0.98		1.00	0.96		1.00	0.99	
Flt Protected		1.00			1.00		0.95	1.00		0.95	1.00	
Satd. Flow (prot)		5046			4979		1757	1770		1749	1830	
Flt Permitted		0.88			0.85		0.32	1.00		0.39	1.00	
Satd. Flow (perm)		4463			4224		586	1770		711	1830	
Volume (vph)	30	700	20	51	669	91	50	194	73	90	276	30
Peak-hour factor, PHF	0.95	0.95	0.95	0.95	0.95	0.95	0.95	0.95	0.95	0.95	0.95	0.95
Adj. Flow (vph)	32	737	21	54	704	96	53	204	77	95	291	32
RTOR Reduction (vph)	0	4	0	0	20	0	0	17	0	0	5	0
Lane Group Flow (vph)	0	786	0	0	834	0	53	264	0	95	318	0
Confl. Peds. (#/hr)			18	18			12		18	18		12
Turn Type	Perm			Perm			Perm			Perm		
Protected Phases		4			8			2			6	
Permitted Phases	4			8			2			6		
Actuated Green, G (s)		50.0			50.0		19.0	19.0		19.0	19.0	
Effective Green, g (s)		51.5			51.5		20.5	20.5		20.5	20.5	
Actuated g/C Ratio		0.64			0.64		0.26	0.26		0.26	0.26	
Clearance Time (s)		5.5			5.5		5.5	5.5		5.5	5.5	
Lane Grp Cap (vph)		2873			2719		150	454		182	469	
v/s Ratio Prot								0.15			c0.17	
v/s Ratio Perm		0.18			c0.20		0.09			0.13		
v/c Ratio		0.27			0.31		0.35	0.58		0.52	0.68	
Uniform Delay, d1		6.2			6.3		24.3	26.0		25.5	26.8	
Progression Factor		1.00			0.67		1.00	1.00		1.19	1.20	
Incremental Delay, d2		0.2			0.3		6.4	5.4		10.1	7.5	
Delay (s)		6.4			4.5		30.7	31.4		40.4	39.7	
Level of Service		A			A		C	C		D	D	
Approach Delay (s)		6.4			4.5			31.3			39.9	
Approach LOS		A			A			C			D	

Intersection Summary			
HCM Average Control Delay	15.0	HCM Level of Service	B
HCM Volume to Capacity ratio	0.41		
Actuated Cycle Length (s)	80.0	Sum of lost time (s)	8.0
Intersection Capacity Utilization	64.1%	ICU Level of Service	C
Analysis Period (min)	15		
c Critical Lane Group			

Movement	EBL	EBT	EBR	WBL	WBT	WBR	NBL	NBT	NBR	SBL	SBT	SBR
Lane Configurations												
Ideal Flow (vphpl)	1900	1900	1900	1900	1900	1900	1900	1900	1900	1900	1900	1900
Total Lost time (s)		4.0			4.0			4.0			4.0	
Lane Util. Factor		0.91			0.91			0.95			0.95	
Frpb, ped/bikes		1.00			1.00			0.99			1.00	
Flpb, ped/bikes		1.00			1.00			1.00			1.00	
Frt		0.99			0.98			0.97			0.99	
Flt Protected		1.00			1.00			0.99			0.99	
Satd. Flow (prot)		5026			4944			3399			3426	
Flt Permitted		0.82			0.83			0.83			0.78	
Satd. Flow (perm)		4150			4102			2855			2692	
Volume (vph)	54	779	40	58	747	136	30	164	44	127	312	44
Peak-hour factor, PHF	0.95	0.95	0.95	0.95	0.95	0.95	0.95	0.95	0.95	0.95	0.95	0.95
Adj. Flow (vph)	57	820	42	61	786	143	32	173	46	134	328	46
RTOR Reduction (vph)	0	6	0	0	29	0	0	24	0	0	10	0
Lane Group Flow (vph)	0	913	0	0	961	0	0	227	0	0	498	0
Confl. Peds. (#/hr)	17		19	19		17	12		16	16		12
Turn Type	Perm			Perm			Perm			Perm		
Protected Phases		4			8			2			6	
Permitted Phases	4			8			2			6		
Actuated Green, G (s)		50.0			50.0			19.0			19.0	
Effective Green, g (s)		51.5			51.5			20.5			20.5	
Actuated g/C Ratio		0.64			0.64			0.26			0.26	
Clearance Time (s)		5.5			5.5			5.5			5.5	
Lane Grp Cap (vph)		2672			2641			732			690	
v/s Ratio Prot												
v/s Ratio Perm		0.22			c0.23			0.08			c0.19	
v/c Ratio		0.34			0.36			0.31			0.72	
Uniform Delay, d1		6.5			6.6			24.0			27.2	
Progression Factor		0.75			1.00			1.00			0.49	
Incremental Delay, d2		0.3			0.4			1.1			6.2	
Delay (s)		5.2			7.0			25.1			19.5	
Level of Service		A			A			C			B	
Approach Delay (s)		5.2			7.0			25.1			19.5	
Approach LOS		A			A			C			B	

Intersection Summary			
HCM Average Control Delay	10.5	HCM Level of Service	B
HCM Volume to Capacity ratio	0.47		
Actuated Cycle Length (s)	80.0	Sum of lost time (s)	8.0
Intersection Capacity Utilization	100.4%	ICU Level of Service	G
Analysis Period (min)	15		
c Critical Lane Group			

Movement	EBL	EBT	EBR	WBL	WBT	WBR	NBL	NBT	NBR	SBL	SBT	SBR
Lane Configurations												
Ideal Flow (vphpl)	1900	1900	1900	1900	1900	1900	1900	1900	1900	1900	1900	1900
Total Lost time (s)		4.0			4.0			4.0			4.0	
Lane Util. Factor		0.91			0.91			1.00			1.00	
Frpb, ped/bikes		1.00			0.97			1.00			0.94	
Flpb, ped/bikes		1.00			1.00			1.00			1.00	
Frt		1.00			0.98			0.93			0.92	
Flt Protected		1.00			1.00			0.98			0.98	
Satd. Flow (prot)		5069			4868			1695			1589	
Flt Permitted		0.88			0.93			0.88			0.87	
Satd. Flow (perm)		4469			4518			1523			1411	
Volume (vph)	31	929	10	10	868	98	10	0	10	54	0	73
Peak-hour factor, PHF	0.95	0.95	0.95	0.95	0.95	0.95	0.95	0.95	0.95	0.95	0.95	0.95
Adj. Flow (vph)	33	978	11	11	914	103	11	0	11	57	0	77
RTOR Reduction (vph)	0	1	0	0	0	0	0	9	0	0	0	0
Lane Group Flow (vph)	0	1021	0	0	1028	0	0	13	0	0	134	0
Confl. Peds. (#/hr)						98						98
Turn Type	Perm			Perm			Perm			Perm		
Protected Phases		4			8			2			6	
Permitted Phases	4			8			2			6		
Actuated Green, G (s)		60.1			60.1			16.9			16.9	
Effective Green, g (s)		60.1			60.1			16.9			16.9	
Actuated g/C Ratio		0.71			0.71			0.20			0.20	
Clearance Time (s)		4.0			4.0			4.0			4.0	
Vehicle Extension (s)		3.0			3.0			3.0			3.0	
Lane Grp Cap (vph)		3160			3194			303			281	
v/s Ratio Prot												
v/s Ratio Perm		c0.23			0.23			0.01			c0.09	
v/c Ratio		0.32			0.32			0.04			0.48	
Uniform Delay, d1		4.7			4.7			27.5			30.1	
Progression Factor		1.00			1.59			1.00			0.99	
Incremental Delay, d2		0.3			0.2			0.1			1.2	
Delay (s)		5.0			7.7			27.6			31.0	
Level of Service		A			A			C			C	
Approach Delay (s)		5.0			7.7			27.6			31.0	
Approach LOS		A			A			C			C	

Intersection Summary			
HCM Average Control Delay	8.1	HCM Level of Service	A
HCM Volume to Capacity ratio	0.36		
Actuated Cycle Length (s)	85.0	Sum of lost time (s)	8.0
Intersection Capacity Utilization	71.2%	ICU Level of Service	C
Analysis Period (min)	15		
c Critical Lane Group			

Movement	EBL	EBT	EBR	WBL	WBT	WBR	NBL	NBT	NBR	SBL	SBT	SBR
Lane Configurations												
Ideal Flow (vphpl)	1900	1900	1900	1900	1900	1900	1900	1900	1900	1900	1900	1900
Total Lost time (s)		4.0			4.0		4.0	4.0		4.0	4.0	
Lane Util. Factor		0.91			0.91		1.00	0.95		1.00	0.95	
Frpb, ped/bikes		1.00			0.99		1.00	0.99		1.00	0.99	
Flpb, ped/bikes		1.00			1.00		0.99	1.00		0.98	1.00	
Frt		0.98			0.97		1.00	0.97		1.00	0.97	
Flt Protected		0.99			0.99		0.95	1.00		0.95	1.00	
Satd. Flow (prot)		4954			4865		1760	3415		1741	3408	
Flt Permitted		0.66			0.68		0.23	1.00		0.46	1.00	
Satd. Flow (perm)		3267			3322		425	3415		851	3408	
Volume (vph)	128	758	107	110	717	190	70	356	80	285	714	179
Peak-hour factor, PHF	0.95	0.95	0.95	0.95	0.95	0.95	0.95	0.95	0.95	0.95	0.95	0.95
Adj. Flow (vph)	135	798	113	116	755	200	74	375	84	300	752	188
RTOR Reduction (vph)	0	21	0	0	68	0	0	15	0	0	18	0
Lane Group Flow (vph)	0	1025	0	0	1003	0	74	444	0	300	922	0
Confl. Peds. (#/hr)	40		9			40	25		31	31		25
Turn Type	Perm			pm+pt			Perm			Perm		
Protected Phases		4		3	8			2			6	
Permitted Phases	4			8			2			6		
Actuated Green, G (s)		30.4			30.4		44.1	44.1		44.1	44.1	
Effective Green, g (s)		31.9			31.9		45.1	45.1		45.1	45.1	
Actuated g/C Ratio		0.38			0.38		0.53	0.53		0.53	0.53	
Clearance Time (s)		5.5			5.5		5.0	5.0		5.0	5.0	
Vehicle Extension (s)		2.0			2.0		2.0	2.0		2.0	2.0	
Lane Grp Cap (vph)		1226			1247		226	1812		452	1808	
v/s Ratio Prot								0.13			0.27	
v/s Ratio Perm		c0.31			0.30		0.17			c0.35		
v/c Ratio		0.84			0.80		0.33	0.24		0.66	0.51	
Uniform Delay, d1		24.2			23.8		11.3	10.8		14.5	12.8	
Progression Factor		1.49			1.00		1.41	1.38		1.13	1.24	
Incremental Delay, d2		4.7			3.6		3.7	0.3		6.1	0.8	
Delay (s)		40.8			27.4		19.7	15.2		22.5	16.8	
Level of Service		D			C		B	B		C	B	
Approach Delay (s)		40.8			27.4			15.8			18.2	
Approach LOS		D			C			B			B	

Intersection Summary			
HCM Average Control Delay	26.5	HCM Level of Service	C
HCM Volume to Capacity ratio	0.74		
Actuated Cycle Length (s)	85.0	Sum of lost time (s)	8.0
Intersection Capacity Utilization	90.6%	ICU Level of Service	E
Analysis Period (min)	15		

c Critical Lane Group

Movement	EBL	EBT	EBR	WBL	WBT	WBR	NBL	NBT	NBR	SBL	SBT	SBR
Lane Configurations												
Ideal Flow (vphpl)	1900	1900	1900	1900	1900	1900	1900	1900	1900	1900	1900	1900
Total Lost time (s)		4.0			4.0			4.0	4.0		4.0	
Lane Util. Factor		0.91			0.91			1.00	1.00		1.00	
Frpb, ped/bikes		1.00			0.99			1.00	0.88		0.97	
Flpb, ped/bikes		1.00			1.00			0.97	1.00		0.95	
Frt		1.00			0.99			1.00	0.85		0.96	
Flt Protected		1.00			1.00			0.98	1.00		0.97	
Satd. Flow (prot)		5040			4983			1770	1395		1606	
Flt Permitted		0.88			0.88			0.88	1.00		0.82	
Satd. Flow (perm)		4451			4372			1585	1395		1357	
Volume (vph)	30	1090	33	30	984	80	22	33	20	80	30	40
Peak-hour factor, PHF	0.95	0.95	0.95	0.95	0.95	0.95	0.95	0.95	0.95	0.95	0.95	0.95
Adj. Flow (vph)	32	1147	35	32	1036	84	23	35	21	84	32	42
RTOR Reduction (vph)	0	4	0	0	11	0	0	0	15	0	16	0
Lane Group Flow (vph)	0	1210	0	0	1141	0	0	58	6	0	142	0
Confl. Peds. (#/hr)	100		100	100		100	100		100	100		100
Turn Type	Perm			Perm			Perm		Perm	Perm		
Protected Phases		4			8			2			6	
Permitted Phases	4			8			2		2	6		
Actuated Green, G (s)		48.0			48.0			23.0	23.0		23.0	
Effective Green, g (s)		48.5			48.5			23.5	23.5		23.5	
Actuated g/C Ratio		0.61			0.61			0.29	0.29		0.29	
Clearance Time (s)		4.5			4.5			4.5	4.5		4.5	
Lane Grp Cap (vph)		2698			2651			466	410		399	
v/s Ratio Prot												
v/s Ratio Perm		c0.27			0.26			0.04	0.00		c0.10	
v/c Ratio		0.45			0.43			0.12	0.02		0.36	
Uniform Delay, d1		8.5			8.4			20.7	20.0		22.3	
Progression Factor		1.00			1.00			1.00	1.00		1.00	
Incremental Delay, d2		0.5			0.5			0.5	0.1		2.5	
Delay (s)		9.1			8.9			21.3	20.1		24.7	
Level of Service		A			A			C	C		C	
Approach Delay (s)		9.1			8.9			21.0			24.7	
Approach LOS		A			A			C			C	

Intersection Summary			
HCM Average Control Delay	10.3	HCM Level of Service	B
HCM Volume to Capacity ratio	0.42		
Actuated Cycle Length (s)	80.0	Sum of lost time (s)	8.0
Intersection Capacity Utilization	81.7%	ICU Level of Service	D
Analysis Period (min)	15		

c Critical Lane Group

Movement	EBL	EBT	EBR	WBL	WBT	WBR	NBL	NBT	NBR	SBL	SBT	SBR
Lane Configurations												
Ideal Flow (vphpl)	1900	1900	1900	1900	1900	1900	1900	1900	1900	1900	1900	1900
Total Lost time (s)	4.0	4.0		4.0	4.0		4.0	4.0	4.0	4.0	4.0	4.0
Lane Util. Factor	1.00	0.91		1.00	0.91		1.00	0.95	1.00	1.00	0.95	1.00
Frpb, ped/bikes	1.00	0.99		1.00	0.99		1.00	1.00	0.95	1.00	1.00	0.96
Flpb, ped/bikes	1.00	1.00		1.00	1.00		1.00	1.00	1.00	1.00	1.00	1.00
Frt	1.00	0.98		1.00	0.96		1.00	1.00	0.85	1.00	1.00	0.85
Flt Protected	0.95	1.00		0.95	1.00		0.95	1.00	1.00	0.95	1.00	1.00
Satd. Flow (prot)	1770	4908		1770	4818		1770	3539	1511	1770	3539	1523
Flt Permitted	0.95	1.00		0.95	1.00		0.95	1.00	1.00	0.95	1.00	1.00
Satd. Flow (perm)	1770	4908		1770	4818		1770	3539	1511	1770	3539	1523
Volume (vph)	160	899	142	150	754	280	110	301	110	310	1152	150
Peak-hour factor, PHF	0.95	0.95	0.95	0.95	0.95	0.95	0.95	0.95	0.95	0.95	0.95	0.95
Adj. Flow (vph)	168	946	149	158	794	295	116	317	116	326	1213	158
RTOR Reduction (vph)	0	17	0	0	56	0	0	0	51	0	0	33
Lane Group Flow (vph)	168	1078	0	158	1033	0	116	317	65	326	1213	125
Confl. Peds. (#/hr)			66			23			38			26
Turn Type	Prot			Prot			Prot		pm+ov	Prot		pm+ov
Protected Phases	7	4		3	8		5	2	3	1	6	7
Permitted Phases									2			6
Actuated Green, G (s)	12.0	34.0		13.6	35.6		10.4	31.4	45.0	25.0	46.0	58.0
Effective Green, g (s)	11.0	35.0		12.6	36.6		9.4	32.4	45.0	24.0	47.0	58.0
Actuated g/C Ratio	0.09	0.29		0.10	0.31		0.08	0.27	0.38	0.20	0.39	0.48
Clearance Time (s)	3.0	5.0		3.0	5.0		3.0	5.0	3.0	3.0	5.0	3.0
Vehicle Extension (s)	2.0	2.0		2.0	2.0		2.0	2.0	2.0	2.0	2.0	2.0
Lane Grp Cap (vph)	162	1432		186	1469		139	956	617	354	1386	787
v/s Ratio Prot	c0.09	c0.22		0.09	0.21		0.07	0.09	0.01	c0.18	c0.34	0.01
v/s Ratio Perm									0.03			0.07
v/c Ratio	1.04	0.75		0.85	0.70		0.83	0.33	0.11	0.92	0.88	0.16
Uniform Delay, d1	54.5	38.6		52.8	36.9		54.5	35.1	24.4	47.1	33.8	17.4
Progression Factor	1.00	1.00		1.00	1.00		1.00	1.00	1.00	1.00	1.00	1.00
Incremental Delay, d2	80.8	3.7		27.6	2.8		31.8	0.9	0.0	28.3	8.0	0.0
Delay (s)	135.3	42.3		80.4	39.7		86.3	36.0	24.4	75.3	41.8	17.4
Level of Service	F	D		F	D		F	D	C	E	D	B
Approach Delay (s)		54.7			44.9			44.2			45.9	
Approach LOS		D			D			D			D	

Intersection Summary			
HCM Average Control Delay	47.8	HCM Level of Service	D
HCM Volume to Capacity ratio	0.84		
Actuated Cycle Length (s)	120.0	Sum of lost time (s)	12.0
Intersection Capacity Utilization	82.5%	ICU Level of Service	E
Analysis Period (min)	15		

c Critical Lane Group

Movement	EBL	EBT	EBR	WBL	WBT	WBR	NBL	NBT	NBR	SBL	SBT	SBR
Lane Configurations												
Ideal Flow (vphpl)	1900	1900	1900	1900	1900	1900	1900	1900	1900	1900	1900	1900
Total Lost time (s)		4.0			4.0		4.0	4.0		4.0	4.0	
Lane Util. Factor		1.00			1.00		1.00	0.95		1.00	0.95	
Frpb, ped/bikes		0.93			0.96		1.00	0.99		1.00	0.99	
Flpb, ped/bikes		0.97			0.96		0.94	1.00		0.93	1.00	
Frt		0.95			0.95		1.00	0.99		1.00	0.99	
Flt Protected		0.98			0.99		0.95	1.00		0.95	1.00	
Satd. Flow (prot)		1580			1606		1665	3456		1640	3468	
Flt Permitted		0.72			0.86		0.36	1.00		0.42	1.00	
Satd. Flow (perm)		1164			1395		637	3456		730	3468	
Volume (vph)	42	30	40	50	60	64	60	531	40	32	657	42
Peak-hour factor, PHF	0.95	0.95	0.95	0.95	0.95	0.95	0.95	0.95	0.95	0.95	0.95	0.95
Adj. Flow (vph)	44	32	42	53	63	67	63	559	42	34	692	44
RTOR Reduction (vph)	0	28	0	0	29	0	0	4	0	0	3	0
Lane Group Flow (vph)	0	90	0	0	154	0	63	597	0	34	733	0
Confl. Peds. (#/hr)	100		100	100		100	100		100	100		100
Turn Type	Perm			Perm			Perm			Perm		
Protected Phases		4			4			2			6	
Permitted Phases	4			4			2			6		
Actuated Green, G (s)		12.7			12.7		65.3	65.3		65.3	65.3	
Effective Green, g (s)		12.2			12.2		64.8	64.8		64.8	64.8	
Actuated g/C Ratio		0.14			0.14		0.76	0.76		0.76	0.76	
Clearance Time (s)		3.5			3.5		3.5	3.5		3.5	3.5	
Vehicle Extension (s)		2.0			2.0		2.0	2.0		2.0	2.0	
Lane Grp Cap (vph)		167			200		486	2635		557	2644	
v/s Ratio Prot								0.17			c0.21	
v/s Ratio Perm		0.08			c0.11		0.10			0.05		
v/c Ratio		0.54			0.77		0.13	0.23		0.06	0.28	
Uniform Delay, d1		33.8			35.0		2.7	2.9		2.5	3.0	
Progression Factor		1.00			1.00		1.00	1.00		0.73	0.64	
Incremental Delay, d2		1.7			14.7		0.6	0.2		0.2	0.2	
Delay (s)		35.4			49.8		3.2	3.1		2.0	2.2	
Level of Service		D			D		A	A		A	A	
Approach Delay (s)		35.4			49.8			3.1			2.2	
Approach LOS		D			D			A			A	

Intersection Summary			
HCM Average Control Delay	9.8	HCM Level of Service	A
HCM Volume to Capacity ratio	0.35		
Actuated Cycle Length (s)	85.0	Sum of lost time (s)	8.0
Intersection Capacity Utilization	54.8%	ICU Level of Service	A
Analysis Period (min)	15		

c Critical Lane Group

Movement	EBL	EBT	EBR	WBL	WBT	WBR	NBL	NBT	NBR	SBL	SBT	SBR
Lane Configurations												
Ideal Flow (vphpl)	1900	1900	1900	1900	1900	1900	1900	1900	1900	1900	1900	1900
Total Lost time (s)	4.0	4.0		4.0	4.0		4.0	4.0		4.0	4.0	
Lane Util. Factor	1.00	0.95		1.00	0.95		1.00	0.95		1.00	0.95	
Frpb, ped/bikes	1.00	0.97		1.00	0.95		1.00	0.99		1.00	0.95	
Flpb, ped/bikes	1.00	1.00		1.00	1.00		0.96	1.00		0.95	1.00	
Frt	1.00	0.97		1.00	0.96		1.00	0.98		1.00	0.96	
Flt Protected	0.95	1.00		0.95	1.00		0.95	1.00		0.95	1.00	
Satd. Flow (prot)	1770	3347		1770	3217		1692	3445		1677	3222	
Flt Permitted	0.95	1.00		0.95	1.00		0.27	1.00		0.49	1.00	
Satd. Flow (perm)	1770	3347		1770	3217		482	3445		864	3222	
Volume (vph)	260	400	100	70	370	129	70	341	40	94	533	210
Peak-hour factor, PHF	0.95	0.95	0.95	0.95	0.95	0.95	0.95	0.95	0.95	0.95	0.95	0.95
Adj. Flow (vph)	274	421	105	74	389	136	74	359	42	99	561	221
RTOR Reduction (vph)	0	24	0	0	45	0	0	9	0	0	41	0
Lane Group Flow (vph)	274	502	0	74	480	0	74	392	0	99	741	0
Confl. Peds. (#/hr)			100			100	100		100	100		100
Turn Type	Prot			Prot			Perm			Perm		
Protected Phases	7	4		3	8			2			6	
Permitted Phases							2			6		
Actuated Green, G (s)	16.1	26.6		6.8	17.3		38.1	38.1		38.1	38.1	
Effective Green, g (s)	16.6	26.1		7.3	16.8		39.6	39.6		39.6	39.6	
Actuated g/C Ratio	0.20	0.31		0.09	0.20		0.47	0.47		0.47	0.47	
Clearance Time (s)	4.5	3.5		4.5	3.5		5.5	5.5		5.5	5.5	
Vehicle Extension (s)	2.0	2.0		2.0	2.0		2.0	2.0		2.0	2.0	
Lane Grp Cap (vph)	346	1028		152	636		225	1605		403	1501	
v/s Ratio Prot	c0.15	0.15		0.04	c0.15			0.11			c0.23	
v/s Ratio Perm							0.15			0.11		
v/c Ratio	0.79	0.49		0.49	0.75		0.33	0.24		0.25	0.49	
Uniform Delay, d1	32.6	24.0		37.1	32.2		14.3	13.7		13.7	15.7	
Progression Factor	1.00	1.00		1.00	1.00		1.00	1.00		1.00	1.00	
Incremental Delay, d2	11.0	0.1		0.9	4.5		3.9	0.4		1.4	1.2	
Delay (s)	43.5	24.1		38.0	36.7		18.2	14.0		15.1	16.9	
Level of Service	D	C		D	D		B	B		B	B	
Approach Delay (s)		30.8			36.8			14.7			16.7	
Approach LOS		C			D			B			B	

Intersection Summary			
HCM Average Control Delay	24.8	HCM Level of Service	C
HCM Volume to Capacity ratio	0.62		
Actuated Cycle Length (s)	85.0	Sum of lost time (s)	12.0
Intersection Capacity Utilization	73.7%	ICU Level of Service	D
Analysis Period (min)	15		

c Critical Lane Group

Movement	EBL	EBR	NBL	NBT	SBT	SBR
Lane Configurations						
Ideal Flow (vphpl)	1900	1900	1900	1900	1900	1900
Total Lost time (s)	4.0		4.0	4.0	4.0	
Lane Util. Factor	1.00		1.00	0.95	0.95	
Frt	0.91		1.00	1.00	0.99	
Flt Protected	0.98		0.95	1.00	1.00	
Satd. Flow (prot)	1670		1770	3539	3503	
Flt Permitted	0.98		0.95	1.00	1.00	
Satd. Flow (perm)	1670		1770	3539	3503	
Volume (vph)	73	136	61	635	1067	79
Peak-hour factor, PHF	0.95	0.95	0.95	0.95	0.95	0.95
Adj. Flow (vph)	77	143	64	668	1123	83
RTOR Reduction (vph)	81	0	0	0	4	0
Lane Group Flow (vph)	139	0	64	668	1202	0
Turn Type			Prot			
Protected Phases	2		3	8	4	
Permitted Phases						
Actuated Green, G (s)	20.4		5.5	56.6	47.1	
Effective Green, g (s)	20.4		5.5	56.6	47.1	
Actuated g/C Ratio	0.24		0.06	0.67	0.55	
Clearance Time (s)	4.0		4.0	4.0	4.0	
Vehicle Extension (s)	3.0		3.0	3.0	3.0	
Lane Grp Cap (vph)	401		115	2357	1941	
v/s Ratio Prot	c0.08		c0.04	0.19	c0.34	
v/s Ratio Perm						
v/c Ratio	0.35		0.56	0.28	0.62	
Uniform Delay, d1	26.8		38.6	5.8	12.9	
Progression Factor	1.00		0.97	0.85	0.97	
Incremental Delay, d2	2.4		5.1	0.3	1.2	
Delay (s)	29.2		42.6	5.3	13.6	
Level of Service	C		D	A	B	
Approach Delay (s)	29.2			8.5	13.6	
Approach LOS	C			A	B	

Intersection Summary			
HCM Average Control Delay	13.5	HCM Level of Service	B
HCM Volume to Capacity ratio	0.54		
Actuated Cycle Length (s)	85.0	Sum of lost time (s)	12.0
Intersection Capacity Utilization	57.8%	ICU Level of Service	B
Analysis Period (min)	15		

c Critical Lane Group

Movement	EBL	EBT	EBR	WBL	WBT	WBR	NBL	NBT	NBR	SBL	SBT	SBR
Lane Configurations												
Ideal Flow (vphpl)	1900	1900	1900	1900	1900	1900	1900	1900	1900	1900	1900	1900
Lane Width	12	12	12	12	12	12	16	16	16	16	16	16
Total Lost time (s)	4.0	4.0		4.0	4.0		2.0	2.0		2.0	2.0	
Lane Util. Factor	1.00	0.91		1.00	0.91		1.00	1.00		1.00	1.00	
Frpb, ped/bikes	1.00	0.99		1.00	1.00		1.00	0.99		1.00	0.98	
Flpb, ped/bikes	1.00	1.00		1.00	1.00		1.00	1.00		0.98	1.00	
Frt	1.00	0.98		1.00	0.98		1.00	0.96		1.00	0.93	
Flt Protected	0.95	1.00		0.95	1.00		0.95	1.00		0.95	1.00	
Satd. Flow (prot)	1770	4926		1770	4969		2005	1997		1961	1920	
Flt Permitted	0.95	1.00		0.95	1.00		0.13	1.00		0.55	1.00	
Satd. Flow (perm)	1770	4926		1770	4969		271	1997		1126	1920	
Volume (vph)	340	1233	183	90	1020	150	170	248	90	140	281	270
Peak-hour factor, PHF	0.95	0.95	0.95	0.95	0.95	0.95	0.95	0.95	0.95	0.95	0.95	0.95
Adj. Flow (vph)	358	1298	193	95	1074	158	179	261	95	147	296	284
RTOR Reduction (vph)	0	20	0	0	20	0	0	15	0	0	39	0
Lane Group Flow (vph)	358	1471	0	95	1212	0	179	341	0	147	541	0
Confl. Peds. (#/hr)			32	32		4	12		24	24		12
Parking (#/hr)												0
Turn Type	Prot			Prot			pm+pt			Perm		
Protected Phases	7	4		3	8		5	2			6	
Permitted Phases							2			6		
Actuated Green, G (s)	18.0	35.8		7.5	25.3		39.7	39.7		28.7	28.7	
Effective Green, g (s)	18.0	35.8		7.5	25.3		40.2	40.2		29.2	29.2	
Actuated g/C Ratio	0.19	0.38		0.08	0.27		0.43	0.43		0.31	0.31	
Clearance Time (s)	4.0	4.0		4.0	4.0		4.0	2.5		2.5	2.5	
Vehicle Extension (s)	3.0	3.0		3.0	3.0		3.0	3.0		3.0	3.0	
Lane Grp Cap (vph)	341	1886		142	1345		283	859		352	600	
v/s Ratio Prot	c0.20	0.30		0.05	c0.24		c0.06	0.17			c0.28	
v/s Ratio Perm							0.21			0.13		
v/c Ratio	1.05	0.78		0.67	0.90		0.63	0.40		0.42	0.90	
Uniform Delay, d1	37.8	25.4		41.8	32.9		21.7	18.3		25.4	30.8	
Progression Factor	1.00	1.00		1.00	1.00		1.00	1.00		1.00	1.00	
Incremental Delay, d2	62.4	3.3		11.3	9.9		4.6	0.3		0.8	16.9	
Delay (s)	100.1	28.7		53.1	42.8		26.3	18.6		26.2	47.6	
Level of Service	F	C		D	D		C	B		C	D	
Approach Delay (s)		42.5			43.6			21.2			43.3	
Approach LOS		D			D			C			D	

Intersection Summary			
HCM Average Control Delay	40.4	HCM Level of Service	D
HCM Volume to Capacity ratio	0.90		
Actuated Cycle Length (s)	93.5	Sum of lost time (s)	12.0
Intersection Capacity Utilization	96.6%	ICU Level of Service	F
Analysis Period (min)	15		

c Critical Lane Group

Movement	EBL	EBT	EBR	WBL	WBT	WBR	NBL	NBT	NBR	SBL	SBT	SBR
Lane Configurations												
Ideal Flow (vphpl)	1900	1900	1900	1900	1900	1900	1900	1900	1900	1900	1900	1900
Total Lost time (s)		4.0		4.0	4.0			4.0		4.0	4.0	
Lane Util. Factor		1.00		0.95	0.95			0.95		1.00	0.95	
Frpb, ped/bikes		1.00		1.00	0.97			0.98		1.00	0.95	
Flpb, ped/bikes		0.99		1.00	1.00			1.00		1.00	1.00	
Frt		0.93		1.00	0.92			0.96		1.00	0.95	
Flt Protected		0.99		0.95	1.00			1.00		0.95	1.00	
Satd. Flow (prot)		1705		1681	1578			3316		1770	3193	
Flt Permitted		0.36		0.73	1.00			0.94		0.95	1.00	
Satd. Flow (perm)		619		1290	1578			3128		1770	3193	
Volume (vph)	10	10	20	117	110	120	10	1134	485	120	821	410
Peak-hour factor, PHF	0.95	0.95	0.95	0.95	0.95	0.95	0.95	0.95	0.95	0.95	0.95	0.95
Adj. Flow (vph)	11	11	21	123	116	126	11	1194	511	126	864	432
RTOR Reduction (vph)	0	20	0	0	43	0	0	39	0	0	50	0
Lane Group Flow (vph)	0	23	0	123	199	0	0	1677	0	126	1246	0
Confl. Peds. (#/hr)	36					36	48		16	16		48
Turn Type	Perm			Perm			Perm			Prot		
Protected Phases		7			8			2		1	6	
Permitted Phases	7			8			2					
Actuated Green, G (s)		6.5		16.0	16.0			48.7		10.8	64.0	
Effective Green, g (s)		7.0		16.5	16.5			49.2		11.3	64.5	
Actuated g/C Ratio		0.07		0.16	0.16			0.49		0.11	0.64	
Clearance Time (s)		4.5		4.5	4.5			4.5		4.5	4.5	
Vehicle Extension (s)		2.0		2.0	2.0			2.0		2.0	2.0	
Lane Grp Cap (vph)		43		213	260			1539		200	2059	
v/s Ratio Prot										0.07	c0.39	
v/s Ratio Perm		c0.04		0.10	0.13			c0.54				
v/c Ratio		0.55		0.58	0.77			1.09		0.63	0.61	
Uniform Delay, d1		45.0		38.5	39.9			25.4		42.4	10.3	
Progression Factor		1.00		1.00	1.00			0.60		1.00	1.00	
Incremental Delay, d2		7.4		2.4	11.5			41.7		4.7	1.3	
Delay (s)		52.3		40.9	51.4			56.9		47.0	11.7	
Level of Service		D		D	D			E		D	B	
Approach Delay (s)		52.3			47.9			56.9			14.8	
Approach LOS		D			D			E			B	

Intersection Summary			
HCM Average Control Delay	39.0	HCM Level of Service	D
HCM Volume to Capacity ratio	0.93		
Actuated Cycle Length (s)	100.0	Sum of lost time (s)	16.0
Intersection Capacity Utilization	111.7%	ICU Level of Service	H
Analysis Period (min)	15		

c Critical Lane Group

Movement	EBL	EBT	EBR	WBL	WBT	WBR	NBL	NBT	NBR	SBL	SBT	SBR
Lane Configurations												
Ideal Flow (vphpl)	1900	1900	1900	1900	1900	1900	1900	1900	1900	1900	1900	1900
Total Lost time (s)	4.0	4.0		4.0	4.0		4.0	4.0		4.0	4.0	
Lane Util. Factor	0.97	0.95		1.00	0.95		1.00	0.95		1.00	0.95	
Frpb, ped/bikes	1.00	0.99		1.00	0.99		1.00	0.97		1.00	0.98	
Flpb, ped/bikes	1.00	1.00		1.00	1.00		1.00	1.00		1.00	1.00	
Frt	1.00	0.99		1.00	0.95		1.00	0.97		1.00	0.99	
Flt Protected	0.95	1.00		0.95	1.00		0.95	1.00		0.95	1.00	
Satd. Flow (prot)	3433	3456		1770	3308		1770	3323		1770	3414	
Flt Permitted	0.95	1.00		0.95	1.00		0.95	1.00		0.95	1.00	
Satd. Flow (perm)	3433	3456		1770	3308		1770	3323		1770	3414	
Volume (vph)	460	880	83	120	510	290	90	899	260	220	688	60
Peak-hour factor, PHF	0.95	0.95	0.95	0.95	0.95	0.95	0.95	0.95	0.95	0.95	0.95	0.95
Adj. Flow (vph)	484	926	87	126	537	305	95	946	274	232	724	63
RTOR Reduction (vph)	0	7	0	0	79	0	0	27	0	0	7	0
Lane Group Flow (vph)	484	1006	0	126	763	0	95	1193	0	232	780	0
Confl. Peds. (#/hr)	15		48	48		15	123		48	48		123
Turn Type	Prot			Prot			Prot			Prot		
Protected Phases	7	4		3	8		5	2		1	6	
Permitted Phases												
Actuated Green, G (s)	15.7	28.3		10.0	22.6		5.0	32.7		12.0	39.7	
Effective Green, g (s)	15.2	29.3		9.5	23.6		4.5	33.7		11.5	40.7	
Actuated g/C Ratio	0.15	0.29		0.10	0.24		0.04	0.34		0.12	0.41	
Clearance Time (s)	3.5	5.0		3.5	5.0		3.5	5.0		3.5	5.0	
Vehicle Extension (s)	2.0	2.0		2.0	2.0		2.0	2.0		2.0	2.0	
Lane Grp Cap (vph)	522	1013		168	781		80	1120		204	1389	
v/s Ratio Prot	c0.14	c0.29		0.07	0.23		0.05	c0.36		c0.13	0.23	
v/s Ratio Perm												
v/c Ratio	0.93	0.99		0.75	0.98		1.19	1.07		1.14	0.56	
Uniform Delay, d1	41.9	35.2		44.1	37.9		47.8	33.1		44.2	22.8	
Progression Factor	1.00	1.00		1.00	1.00		1.00	1.00		1.22	0.74	
Incremental Delay, d2	22.3	26.4		15.3	26.1		159.7	46.2		98.6	1.3	
Delay (s)	64.2	61.6		59.4	64.0		207.4	79.4		152.5	18.3	
Level of Service	E	E		E	E		F	E		F	B	
Approach Delay (s)		62.5			63.4			88.6			48.8	
Approach LOS		E			E			F			D	

Intersection Summary			
HCM Average Control Delay	66.9	HCM Level of Service	E
HCM Volume to Capacity ratio	1.01		
Actuated Cycle Length (s)	100.0	Sum of lost time (s)	12.0
Intersection Capacity Utilization	96.6%	ICU Level of Service	F
Analysis Period (min)	15		

c Critical Lane Group

Movement	EBL	EBT	EBR	WBL	WBT	WBR	NBL	NBT	NBR	SBL	SBT	SBR
Lane Configurations												
Ideal Flow (vphpl)	1900	1900	1900	1900	1900	1900	1900	1900	1900	1900	1900	1900
Total Lost time (s)		4.0						4.0		4.0	4.0	
Lane Util. Factor		1.00						0.95		0.97	0.95	
Frt		0.86						0.94		1.00	0.98	
Flt Protected		1.00						1.00		0.95	1.00	
Satd. Flow (prot)		1611						3318		3433	3453	
Flt Permitted		1.00						0.95		0.95	1.00	
Satd. Flow (perm)		1611						3145		3433	3453	
Volume (vph)	0	0	10	0	0	0	10	415	299	1500	307	60
Peak-hour factor, PHF	0.95	0.95	0.95	0.95	0.95	0.95	0.95	0.95	0.95	0.95	0.95	0.95
Adj. Flow (vph)	0	0	11	0	0	0	11	437	315	1579	323	63
RTOR Reduction (vph)	0	11	0	0	0	0	0	20	0	0	0	0
Lane Group Flow (vph)	0	0	0	0	0	0	0	743	0	1579	386	0
Turn Type							Perm			Prot		
Protected Phases								2		1	6	
Permitted Phases							2					
Actuated Green, G (s)		0.0						13.0		29.0	50.0	
Effective Green, g (s)		0.0						13.0		29.0	50.0	
Actuated g/C Ratio		0.00						0.26		0.58	1.00	
Clearance Time (s)								4.0		4.0	2.0	
Lane Grp Cap (vph)		0						818		1991	3453	
v/s Ratio Prot										c0.46	0.11	
v/s Ratio Perm								c0.24				
v/c Ratio		0.00						0.91		0.79	0.11	
Uniform Delay, d1		25.0						17.9		8.2	0.0	
Progression Factor		1.00						0.74		1.00	1.00	
Incremental Delay, d2		0.0						15.0		3.3	0.1	
Delay (s)		25.0						28.2		11.5	0.1	
Level of Service		C						C		B	A	
Approach Delay (s)		25.0			0.0			28.2			9.3	
Approach LOS		C			A			C			A	

Intersection Summary			
HCM Average Control Delay	14.6	HCM Level of Service	B
HCM Volume to Capacity ratio	0.83		
Actuated Cycle Length (s)	50.0	Sum of lost time (s)	8.0
Intersection Capacity Utilization	77.5%	ICU Level of Service	D
Analysis Period (min)	15		

c Critical Lane Group

Movement	EBL	EBT	EBR	WBL	WBT	WBR	NBL	NBT	NBR	SBL	SBT	SBR
Lane Configurations												
Ideal Flow (vphpl)	1900	1900	1900	1900	1900	1900	1900	1900	1900	1900	1900	1900
Total Lost time (s)		4.0			4.0			4.0			4.0	
Lane Util. Factor		1.00			1.00			0.95			0.95	
Frpb, ped/bikes		0.97			0.97			0.99			0.99	
Flpb, ped/bikes		0.98			0.97			1.00			0.99	
Frt		0.97			0.96			0.98			0.99	
Flt Protected		0.99			0.99			1.00			0.99	
Satd. Flow (prot)		1695			1658			3411			3442	
Flt Permitted		0.88			0.92			0.93			0.82	
Satd. Flow (perm)		1518			1540			3175			2850	
Volume (vph)	30	50	21	50	100	70	31	564	80	50	277	20
Peak-hour factor, PHF	0.95	0.95	0.95	0.95	0.95	0.95	0.95	0.95	0.95	0.95	0.95	0.95
Adj. Flow (vph)	32	53	22	53	105	74	33	594	84	53	292	21
RTOR Reduction (vph)	0	15	0	0	34	0	0	21	0	0	9	0
Lane Group Flow (vph)	0	92	0	0	198	0	0	690	0	0	357	0
Confl. Peds. (#/hr)	100		100	100		100	100		100	100		100
Turn Type	Perm			Perm			Perm			Perm		
Protected Phases		4			8			2			6	
Permitted Phases	4			8			2			6		
Actuated Green, G (s)		17.0			17.0			25.0			25.0	
Effective Green, g (s)		17.0			17.0			25.0			25.0	
Actuated g/C Ratio		0.34			0.34			0.50			0.50	
Clearance Time (s)		4.0			4.0			4.0			4.0	
Lane Grp Cap (vph)		516			524			1588			1425	
v/s Ratio Prot												
v/s Ratio Perm		0.06			c0.13			c0.22			0.13	
v/c Ratio		0.18			0.38			0.43			0.25	
Uniform Delay, d1		11.6			12.5			8.0			7.1	
Progression Factor		1.00			1.00			1.00			1.00	
Incremental Delay, d2		0.8			2.1			0.9			0.4	
Delay (s)		12.4			14.6			8.9			7.6	
Level of Service		B			B			A			A	
Approach Delay (s)		12.4			14.6			8.9			7.6	
Approach LOS		B			B			A			A	

Intersection Summary			
HCM Average Control Delay	9.7	HCM Level of Service	A
HCM Volume to Capacity ratio	0.41		
Actuated Cycle Length (s)	50.0	Sum of lost time (s)	8.0
Intersection Capacity Utilization	68.6%	ICU Level of Service	C
Analysis Period (min)	15		
c Critical Lane Group			

Movement	EBL	EBT	EBR	WBL	WBT	WBR	NBL	NBT	NBR	SBL	SBT	SBR
Lane Configurations												
Ideal Flow (vphpl)	1900	1900	1900	1900	1900	1900	1900	1900	1900	1900	1900	1900
Total Lost time (s)		4.0			4.0			4.0			4.0	
Lane Util. Factor		1.00			1.00			0.95			0.91	
Frpb, ped/bikes		0.95			0.97			0.99			0.98	
Flpb, ped/bikes		0.97			0.98			1.00			1.00	
Frt		0.95			0.97			0.99			0.99	
Flt Protected		0.98			0.99			1.00			1.00	
Satd. Flow (prot)		1619			1680			3467			4931	
Flt Permitted		0.81			0.83			0.87			0.85	
Satd. Flow (perm)		1325			1412			3007			4205	
Volume (vph)	60	60	60	32	60	30	50	1507	62	30	984	70
Peak-hour factor, PHF	0.95	0.95	0.95	0.95	0.95	0.95	0.95	0.95	0.95	0.95	0.95	0.95
Adj. Flow (vph)	63	63	63	34	63	32	53	1586	65	32	1036	74
RTOR Reduction (vph)	0	27	0	0	5	0	0	2	0	0	5	0
Lane Group Flow (vph)	0	162	0	0	124	0	0	1702	0	0	1137	0
Confl. Peds. (#/hr)	100		100	100		100	100		100	100		100
Turn Type	Perm			Perm			Perm			Perm		
Protected Phases		4			4			2			6	
Permitted Phases	4			4			2			6		
Actuated Green, G (s)		12.2			12.2			58.8			58.8	
Effective Green, g (s)		12.7			12.7			59.3			59.3	
Actuated g/C Ratio		0.16			0.16			0.74			0.74	
Clearance Time (s)		4.5			4.5			4.5			4.5	
Vehicle Extension (s)		2.0			2.0			2.0			2.0	
Lane Grp Cap (vph)		210			224			2229			3117	
v/s Ratio Prot												
v/s Ratio Perm		c0.12			0.09			c0.57			0.27	
v/c Ratio		0.77			0.55			0.76			0.36	
Uniform Delay, d1		32.3			31.0			6.2			3.7	
Progression Factor		1.00			1.00			1.81			1.00	
Incremental Delay, d2		14.7			1.7			1.0			0.3	
Delay (s)		47.0			32.7			12.2			4.0	
Level of Service		D			C			B			A	
Approach Delay (s)		47.0			32.7			12.2			4.0	
Approach LOS		D			C			B			A	

Intersection Summary			
HCM Average Control Delay	12.1	HCM Level of Service	B
HCM Volume to Capacity ratio	0.76		
Actuated Cycle Length (s)	80.0	Sum of lost time (s)	8.0
Intersection Capacity Utilization	104.4%	ICU Level of Service	G
Analysis Period (min)	15		
c Critical Lane Group			

Movement	EBL	EBT	EBR	WBL	WBT	WBR	NBL	NBT	NBR	SBL	SBT	SBR
Lane Configurations												
Ideal Flow (vphpl)	1900	1900	1900	1900	1900	1900	1900	1900	1900	1900	1900	1900
Total Lost time (s)	4.0	4.0		4.0	4.0		4.0	4.0		4.0	4.0	
Lane Util. Factor	1.00	0.95		1.00	0.95		1.00	1.00		1.00	1.00	
Frpb, ped/bikes	1.00	1.00		1.00	0.99		1.00	1.00		1.00	1.00	
Flpb, ped/bikes	1.00	1.00		1.00	1.00		0.98	1.00		1.00	1.00	
Frt	1.00	0.99		1.00	0.98		1.00	0.98		1.00	0.98	
Flt Protected	0.95	1.00		0.95	1.00		0.95	1.00		0.95	1.00	
Satd. Flow (prot)	1761	3487		1766	3440		1738	1818		1764	1817	
Flt Permitted	0.28	1.00		0.16	1.00		0.57	1.00		0.36	1.00	
Satd. Flow (perm)	516	3487		294	3440		1050	1818		669	1817	
Volume (vph)	40	839	80	53	574	103	130	391	65	106	200	30
Peak-hour factor, PHF	0.95	0.95	0.95	0.95	0.95	0.95	0.95	0.95	0.95	0.95	0.95	0.95
Adj. Flow (vph)	42	883	84	56	604	108	137	412	68	112	211	32
RTOR Reduction (vph)	0	9	0	0	18	0	0	8	0	0	7	0
Lane Group Flow (vph)	42	958	0	56	694	0	137	473	0	112	236	0
Confl. Peds. (#/hr)	12		12	12		12	42		12	12		42
Turn Type	Perm			Perm			Perm			Perm		
Protected Phases		4			8			2			6	
Permitted Phases	4			8			2			6		
Actuated Green, G (s)	33.0	33.0		33.0	33.0		40.5	40.5		40.5	40.5	
Effective Green, g (s)	32.0	32.0		32.0	32.0		40.0	40.0		40.0	40.0	
Actuated g/C Ratio	0.40	0.40		0.40	0.40		0.50	0.50		0.50	0.50	
Clearance Time (s)	3.0	3.0		3.0	3.0		3.5	3.5		3.5	3.5	
Lane Grp Cap (vph)	206	1395		118	1376		525	909		335	909	
v/s Ratio Prot		c0.27			0.20			c0.26			0.13	
v/s Ratio Perm	0.08			0.19			0.13			0.17		
v/c Ratio	0.20	0.69		0.47	0.50		0.26	0.52		0.33	0.26	
Uniform Delay, d1	15.7	19.9		17.8	18.0		11.5	13.5		12.0	11.5	
Progression Factor	1.00	1.00		1.77	1.92		1.72	1.78		1.00	1.00	
Incremental Delay, d2	2.2	2.8		10.8	1.1		0.4	0.7		2.7	0.7	
Delay (s)	17.9	22.6		42.3	35.6		20.2	24.8		14.7	12.2	
Level of Service	B	C		D	D		C	C		B	B	
Approach Delay (s)		22.4			36.1			23.8			13.0	
Approach LOS		C			D			C			B	

Intersection Summary			
HCM Average Control Delay	25.3	HCM Level of Service	C
HCM Volume to Capacity ratio	0.59		
Actuated Cycle Length (s)	80.0	Sum of lost time (s)	8.0
Intersection Capacity Utilization	82.2%	ICU Level of Service	E
Analysis Period (min)	15		
c Critical Lane Group			

Movement	EBL	EBT	EBR	WBL	WBT	WBR	NBL	NBT	NBR	SBL	SBT	SBR
Lane Configurations												
Ideal Flow (vphpl)	1900	1900	1900	1900	1900	1900	1900	1900	1900	1900	1900	1900
Total Lost time (s)	4.0	4.0		4.0	4.0			4.0			4.0	
Lane Util. Factor	1.00	0.95		1.00	0.95			0.95			0.95	
Frpb, ped/bikes	1.00	0.99		1.00	1.00			1.00			1.00	
Flpb, ped/bikes	0.99	1.00		0.99	1.00			1.00			1.00	
Frt	1.00	0.99		1.00	0.99			0.98			0.98	
Flt Protected	0.95	1.00		0.95	1.00			0.99			0.99	
Satd. Flow (prot)	1757	3471		1750	3488			3420			3424	
Flt Permitted	0.22	1.00		0.16	1.00			0.81			0.87	
Satd. Flow (perm)	406	3471		295	3488			2817			3003	
Volume (vph)	50	931	80	60	640	53	100	281	59	33	180	40
Peak-hour factor, PHF	0.97	0.97	0.97	0.97	0.97	0.97	0.97	0.97	0.97	0.97	0.97	0.97
Adj. Flow (vph)	52	960	82	62	660	55	103	290	61	34	186	41
RTOR Reduction (vph)	0	8	0	0	8	0	0	3	0	0	17	0
Lane Group Flow (vph)	52	1034	0	62	707	0	0	451	0	0	244	0
Confl. Peds. (#/hr)	24		78	78		24	8		6	6		8
Turn Type	Perm			Perm			Perm			Perm		
Protected Phases		4			8			2			6	
Permitted Phases	4			8			2			6		
Actuated Green, G (s)	24.0	24.0		24.0	24.0			46.0			46.0	
Effective Green, g (s)	25.0	25.0		25.0	25.0			47.0			47.0	
Actuated g/C Ratio	0.31	0.31		0.31	0.31			0.59			0.59	
Clearance Time (s)	5.0	5.0		5.0	5.0			5.0			5.0	
Lane Grp Cap (vph)	127	1085		92	1090			1655			1764	
v/s Ratio Prot		c0.30			0.20							
v/s Ratio Perm	0.13			0.21				c0.16			0.08	
v/c Ratio	0.41	0.95		0.67	0.65			0.27			0.14	
Uniform Delay, d1	21.7	26.9		24.0	23.7			8.1			7.4	
Progression Factor	0.49	0.51		0.92	0.93			1.01			1.00	
Incremental Delay, d2	7.5	15.2		28.9	2.6			0.3			0.2	
Delay (s)	18.2	29.0		51.1	24.5			8.5			7.6	
Level of Service	B	C		D	C			A			A	
Approach Delay (s)		28.5			26.7			8.5			7.6	
Approach LOS		C			C			A			A	

Intersection Summary			
HCM Average Control Delay	22.3	HCM Level of Service	C
HCM Volume to Capacity ratio	0.51		
Actuated Cycle Length (s)	80.0	Sum of lost time (s)	8.0
Intersection Capacity Utilization	72.0%	ICU Level of Service	C
Analysis Period (min)	15		
c Critical Lane Group			

Movement	EBL	EBT	EBR	WBL	WBT	WBR	NBL	NBT	NBR	SBL	SBT	SBR
Lane Configurations												
Ideal Flow (vphpl)	1900	1900	1900	1900	1900	1900	1900	1900	1900	1900	1900	1900
Total Lost time (s)	4.0	4.0		4.0	4.0			4.0			4.0	
Lane Util. Factor	1.00	0.95		1.00	0.95			0.95			0.95	
Frpb, ped/bikes	1.00	1.00		1.00	0.99			0.99			1.00	
Flpb, ped/bikes	1.00	1.00		0.99	1.00			1.00			1.00	
Frt	1.00	0.99		1.00	0.97			0.97			0.98	
Flt Protected	0.95	1.00		0.95	1.00			0.99			0.99	
Satd. Flow (prot)	1765	3483		1760	3425			3396			3433	
Flt Permitted	0.23	1.00		0.17	1.00			0.87			0.74	
Satd. Flow (perm)	427	3483		308	3425			2973			2579	
Volume (vph)	70	908	84	115	688	152	65	403	116	82	226	40
Peak-hour factor, PHF	0.99	0.99	0.99	0.99	0.99	0.99	0.99	0.99	0.99	0.99	0.99	0.99
Adj. Flow (vph)	71	917	85	116	695	154	66	407	117	83	228	40
RTOR Reduction (vph)	0	8	0	0	24	0	0	27	0	0	12	0
Lane Group Flow (vph)	71	994	0	116	825	0	0	563	0	0	339	0
Confl. Peds. (#/hr)	8		39	39		8			25	25		
Turn Type	Perm			Perm			Perm			Perm		
Protected Phases		4			8			2			6	
Permitted Phases	4			8			2			6		
Actuated Green, G (s)	35.5	35.5		35.5	35.5			38.0			38.0	
Effective Green, g (s)	35.0	35.0		35.0	35.0			37.0			37.0	
Actuated g/C Ratio	0.44	0.44		0.44	0.44			0.46			0.46	
Clearance Time (s)	3.5	3.5		3.5	3.5			3.0			3.0	
Lane Grp Cap (vph)	187	1524		135	1498			1375			1193	
v/s Ratio Prot		0.29			0.24							
v/s Ratio Perm	0.17			c0.38				c0.19			0.13	
v/c Ratio	0.38	0.65		0.86	0.55			0.41			0.28	
Uniform Delay, d1	15.2	17.7		20.3	16.7			14.3			13.3	
Progression Factor	0.95	1.03		1.53	1.64			1.36			1.00	
Incremental Delay, d2	2.7	1.0		44.9	1.4			0.8			0.6	
Delay (s)	17.1	19.3		75.9	28.7			20.2			13.9	
Level of Service	B	B		E	C			C			B	
Approach Delay (s)		19.1			34.4			20.2			13.9	
Approach LOS		B			C			C			B	

Intersection Summary			
HCM Average Control Delay	23.7	HCM Level of Service	C
HCM Volume to Capacity ratio	0.63		
Actuated Cycle Length (s)	80.0	Sum of lost time (s)	8.0
Intersection Capacity Utilization	87.9%	ICU Level of Service	E
Analysis Period (min)	15		
c Critical Lane Group			

Movement	EBT	EBR	WBL	WBT	NBL	NBR
Lane Configurations						
Ideal Flow (vphpl)	1900	1900	1900	1900	1900	1900
Total Lost time (s)	4.0		4.0	4.0	4.0	
Lane Util. Factor	0.95		1.00	0.95	1.00	
Frpb, ped/bikes	0.94		1.00	1.00	1.00	
Flpb, ped/bikes	1.00		1.00	1.00	1.00	
Frt	0.98		1.00	1.00	0.96	
Flt Protected	1.00		0.95	1.00	0.96	
Satd. Flow (prot)	3272		1770	3539	1733	
Flt Permitted	1.00		0.95	1.00	0.96	
Satd. Flow (perm)	3272		1770	3539	1733	
Volume (vph)	996	122	59	833	132	47
Peak-hour factor, PHF	0.97	0.97	0.97	0.97	0.97	0.97
Adj. Flow (vph)	1027	126	61	859	136	48
RTOR Reduction (vph)	0	0	0	0	0	0
Lane Group Flow (vph)	1153	0	61	859	184	0
Confl. Peds. (#/hr)		213	348			
Turn Type			Prot			
Protected Phases	4		3	8	2	
Permitted Phases						
Actuated Green, G (s)	50.2		5.8	60.0	12.0	
Effective Green, g (s)	50.2		5.8	60.0	12.0	
Actuated g/C Ratio	0.63		0.07	0.75	0.15	
Clearance Time (s)	4.0		4.0	4.0	4.0	
Vehicle Extension (s)	3.0		3.0	3.0	3.0	
Lane Grp Cap (vph)	2053		128	2654	260	
v/s Ratio Prot	c0.35		c0.03	0.24	c0.11	
v/s Ratio Perm						
v/c Ratio	0.56		0.48	0.32	0.71	
Uniform Delay, d1	8.6		35.6	3.3	32.3	
Progression Factor	0.77		0.83	0.79	0.84	
Incremental Delay, d2	0.9		2.1	0.2	8.2	
Delay (s)	7.5		31.8	2.9	35.3	
Level of Service	A		C	A	D	
Approach Delay (s)	7.5			4.8	35.3	
Approach LOS	A			A	D	

Intersection Summary			
HCM Average Control Delay	8.6	HCM Level of Service	A
HCM Volume to Capacity ratio	0.58		
Actuated Cycle Length (s)	80.0	Sum of lost time (s)	12.0
Intersection Capacity Utilization	55.8%	ICU Level of Service	B
Analysis Period (min)	15		
c Critical Lane Group			

Movement	EBL	EBT	EBR	WBL	WBT	WBR	NBL	NBT	NBR	SBL	SBT	SBR
Lane Configurations												
Ideal Flow (vphpl)	1900	1900	1900	1900	1900	1900	1900	1900	1900	1900	1900	1900
Total Lost time (s)	4.0	4.0		4.0	4.0		4.0	4.0		4.0	4.0	
Lane Util. Factor	1.00	0.95		1.00	0.95		1.00	0.95		1.00	0.95	
Frpb, ped/bikes	1.00	0.99		1.00	0.96		1.00	0.99		1.00	0.97	
Flpb, ped/bikes	0.94	1.00		0.98	1.00		1.00	1.00		1.00	1.00	
Frt	1.00	0.98		1.00	0.97		1.00	0.99		1.00	0.97	
Flt Protected	0.95	1.00		0.95	1.00		0.95	1.00		0.95	1.00	
Satd. Flow (prot)	1658	3417		1732	3317		1770	3474		1770	3346	
Flt Permitted	0.29	1.00		0.16	1.00		0.95	1.00		0.95	1.00	
Satd. Flow (perm)	501	3417		292	3317		1770	3474		1770	3346	
Volume (vph)	219	715	109	55	501	110	226	1260	104	110	671	165
Peak-hour factor, PHF	0.98	0.98	0.98	0.98	0.98	0.98	0.98	0.98	0.98	0.98	0.98	0.98
Adj. Flow (vph)	223	730	111	56	511	112	231	1286	106	112	685	168
RTOR Reduction (vph)	0	15	0	0	24	0	0	7	0	0	26	0
Lane Group Flow (vph)	223	826	0	56	599	0	231	1385	0	112	827	0
Confl. Peds. (#/hr)	94		86	86		94			40			111
Turn Type	Perm			Perm			Prot			Prot		
Protected Phases		4			8		5	2		1	6	
Permitted Phases	4			8								
Actuated Green, G (s)	25.5	25.5		25.5	25.5		12.6	32.8		8.2	28.4	
Effective Green, g (s)	26.0	26.0		26.0	26.0		13.1	33.3		8.7	28.9	
Actuated g/C Ratio	0.32	0.32		0.32	0.32		0.16	0.42		0.11	0.36	
Clearance Time (s)	4.5	4.5		4.5	4.5		4.5	4.5		4.5	4.5	
Vehicle Extension (s)	2.0	2.0		2.0	2.0		2.0	2.0		2.0	2.0	
Lane Grp Cap (vph)	163	1111		95	1078		290	1446		192	1209	
v/s Ratio Prot		0.24			0.18		c0.13	c0.40		0.06	0.25	
v/s Ratio Perm	c0.44			0.19								
v/c Ratio	1.37	0.74		0.59	0.56		0.80	0.96		0.58	0.68	
Uniform Delay, d1	27.0	24.0		22.5	22.2		32.2	22.7		33.9	21.7	
Progression Factor	1.03	1.04		1.00	1.00		1.04	1.12		0.91	1.20	
Incremental Delay, d2	195.0	2.0		5.9	0.4		10.5	13.0		2.7	2.9	
Delay (s)	222.9	27.1		28.4	22.6		44.1	38.5		33.6	28.9	
Level of Service	F	C		C	C		D	D		C	C	
Approach Delay (s)		68.1			23.1			39.3			29.5	
Approach LOS		E			C			D			C	

Intersection Summary			
HCM Average Control Delay	41.6	HCM Level of Service	D
HCM Volume to Capacity ratio	1.06		
Actuated Cycle Length (s)	80.0	Sum of lost time (s)	8.0
Intersection Capacity Utilization	88.4%	ICU Level of Service	E
Analysis Period (min)	15		

c Critical Lane Group

Movement	WBL	WBR	NBT	NBR	SBL	SBT
Lane Configurations						
Sign Control	Stop		Free			Free
Grade	0%		0%			0%
Volume (veh/h)	20	41	1574	30	20	805
Peak Hour Factor	0.95	0.95	0.95	0.95	0.95	0.95
Hourly flow rate (vph)	21	43	1657	32	21	847
Pedestrians	52		52			45
Lane Width (ft)	12.0		12.0			12.0
Walking Speed (ft/s)	4.0		4.0			4.0
Percent Blockage	4		4			4
Right turn flare (veh)						
Median type	None					
Median storage veh)						
Upstream signal (ft)			230			471
pX, platoon unblocked	0.81	0.75			0.75	
vC, conflicting volume	2242	941			1740	
vC1, stage 1 conf vol						
vC2, stage 2 conf vol						
vCu, unblocked vol	1892	598			1656	
tC, single (s)	6.8	6.9			4.1	
tC, 2 stage (s)						
tF (s)	3.5	3.3			2.2	
p0 queue free %	50	86			92	
cM capacity (veh/h)	42	310			278	

Direction, Lane #	WB 1	NB 1	NB 2	SB 1	SB 2	SB 3
Volume Total	64	1105	584	21	424	424
Volume Left	21	0	0	21	0	0
Volume Right	43	0	32	0	0	0
cSH	101	1700	1700	278	1700	1700
Volume to Capacity	0.64	0.65	0.34	0.08	0.25	0.25
Queue Length 95th (ft)	78	0	0	6	0	0
Control Delay (s)	89.1	0.0	0.0	19.0	0.0	0.0
Lane LOS	F			C		
Approach Delay (s)	89.1	0.0		0.5		
Approach LOS	F					

Intersection Summary			
Average Delay	2.3		
Intersection Capacity Utilization	62.9%	ICU Level of Service	B
Analysis Period (min)	15		

Movement	EBL	EBT	EBR	WBL	WBT	WBR	NBL	NBT	NBR	SBL	SBT	SBR
Lane Configurations												
Ideal Flow (vphpl)	1900	1900	1900	1900	1900	1900	1900	1900	1900	1900	1900	1900
Total Lost time (s)		4.0		4.0	4.0			4.0		4.0	4.0	
Lane Util. Factor		0.91		1.00	0.95			1.00		1.00	1.00	
Frpb, ped/bikes		1.00		1.00	0.99			1.00		1.00	0.99	
Flpb, ped/bikes		1.00		1.00	1.00			1.00		1.00	1.00	
Frt		0.99		1.00	0.97			0.98		1.00	0.98	
Flt Protected		0.99		0.95	1.00			0.99		0.95	1.00	
Satd. Flow (prot)		5019		1768	3396			1794		1764	1803	
Flt Permitted		0.74		0.30	1.00			0.70		0.26	1.00	
Satd. Flow (perm)		3725		552	3396			1263		480	1803	
Volume (vph)	110	704	30	91	661	201	80	375	90	70	273	50
Peak-hour factor, PHF	0.98	0.98	0.98	0.98	0.98	0.98	0.98	0.98	0.98	0.98	0.98	0.98
Adj. Flow (vph)	112	718	31	93	674	205	82	383	92	71	279	51
RTOR Reduction (vph)	0	5	0	0	36	0	0	9	0	0	8	0
Lane Group Flow (vph)	0	856	0	93	843	0	0	548	0	71	322	0
Confl. Peds. (#/hr)	24		4	4		24	48		12	12		48
Turn Type	Perm			Perm			Perm			Perm		
Protected Phases		4			8			2			6	
Permitted Phases	4			8			2			6		
Actuated Green, G (s)		46.0		46.0	46.0			24.0		24.0	24.0	
Effective Green, g (s)		47.0		47.0	47.0			25.0		25.0	25.0	
Actuated g/C Ratio		0.59		0.59	0.59			0.31		0.31	0.31	
Clearance Time (s)		5.0		5.0	5.0			5.0		5.0	5.0	
Lane Grp Cap (vph)		2188		324	1995			395		150	563	
v/s Ratio Prot					c0.25						0.18	
v/s Ratio Perm		0.23		0.17				c0.43		0.15		
v/c Ratio		0.39		0.29	0.42			1.39		0.47	0.57	
Uniform Delay, d1		8.8		8.2	9.1			27.5		22.2	23.0	
Progression Factor		1.00		1.69	1.77			1.00		0.79	0.78	
Incremental Delay, d2		0.5		2.1	0.6			189.4		9.9	4.0	
Delay (s)		9.4		15.9	16.6			216.9		27.3	22.0	
Level of Service		A		B	B			F		C	C	
Approach Delay (s)		9.4			16.6			216.9			23.0	
Approach LOS		A			B			F			C	

Intersection Summary			
HCM Average Control Delay	55.2	HCM Level of Service	E
HCM Volume to Capacity ratio	0.76		
Actuated Cycle Length (s)	80.0	Sum of lost time (s)	8.0
Intersection Capacity Utilization	139.8%	ICU Level of Service	H
Analysis Period (min)	15		
c Critical Lane Group			

Movement	EBL	EBT	EBR	WBL	WBT	WBR	NBL	NBT	NBR	SBL	SBT	SBR
Lane Configurations												
Ideal Flow (vphpl)	1900	1900	1900	1900	1900	1900	1900	1900	1900	1900	1900	1900
Total Lost time (s)		4.0			4.0		4.0	4.0		4.0	4.0	
Lane Util. Factor		0.91			0.91		1.00	1.00		1.00	1.00	
Frpb, ped/bikes		1.00			1.00		1.00	1.00		1.00	1.00	
Flpb, ped/bikes		1.00			1.00		1.00	1.00		1.00	1.00	
Frt		0.99			0.98		1.00	0.96		1.00	0.98	
Flt Protected		0.99			1.00		0.95	1.00		0.95	1.00	
Satd. Flow (prot)		5007			4947		1770	1786		1764	1830	
Flt Permitted		0.76			0.81		0.40	1.00		0.30	1.00	
Satd. Flow (perm)		3814			4023		742	1786		554	1830	
Volume (vph)	80	614	40	81	763	151	60	239	78	70	230	30
Peak-hour factor, PHF	0.95	0.95	0.95	0.95	0.95	0.95	0.95	0.95	0.95	0.95	0.95	0.95
Adj. Flow (vph)	84	646	42	85	803	159	63	252	82	74	242	32
RTOR Reduction (vph)	0	8	0	0	32	0	0	15	0	0	6	0
Lane Group Flow (vph)	0	764	0	0	1015	0	63	319	0	74	268	0
Confl. Peds. (#/hr)			12	12					6	6		
Turn Type	Perm			Perm			Perm			Perm		
Protected Phases		4			8			2			6	
Permitted Phases	4			8			2			6		
Actuated Green, G (s)		51.5			51.5		20.5	20.5		20.5	20.5	
Effective Green, g (s)		51.5			51.5		20.5	20.5		20.5	20.5	
Actuated g/C Ratio		0.64			0.64		0.26	0.26		0.26	0.26	
Clearance Time (s)		4.0			4.0		4.0	4.0		4.0	4.0	
Lane Grp Cap (vph)		2455			2590		190	458		142	469	
v/s Ratio Prot								c0.18			0.15	
v/s Ratio Perm		0.20			c0.25		0.08			0.13		
v/c Ratio		0.31			0.39		0.33	0.70		0.52	0.57	
Uniform Delay, d1		6.3			6.8		24.2	26.9		25.5	25.9	
Progression Factor		1.27			1.99		1.00	1.00		1.13	1.14	
Incremental Delay, d2		0.3			0.4		4.6	8.5		12.1	4.6	
Delay (s)		8.3			13.9		28.8	35.4		40.9	34.1	
Level of Service		A			B		C	D		D	C	
Approach Delay (s)		8.3			13.9			34.4			35.6	
Approach LOS		A			B			C			D	

Intersection Summary			
HCM Average Control Delay	18.4	HCM Level of Service	B
HCM Volume to Capacity ratio	0.48		
Actuated Cycle Length (s)	80.0	Sum of lost time (s)	8.0
Intersection Capacity Utilization	81.1%	ICU Level of Service	D
Analysis Period (min)	15		
c Critical Lane Group			

Movement	EBL	EBT	EBR	WBL	WBT	WBR	NBL	NBT	NBR	SBL	SBT	SBR
Lane Configurations												
Ideal Flow (vphpl)	1900	1900	1900	1900	1900	1900	1900	1900	1900	1900	1900	1900
Total Lost time (s)		4.0			4.0			4.0			4.0	
Lane Util. Factor		0.91			0.91			0.95			0.95	
Frpb, ped/bikes		1.00			1.00			1.00			1.00	
Flpb, ped/bikes		1.00			1.00			1.00			1.00	
Frt		0.99			0.97			0.97			0.97	
Flt Protected		1.00			1.00			0.99			0.98	
Satd. Flow (prot)		5016			4905			3405			3362	
Flt Permitted		0.78			0.84			0.79			0.64	
Satd. Flow (perm)		3906			4109			2701			2201	
Volume (vph)	67	675	40	69	844	221	60	296	75	130	213	82
Peak-hour factor, PHF	0.99	0.99	0.99	0.99	0.99	0.99	0.99	0.99	0.99	0.99	0.99	0.99
Adj. Flow (vph)	68	682	40	70	853	223	61	299	76	131	215	83
RTOR Reduction (vph)	0	7	0	0	51	0	0	22	0	0	26	0
Lane Group Flow (vph)	0	783	0	0	1095	0	0	414	0	0	403	0
Confl. Peds. (#/hr)	9		17	17		9	12		10	10		12
Turn Type	Perm			Perm			Perm			Perm		
Protected Phases		4			8			2			6	
Permitted Phases	4			8			2			6		
Actuated Green, G (s)		50.0			50.0			19.0			19.0	
Effective Green, g (s)		51.5			51.5			20.5			20.5	
Actuated g/C Ratio		0.64			0.64			0.26			0.26	
Clearance Time (s)		5.5			5.5			5.5			5.5	
Lane Grp Cap (vph)		2514			2645			692			564	
v/s Ratio Prot												
v/s Ratio Perm		0.20			c0.27			0.15			c0.18	
v/c Ratio		0.31			0.41			0.60			0.71	
Uniform Delay, d1		6.3			6.9			26.1			27.1	
Progression Factor		1.50			0.93			1.00			1.13	
Incremental Delay, d2		0.3			0.4			3.8			7.5	
Delay (s)		9.8			6.8			29.9			38.1	
Level of Service		A			A			C			D	
Approach Delay (s)		9.8			6.8			29.9			38.1	
Approach LOS		A			A			C			D	

Intersection Summary			
HCM Average Control Delay	16.1	HCM Level of Service	B
HCM Volume to Capacity ratio	0.50		
Actuated Cycle Length (s)	80.0	Sum of lost time (s)	8.0
Intersection Capacity Utilization	112.6%	ICU Level of Service	H
Analysis Period (min)	15		
c Critical Lane Group			

Movement	EBL	EBT	EBR	WBL	WBT	WBR	NBL	NBT	NBR	SBL	SBT	SBR
Lane Configurations												
Ideal Flow (vphpl)	1900	1900	1900	1900	1900	1900	1900	1900	1900	1900	1900	1900
Total Lost time (s)		4.0			4.0			4.0			4.0	
Lane Util. Factor		0.91			0.91			1.00			1.00	
Frpb, ped/bikes		1.00			0.99			1.00			0.96	
Flpb, ped/bikes		1.00			1.00			1.00			1.00	
Frt		1.00			0.99			0.93			0.92	
Flt Protected		1.00			1.00			0.98			0.98	
Satd. Flow (prot)		5052			4974			1695			1608	
Flt Permitted		0.76			0.93			0.85			0.85	
Satd. Flow (perm)		3833			4621			1471			1401	
Volume (vph)	90	820	10	10	933	60	10	0	10	138	0	189
Peak-hour factor, PHF	0.96	0.96	0.95	0.95	0.96	0.96	0.95	0.95	0.95	0.96	0.95	0.96
Adj. Flow (vph)	94	854	11	11	972	62	11	0	11	144	0	197
RTOR Reduction (vph)	0	1	0	0	0	0	0	8	0	0	0	0
Lane Group Flow (vph)	0	958	0	0	1045	0	0	14	0	0	341	0
Confl. Peds. (#/hr)						79						79
Turn Type	Perm			Perm			Perm			Perm		
Protected Phases		4			8			2			6	
Permitted Phases	4			8			2			6		
Actuated Green, G (s)		48.9			48.9			23.1			23.1	
Effective Green, g (s)		48.9			48.9			23.1			23.1	
Actuated g/C Ratio		0.61			0.61			0.29			0.29	
Clearance Time (s)		4.0			4.0			4.0			4.0	
Vehicle Extension (s)		3.0			3.0			3.0			3.0	
Lane Grp Cap (vph)		2343			2825			425			405	
v/s Ratio Prot												
v/s Ratio Perm		c0.25			0.23			0.01			c0.24	
v/c Ratio		0.41			0.37			0.03			0.84	
Uniform Delay, d1		8.1			7.8			20.4			26.7	
Progression Factor		0.81			1.00			1.00			0.96	
Incremental Delay, d2		0.5			0.4			0.0			14.3	
Delay (s)		7.0			8.2			20.5			40.0	
Level of Service		A			A			C			D	
Approach Delay (s)		7.0			8.2			20.5			40.0	
Approach LOS		A			A			C			D	

Intersection Summary			
HCM Average Control Delay	12.4	HCM Level of Service	B
HCM Volume to Capacity ratio	0.55		
Actuated Cycle Length (s)	80.0	Sum of lost time (s)	8.0
Intersection Capacity Utilization	73.6%	ICU Level of Service	D
Analysis Period (min)	15		
c Critical Lane Group			

Movement	EBL	EBT	EBR	WBL	WBT	WBR	NBL	NBT	NBR	SBL	SBT	SBR
Lane Configurations												
Ideal Flow (vphpl)	1900	1900	1900	1900	1900	1900	1900	1900	1900	1900	1900	1900
Total Lost time (s)		4.0			4.0		4.0	4.0		4.0	4.0	
Lane Util. Factor		0.91			0.91		1.00	0.95		1.00	0.95	
Frpb, ped/bikes		1.00			0.99		1.00	0.99		1.00	0.99	
Flpb, ped/bikes		1.00			1.00		0.99	1.00		0.99	1.00	
Frt		0.99			0.95		1.00	0.99		1.00	0.98	
Flt Protected		0.99			1.00		0.95	1.00		0.95	1.00	
Satd. Flow (prot)		4925			4755		1747	3451		1745	3463	
Flt Permitted		0.67			0.76		0.31	1.00		0.14	1.00	
Satd. Flow (perm)		3353			3620		570	3451		256	3463	
Volume (vph)	272	605	91	90	784	429	110	903	100	196	571	69
Peak-hour factor, PHF	0.95	0.95	0.95	0.95	0.95	0.95	0.95	0.95	0.95	0.95	0.95	0.95
Adj. Flow (vph)	286	637	96	95	825	452	116	951	105	206	601	73
RTOR Reduction (vph)	0	9	0	0	6	0	0	7	0	0	8	0
Lane Group Flow (vph)	0	1010	0	0	1366	0	116	1049	0	206	666	0
Confl. Peds. (#/hr)	26		19			26	39		92	92		39
Turn Type	Perm			pm+pt			Perm			Perm		
Protected Phases		4		3	8			2			6	
Permitted Phases	4			8			2			6		
Actuated Green, G (s)		38.0			38.0		34.4	34.4		34.4	34.4	
Effective Green, g (s)		39.5			39.5		35.4	35.4		35.4	35.4	
Actuated g/C Ratio		0.48			0.48		0.43	0.43		0.43	0.43	
Clearance Time (s)		5.5			5.5		5.0	5.0		5.0	5.0	
Vehicle Extension (s)		2.0			2.0		2.0	2.0		2.0	2.0	
Lane Grp Cap (vph)		1598			1725		243	1474		109	1479	
v/s Ratio Prot								0.30			0.19	
v/s Ratio Perm		0.30			c0.38		0.20			c0.81		
v/c Ratio		1.65dl			0.79		0.48	0.71		1.89	0.45	
Uniform Delay, d1		16.3			18.2		17.1	19.6		23.8	16.8	
Progression Factor		1.00			1.00		1.00	1.00		1.00	1.00	
Incremental Delay, d2		0.6			2.4		6.6	2.9		432.9	1.0	
Delay (s)		16.9			20.6		23.7	22.5		456.7	17.8	
Level of Service		B			C		C	C		F	B	
Approach Delay (s)		16.9			20.6			22.6			120.6	
Approach LOS		B			C			C			F	

Intersection Summary			
HCM Average Control Delay	40.1	HCM Level of Service	D
HCM Volume to Capacity ratio	1.31		
Actuated Cycle Length (s)	82.9	Sum of lost time (s)	8.0
Intersection Capacity Utilization	99.7%	ICU Level of Service	F
Analysis Period (min)	15		

dl Defacto Left Lane. Recode with 1 though lane as a left lane.
c Critical Lane Group

Movement	EBL	EBT	EBR	WBL	WBT	WBR	NBL	NBT	NBR	SBL	SBT	SBR
Lane Configurations												
Ideal Flow (vphpl)	1900	1900	1900	1900	1900	1900	1900	1900	1900	1900	1900	1900
Total Lost time (s)		4.0			4.0			4.0	4.0		4.0	
Lane Util. Factor		0.91			0.91			1.00	1.00		1.00	
Frpb, ped/bikes		1.00			1.00			1.00	0.89		0.94	
Flpb, ped/bikes		1.00			1.00			0.96	1.00		0.98	
Frt		0.99			1.00			1.00	0.85		0.92	
Flt Protected		1.00			1.00			0.98	1.00		0.99	
Satd. Flow (prot)		5026			5019			1748	1406		1566	
Flt Permitted		0.84			0.78			0.81	1.00		0.92	
Satd. Flow (perm)		4232			3937			1453	1406		1455	
Volume (vph)	40	857	34	100	1168	40	94	94	200	30	30	80
Peak-hour factor, PHF	0.99	0.99	0.99	0.99	0.99	0.99	0.99	0.99	0.99	0.99	0.99	0.99
Adj. Flow (vph)	40	866	34	101	1180	40	95	95	202	30	30	81
RTOR Reduction (vph)	0	5	0	0	4	0	0	0	76	0	37	0
Lane Group Flow (vph)	0	935	0	0	1317	0	0	190	126	0	104	0
Confl. Peds. (#/hr)	100		100	100		100	100		100	100		100
Turn Type	Perm			Perm			Perm		Perm	Perm		
Protected Phases		4			8			2			6	
Permitted Phases	4			8			2		2	6		
Actuated Green, G (s)		49.5			49.5			24.5	24.5		24.5	
Effective Green, g (s)		48.5			48.5			23.5	23.5		23.5	
Actuated g/C Ratio		0.61			0.61			0.29	0.29		0.29	
Clearance Time (s)		3.0			3.0			3.0	3.0		3.0	
Lane Grp Cap (vph)		2566			2387			427	413		427	
v/s Ratio Prot												
v/s Ratio Perm		0.22			c0.33			c0.13	0.09		0.07	
v/c Ratio		0.36			0.55			0.44	0.31		0.24	
Uniform Delay, d1		8.0			9.3			23.0	21.9		21.5	
Progression Factor		1.00			1.00			1.00	1.00		1.00	
Incremental Delay, d2		0.4			0.9			3.3	1.9		1.4	
Delay (s)		8.4			10.2			26.3	23.8		22.9	
Level of Service		A			B			C	C		C	
Approach Delay (s)		8.4			10.2			25.0			22.9	
Approach LOS		A			B			C			C	

Intersection Summary			
HCM Average Control Delay	12.3	HCM Level of Service	B
HCM Volume to Capacity ratio	0.52		
Actuated Cycle Length (s)	80.0	Sum of lost time (s)	8.0
Intersection Capacity Utilization	108.2%	ICU Level of Service	G
Analysis Period (min)	15		

c Critical Lane Group

Movement	EBL	EBT	EBR	WBL	WBT	WBR	NBL	NBT	NBR	SBL	SBT	SBR
Lane Configurations												
Ideal Flow (vphpl)	1900	1900	1900	1900	1900	1900	1900	1900	1900	1900	1900	1900
Total Lost time (s)	4.0	4.0		4.0	4.0		4.0	4.0	4.0	4.0	4.0	4.0
Lane Util. Factor	1.00	0.91		1.00	0.91		1.00	0.95	1.00	1.00	0.95	1.00
Frpb, ped/bikes	1.00	0.98		1.00	0.99		1.00	1.00	0.94	1.00	1.00	0.95
Flpb, ped/bikes	1.00	1.00		1.00	1.00		1.00	1.00	1.00	1.00	1.00	1.00
Frt	1.00	0.98		1.00	0.97		1.00	1.00	0.85	1.00	1.00	0.85
Flt Protected	0.95	1.00		0.95	1.00		0.95	1.00	1.00	0.95	1.00	1.00
Satd. Flow (prot)	1770	4919		1770	4885		1770	3539	1488	1770	3539	1497
Flt Permitted	0.95	1.00		0.95	1.00		0.95	1.00	1.00	0.95	1.00	1.00
Satd. Flow (perm)	1770	4919		1770	4885		1770	3539	1488	1770	3539	1497
Volume (vph)	200	756	101	110	938	240	230	851	180	380	421	110
Peak-hour factor, PHF	0.95	0.95	0.95	0.95	0.95	0.95	0.95	0.95	0.95	0.95	0.95	0.95
Adj. Flow (vph)	211	796	106	116	987	253	242	896	189	400	443	116
RTOR Reduction (vph)	0	14	0	0	38	0	0	0	24	0	0	69
Lane Group Flow (vph)	211	888	0	116	1202	0	242	896	165	400	443	47
Confl. Peds. (#/hr)			81			22			50			43
Turn Type	Prot			Prot			Prot		pm+ov	Prot		pm+ov
Protected Phases	7	4		3	8		5	2	3	1	6	7
Permitted Phases									2			6
Actuated Green, G (s)	12.0	34.0		12.0	34.0		21.0	33.0	45.0	25.0	37.0	49.0
Effective Green, g (s)	11.0	35.0		11.0	35.0		20.0	34.0	45.0	24.0	38.0	49.0
Actuated g/C Ratio	0.09	0.29		0.09	0.29		0.17	0.28	0.38	0.20	0.32	0.41
Clearance Time (s)	3.0	5.0		3.0	5.0		3.0	5.0	3.0	3.0	5.0	3.0
Vehicle Extension (s)	3.0	3.0		3.0	3.0		3.0	3.0	3.0	3.0	3.0	3.0
Lane Grp Cap (vph)	162	1435		162	1425		295	1003	608	354	1121	661
v/s Ratio Prot	c0.12	0.18		0.07	c0.25		0.14	c0.25	0.02	c0.23	c0.13	0.01
v/s Ratio Perm									0.09			0.03
v/c Ratio	1.30	0.62		0.72	0.84		0.82	0.89	0.27	1.13	0.40	0.07
Uniform Delay, d1	54.5	36.7		53.0	39.9		48.3	41.3	26.1	48.0	32.0	21.6
Progression Factor	1.00	1.00		1.00	1.00		1.00	1.00	1.00	1.00	1.00	1.00
Incremental Delay, d2	173.6	2.0		14.0	6.3		16.5	12.0	0.2	87.9	1.0	0.0
Delay (s)	228.1	38.7		67.0	46.2		64.7	53.3	26.3	135.9	33.1	21.7
Level of Service	F	D		E	D		E	D	C	F	C	C
Approach Delay (s)		74.6			48.0			51.5			74.6	
Approach LOS		E			D			D			E	

Intersection Summary			
HCM Average Control Delay	60.6	HCM Level of Service	E
HCM Volume to Capacity ratio	0.99		
Actuated Cycle Length (s)	120.0	Sum of lost time (s)	20.0
Intersection Capacity Utilization	92.9%	ICU Level of Service	F
Analysis Period (min)	15		

c Critical Lane Group

Movement	EBL	EBT	EBR	WBL	WBT	WBR	NBL	NBT	NBR	SBL	SBT	SBR
Lane Configurations												
Ideal Flow (vphpl)	1900	1900	1900	1900	1900	1900	1900	1900	1900	1900	1900	1900
Total Lost time (s)		4.0			4.0		4.0	4.0		4.0	4.0	
Lane Util. Factor		1.00			1.00		1.00	0.95		1.00	0.95	
Frpb, ped/bikes		0.94			0.96		1.00	0.99		1.00	0.99	
Flpb, ped/bikes		0.97			0.97		0.96	1.00		0.95	1.00	
Frt		0.96			0.96		1.00	0.99		1.00	0.99	
Flt Protected		0.98			0.98		0.95	1.00		0.95	1.00	
Satd. Flow (prot)		1598			1642		1696	3461		1679	3455	
Flt Permitted		0.66			0.81		0.29	1.00		0.34	1.00	
Satd. Flow (perm)		1075			1345		517	3461		597	3455	
Volume (vph)	111	50	70	60	70	63	140	689	50	42	796	63
Peak-hour factor, PHF	0.95	0.95	0.95	0.95	0.95	0.95	0.95	0.95	0.95	0.95	0.95	0.95
Adj. Flow (vph)	117	53	74	63	74	66	147	725	53	44	838	66
RTOR Reduction (vph)	0	28	0	0	31	0	0	4	0	0	4	0
Lane Group Flow (vph)	0	216	0	0	172	0	147	774	0	44	900	0
Confl. Peds. (#/hr)	100		100	100		100	100		100	100		100
Turn Type	Perm			Perm			Perm			Perm		
Protected Phases		4			4			2			6	
Permitted Phases	4			4			2			6		
Actuated Green, G (s)		16.3			16.3		56.7	56.7		56.7	56.7	
Effective Green, g (s)		15.8			15.8		56.2	56.2		56.2	56.2	
Actuated g/C Ratio		0.20			0.20		0.70	0.70		0.70	0.70	
Clearance Time (s)		3.5			3.5		3.5	3.5		3.5	3.5	
Vehicle Extension (s)		2.0			2.0		2.0	2.0		2.0	2.0	
Lane Grp Cap (vph)		212			266		363	2431		419	2427	
v/s Ratio Prot								0.22			0.26	
v/s Ratio Perm		c0.20			0.13		c0.28			0.07		
v/c Ratio		1.02			0.65		0.40	0.32		0.11	0.37	
Uniform Delay, d1		32.1			29.5		4.9	4.6		3.8	4.8	
Progression Factor		1.00			1.00		1.00	1.00		1.00	1.00	
Incremental Delay, d2		66.7			4.0		3.3	0.3		0.5	0.4	
Delay (s)		98.8			33.5		8.3	4.9		4.3	5.2	
Level of Service		F			C		A	A		A	A	
Approach Delay (s)		98.8			33.5			5.4			5.2	
Approach LOS		F			C			A			A	

Intersection Summary			
HCM Average Control Delay	17.6	HCM Level of Service	B
HCM Volume to Capacity ratio	0.54		
Actuated Cycle Length (s)	80.0	Sum of lost time (s)	8.0
Intersection Capacity Utilization	65.0%	ICU Level of Service	C
Analysis Period (min)	15		

c Critical Lane Group

Movement	EBL	EBT	EBR	WBL	WBT	WBR	NBL	NBT	NBR	SBL	SBT	SBR
Lane Configurations												
Ideal Flow (vphpl)	1900	1900	1900	1900	1900	1900	1900	1900	1900	1900	1900	1900
Total Lost time (s)	4.0	4.0		4.0	4.0		4.0	4.0		4.0	4.0	
Lane Util. Factor	1.00	0.95		1.00	0.95		1.00	0.95		1.00	0.95	
Frpb, ped/bikes	1.00	0.97		1.00	0.94		1.00	0.99		1.00	0.94	
Flpb, ped/bikes	1.00	1.00		1.00	1.00		0.96	1.00		0.97	1.00	
Frt	1.00	0.97		1.00	0.95		1.00	0.99		1.00	0.94	
Flt Protected	0.95	1.00		0.95	1.00		0.95	1.00		0.95	1.00	
Satd. Flow (prot)	1770	3340		1770	3158		1697	3476		1717	3130	
Flt Permitted	0.95	1.00		0.95	1.00		0.27	1.00		0.31	1.00	
Satd. Flow (perm)	1770	3340		1770	3158		476	3476		567	3130	
Volume (vph)	140	420	110	70	440	196	170	663	50	120	516	300
Peak-hour factor, PHF	0.98	0.98	0.98	0.98	0.98	0.98	0.98	0.98	0.98	0.98	0.98	0.98
Adj. Flow (vph)	143	429	112	71	449	200	173	677	51	122	527	306
RTOR Reduction (vph)	0	27	0	0	62	0	0	6	0	0	90	0
Lane Group Flow (vph)	143	514	0	71	587	0	173	722	0	122	743	0
Confl. Peds. (#/hr)			100			100	100		100	100		100
Turn Type	Prot			Prot			Perm			Perm		
Protected Phases	7	4		3	8			2			6	
Permitted Phases							2			6		
Actuated Green, G (s)	9.5	22.5		6.7	19.7		42.3	42.3		42.3	42.3	
Effective Green, g (s)	10.0	22.0		7.2	19.2		43.8	43.8		43.8	43.8	
Actuated g/C Ratio	0.12	0.26		0.08	0.23		0.52	0.52		0.52	0.52	
Clearance Time (s)	4.5	3.5		4.5	3.5		5.5	5.5		5.5	5.5	
Vehicle Extension (s)	2.0	2.0		2.0	2.0		2.0	2.0		2.0	2.0	
Lane Grp Cap (vph)	208	864		150	713		245	1791		292	1613	
v/s Ratio Prot	c0.08	c0.15		0.04	c0.19			0.21			0.24	
v/s Ratio Perm							c0.36			0.22		
v/c Ratio	0.69	0.59		0.47	0.82		0.71	0.40		0.42	0.46	
Uniform Delay, d1	36.0	27.6		37.1	31.3		15.7	12.6		12.7	13.1	
Progression Factor	1.00	1.00		1.00	1.00		1.00	1.00		1.00	1.00	
Incremental Delay, d2	7.3	0.7		0.9	7.3		15.8	0.7		4.4	1.0	
Delay (s)	43.3	28.3		38.0	38.6		31.5	13.3		17.1	14.0	
Level of Service	D	C		D	D		C	B		B	B	
Approach Delay (s)		31.5			38.5			16.8			14.4	
Approach LOS		C			D			B			B	

Intersection Summary			
HCM Average Control Delay	24.0	HCM Level of Service	C
HCM Volume to Capacity ratio	0.77		
Actuated Cycle Length (s)	85.0	Sum of lost time (s)	16.0
Intersection Capacity Utilization	76.9%	ICU Level of Service	D
Analysis Period (min)	15		

c Critical Lane Group

Movement	EBL	EBR	NBL	NBT	SBT	SBR
Lane Configurations						
Ideal Flow (vphpl)	1900	1900	1900	1900	1900	1900
Total Lost time (s)	4.0		4.0	4.0	4.0	
Lane Util. Factor	1.00		1.00	0.95	0.95	
Frt	0.91		1.00	1.00	0.98	
Flt Protected	0.98		0.95	1.00	1.00	
Satd. Flow (prot)	1663		1770	3539	3455	
Flt Permitted	0.98		0.95	1.00	1.00	
Satd. Flow (perm)	1663		1770	3539	3455	
Volume (vph)	45	102	100	1515	702	133
Peak-hour factor, PHF	0.95	0.95	0.95	0.95	0.95	0.95
Adj. Flow (vph)	47	107	105	1595	739	140
RTOR Reduction (vph)	86	0	0	0	14	0
Lane Group Flow (vph)	68	0	105	1595	865	0
Turn Type			Prot			
Protected Phases	2		3	8	4	
Permitted Phases						
Actuated Green, G (s)	15.4		7.8	56.6	44.8	
Effective Green, g (s)	15.4		7.8	56.6	44.8	
Actuated g/C Ratio	0.19		0.10	0.71	0.56	
Clearance Time (s)	4.0		4.0	4.0	4.0	
Vehicle Extension (s)	3.0		3.0	3.0	3.0	
Lane Grp Cap (vph)	320		173	2504	1935	
v/s Ratio Prot	c0.04		0.06	c0.45	0.25	
v/s Ratio Perm						
v/c Ratio	0.21		0.61	0.64	0.45	
Uniform Delay, d1	27.2		34.6	6.2	10.3	
Progression Factor	1.00		1.00	1.00	0.66	
Incremental Delay, d2	0.3		5.9	1.3	0.6	
Delay (s)	27.5		40.5	7.5	7.4	
Level of Service	C		D	A	A	
Approach Delay (s)	27.5			9.5	7.4	
Approach LOS	C			A	A	

Intersection Summary			
HCM Average Control Delay	9.9	HCM Level of Service	A
HCM Volume to Capacity ratio	0.55		
Actuated Cycle Length (s)	80.0	Sum of lost time (s)	8.0
Intersection Capacity Utilization	57.3%	ICU Level of Service	B
Analysis Period (min)	15		

c Critical Lane Group

Movement	EBL	EBT	EBR	WBL	WBT	WBR	NBL	NBT	NBR	SBL	SBT	SBR
Lane Configurations												
Ideal Flow (vphpl)	1900	1900	1900	1900	1900	1900	1900	1900	1900	1900	1900	1900
Total Lost time (s)	4.0	4.0		4.0	4.0		4.0	4.0		4.0	4.0	
Lane Util. Factor	0.97	0.95		1.00	0.95		1.00	0.95		1.00	0.95	
Frpb, ped/bikes	1.00	0.99		1.00	0.99		1.00	0.97		1.00	0.98	
Flpb, ped/bikes	1.00	1.00		1.00	1.00		1.00	1.00		1.00	1.00	
Frt	1.00	0.99		1.00	0.95		1.00	0.97		1.00	0.99	
Flt Protected	0.95	1.00		0.95	1.00		0.95	1.00		0.95	1.00	
Satd. Flow (prot)	3433	3456		1770	3308		1770	3323		1770	3414	
Flt Permitted	0.95	1.00		0.95	1.00		0.95	1.00		0.95	1.00	
Satd. Flow (perm)	3433	3456		1770	3308		1770	3323		1770	3414	
Volume (vph)	460	880	83	120	510	290	90	899	260	220	688	60
Peak-hour factor, PHF	0.95	0.95	0.95	0.95	0.95	0.95	0.95	0.95	0.95	0.95	0.95	0.95
Adj. Flow (vph)	484	926	87	126	537	305	95	946	274	232	724	63
RTOR Reduction (vph)	0	7	0	0	79	0	0	27	0	0	6	0
Lane Group Flow (vph)	484	1006	0	126	763	0	95	1193	0	232	781	0
Confl. Peds. (#/hr)	15		48	48		15	123		48	48		123
Turn Type	Prot			Prot			Prot			Prot		
Protected Phases	7	4		3	8		5	2		1	6	
Permitted Phases												
Actuated Green, G (s)	15.6	28.5		9.1	22.0		8.3	33.2		12.2	37.1	
Effective Green, g (s)	15.1	29.5		8.6	23.0		7.8	34.2		11.7	38.1	
Actuated g/C Ratio	0.15	0.29		0.09	0.23		0.08	0.34		0.12	0.38	
Clearance Time (s)	3.5	5.0		3.5	5.0		3.5	5.0		3.5	5.0	
Vehicle Extension (s)	2.0	2.0		2.0	2.0		2.0	2.0		2.0	2.0	
Lane Grp Cap (vph)	518	1020		152	761		138	1136		207	1301	
v/s Ratio Prot	c0.14	c0.29		0.07	0.23		0.05	c0.36		c0.13	c0.23	
v/s Ratio Perm												
v/c Ratio	0.93	0.99		0.83	1.00		0.69	1.05		1.12	0.60	
Uniform Delay, d1	42.0	35.0		45.0	38.5		44.9	32.9		44.1	24.8	
Progression Factor	1.00	1.00		1.00	1.00		1.00	1.00		1.21	0.74	
Incremental Delay, d2	23.9	24.6		28.4	33.2		10.8	40.9		92.5	1.7	
Delay (s)	65.9	59.6		73.3	71.7		55.7	73.8		146.1	20.1	
Level of Service	E	E		E	E		E	E		F	C	
Approach Delay (s)		61.6			71.9			72.5			48.8	
Approach LOS		E			E			E			D	

Intersection Summary			
HCM Average Control Delay	63.9	HCM Level of Service	E
HCM Volume to Capacity ratio	1.03		
Actuated Cycle Length (s)	100.0	Sum of lost time (s)	16.0
Intersection Capacity Utilization	96.6%	ICU Level of Service	F
Analysis Period (min)	15		

c Critical Lane Group

Movement	EBL	EBT	EBR	WBL	WBT	WBR	NBL	NBT	NBR	SBL	SBT	SBR
Lane Configurations												
Ideal Flow (vphpl)	1900	1900	1900	1900	1900	1900	1900	1900	1900	1900	1900	1900
Total Lost time (s)		4.0		4.0	4.0			4.0		4.0	4.0	
Lane Util. Factor		0.91		1.00	0.95			1.00		1.00	1.00	
Frpb, ped/bikes		1.00		1.00	0.99			1.00		1.00	0.99	
Flpb, ped/bikes		1.00		1.00	1.00			1.00		1.00	1.00	
Frt		0.99		1.00	0.97			0.98		1.00	0.98	
Flt Protected		0.99		0.95	1.00			0.99		0.95	1.00	
Satd. Flow (prot)		5018		1768	3395			1793		1763	1801	
Flt Permitted		0.71		0.28	1.00			0.81		0.32	1.00	
Satd. Flow (perm)		3611		525	3395			1456		599	1801	
Volume (vph)	110	704	30	91	661	201	80	375	90	70	273	50
Peak-hour factor, PHF	0.98	0.98	0.98	0.98	0.98	0.98	0.98	0.98	0.98	0.98	0.98	0.98
Adj. Flow (vph)	112	718	31	93	674	205	82	383	92	71	279	51
RTOR Reduction (vph)	0	4	0	0	32	0	0	8	0	0	7	0
Lane Group Flow (vph)	0	857	0	93	847	0	0	549	0	71	323	0
Confl. Peds. (#/hr)	24		4	4		24	48		12	12		48
Turn Type	Perm			Perm			Perm			Perm		
Protected Phases		4			8			2			6	
Permitted Phases	4			8			2			6		
Actuated Green, G (s)		46.0		46.0	46.0			34.0		34.0	34.0	
Effective Green, g (s)		47.0		47.0	47.0			35.0		35.0	35.0	
Actuated g/C Ratio		0.52		0.52	0.52			0.39		0.39	0.39	
Clearance Time (s)		5.0		5.0	5.0			5.0		5.0	5.0	
Lane Grp Cap (vph)		1886		274	1773			566		233	700	
v/s Ratio Prot					c0.25						0.18	
v/s Ratio Perm		0.24		0.18				c0.38		0.12		
v/c Ratio		0.45		0.34	0.48			0.97		0.30	0.46	
Uniform Delay, d1		13.5		12.5	13.7			27.0		19.1	20.5	
Progression Factor		1.00		1.00	1.00			1.00		1.00	1.00	
Incremental Delay, d2		0.8		3.3	0.9			31.1		3.3	2.2	
Delay (s)		14.3		15.8	14.6			58.1		22.4	22.7	
Level of Service		B		B	B			E		C	C	
Approach Delay (s)		14.3			14.7			58.1			22.6	
Approach LOS		B			B			E			C	

Intersection Summary			
HCM Average Control Delay	24.4	HCM Level of Service	C
HCM Volume to Capacity ratio	0.69		
Actuated Cycle Length (s)	90.0	Sum of lost time (s)	8.0
Intersection Capacity Utilization	139.8%	ICU Level of Service	H
Analysis Period (min)	15		

c Critical Lane Group

APPENDIX Q:
YEAR 2030 PLUS TOWER ALTERNATIVE
INTERSECTION LEVEL OF SERVICE CALCULATION WORKSHEETS

HCM Signalized Intersection Capacity Analysis
1: 52nd St. & Shattuck Ave.

2030 AM + Tower
1/21/2008

Movement	EBL	EBT	EBR	WBL	WBT	WBR	NBL	NBT	NBR	SBL	SBT	SBR
Lane Configurations												
Ideal Flow (vphpl)	1900	1900	1900	1900	1900	1900	1900	1900	1900	1900	1900	1900
Lane Width	12	12	12	12	12	12	16	16	16	16	16	16
Total Lost time (s)	4.0	4.0		4.0	4.0		2.0	2.0		2.0	2.0	
Lane Util. Factor	1.00	0.91		1.00	0.91		1.00	1.00		1.00	1.00	
Frpb, ped/bikes	1.00	0.99		1.00	0.99		1.00	0.99		1.00	0.98	
Flpb, ped/bikes	1.00	1.00		1.00	1.00		1.00	1.00		0.99	1.00	
Frt	1.00	0.97		1.00	0.98		1.00	0.97		1.00	0.94	
Flt Protected	0.95	1.00		0.95	1.00		0.95	1.00		0.95	1.00	
Satd. Flow (prot)	1770	4900		1770	4953		2006	2036		1986	1952	
Flt Permitted	0.95	1.00		0.95	1.00		0.10	1.00		0.42	1.00	
Satd. Flow (perm)	1770	4900		1770	4953		201	2036		868	1952	
Volume (vph)	310	1001	226	120	1660	250	200	301	70	180	426	290
Peak-hour factor, PHF	0.95	0.95	0.95	0.95	0.95	0.95	0.95	0.95	0.95	0.95	0.95	0.95
Adj. Flow (vph)	326	1054	238	126	1747	263	211	317	74	189	448	305
RTOR Reduction (vph)	0	29	0	0	16	0	0	7	0	0	21	0
Lane Group Flow (vph)	326	1263	0	126	1994	0	211	384	0	189	732	0
Confl. Peds. (#/hr)			10	10		10	10		10	10		10
Turn Type	Prot			Prot			pm+pt			Perm		
Protected Phases	7	4		3	8		5	2			6	
Permitted Phases							2			6		
Actuated Green, G (s)	17.0	47.9		13.1	44.0		48.5	48.5		39.5	39.5	
Effective Green, g (s)	17.0	47.9		13.1	44.0		49.0	49.0		40.0	40.0	
Actuated g/C Ratio	0.14	0.40		0.11	0.37		0.41	0.41		0.33	0.33	
Clearance Time (s)	4.0	4.0		4.0	4.0		4.0	2.5		2.5	2.5	
Vehicle Extension (s)	3.0	3.0		3.0	3.0		3.0	3.0		3.0	3.0	
Lane Grp Cap (vph)	251	1956		193	1816		187	831		289	651	
v/s Ratio Prot	c0.18	c0.26		0.07	c0.40		c0.07	0.19			c0.38	
v/s Ratio Perm							0.39			0.22		
v/c Ratio	1.30	0.65		0.65	1.10		1.13	0.46		0.65	1.12	
Uniform Delay, d1	51.5	29.2		51.3	38.0		58.7	25.9		34.1	40.0	
Progression Factor	1.00	1.00		1.00	1.00		1.00	1.00		1.00	1.00	
Incremental Delay, d2	160.6	1.7		7.7	53.2		104.5	0.4		5.2	74.9	
Delay (s)	212.1	30.8		59.0	91.2		163.2	26.3		39.3	114.9	
Level of Service	F	C		E	F		F	C		D	F	
Approach Delay (s)		67.4			89.3			74.3			99.7	
Approach LOS		E			F			E			F	

Intersection Summary			
HCM Average Control Delay	82.7	HCM Level of Service	F
HCM Volume to Capacity ratio	1.15		
Actuated Cycle Length (s)	120.0	Sum of lost time (s)	16.0
Intersection Capacity Utilization	119.9%	ICU Level of Service	H
Analysis Period (min)	15		

c Critical Lane Group

HCM Signalized Intersection Capacity Analysis
2: 52nd St. & Telegraph Ave.

2030 AM + Tower
1/21/2008

Movement	EBL	EBT	EBR	WBL	WBT	WBR	NBL	NBT	NBR	SBL	SBT	SBR
Lane Configurations												
Ideal Flow (vphpl)	1900	1900	1900	1900	1900	1900	1900	1900	1900	1900	1900	1900
Total Lost time (s)		4.0		4.0	4.0			4.0		4.0	4.0	
Lane Util. Factor		1.00		0.95	0.95			0.95		1.00	0.95	
Frpb, ped/bikes		1.00		1.00	0.99			0.99		1.00	0.97	
Flpb, ped/bikes		1.00		1.00	1.00			1.00		1.00	1.00	
Frt		0.95		1.00	0.91			0.97		1.00	0.96	
Flt Protected		0.98		0.95	1.00			1.00		0.95	1.00	
Satd. Flow (prot)		1749		1681	1597			3417		1770	3291	
Flt Permitted		0.48		0.74	1.00			0.74		0.95	1.00	
Satd. Flow (perm)		847		1302	1597			2535		1770	3291	
Volume (vph)	10	10	10	354	330	470	10	1171	247	110	1330	460
Peak-hour factor, PHF	0.95	0.95	0.95	0.95	0.95	0.95	0.95	0.95	0.95	0.95	0.95	0.95
Adj. Flow (vph)	11	11	11	373	347	495	11	1233	260	116	1400	484
RTOR Reduction (vph)	0	10	0	0	57	0	0	18	0	0	35	0
Lane Group Flow (vph)	0	23	0	373	785	0	0	1486	0	116	1849	0
Confl. Peds. (#/hr)	4					4	44		12	12		44
Turn Type	Perm			Perm			Perm			Prot		
Protected Phases		7			8			2		1	6	
Permitted Phases	7			8			2					
Actuated Green, G (s)		5.1		26.5	26.5			32.5		7.9	44.9	
Effective Green, g (s)		5.6		27.0	27.0			33.0		8.4	45.4	
Actuated g/C Ratio		0.06		0.30	0.30			0.37		0.09	0.50	
Clearance Time (s)		4.5		4.5	4.5			4.5		4.5	4.5	
Vehicle Extension (s)		2.0		2.0	2.0			2.0		2.0	2.0	
Lane Grp Cap (vph)		53		391	479			930		165	1660	
v/s Ratio Prot										0.07	c0.56	
v/s Ratio Perm		c0.03		0.29	0.49			c0.59				
v/c Ratio		0.43		0.95	1.64			1.60		0.70	1.11	
Uniform Delay, d1		40.7		30.9	31.5			28.5		39.6	22.3	
Progression Factor		1.00		1.00	1.00			0.97		1.00	1.00	
Incremental Delay, d2		2.0		33.3	296.4			270.5		10.5	60.2	
Delay (s)		42.7		64.2	327.9			298.1		50.1	82.5	
Level of Service		D		E	F			F		D	F	
Approach Delay (s)		42.7			247.0			298.1			80.6	
Approach LOS		D			F			F			F	

Intersection Summary			
HCM Average Control Delay	191.7	HCM Level of Service	F
HCM Volume to Capacity ratio	1.49		
Actuated Cycle Length (s)	90.0	Sum of lost time (s)	16.0
Intersection Capacity Utilization	137.8%	ICU Level of Service	H
Analysis Period (min)	15		

c Critical Lane Group

Movement	EBL	EBT	EBR	WBL	WBT	WBR	NBL	NBT	NBR	SBL	SBT	SBR
Lane Configurations												
Ideal Flow (vphpl)	1900	1900	1900	1900	1900	1900	1900	1900	1900	1900	1900	1900
Total Lost time (s)	4.0	4.0		4.0	4.0		4.0	4.0		4.0	4.0	
Lane Util. Factor	0.97	0.95		1.00	0.95		1.00	0.95		1.00	0.95	
Frpb, ped/bikes	1.00	0.99		1.00	0.99		1.00	0.99		1.00	0.99	
Flpb, ped/bikes	1.00	1.00		1.00	1.00		1.00	1.00		1.00	1.00	
Frt	1.00	0.98		1.00	0.96		1.00	0.97		1.00	0.98	
Flt Protected	0.95	1.00		0.95	1.00		0.95	1.00		0.95	1.00	
Satd. Flow (prot)	3433	3427		1770	3372		1770	3403		1770	3404	
Flt Permitted	0.95	1.00		0.95	1.00		0.95	1.00		0.95	1.00	
Satd. Flow (perm)	3433	3427		1770	3372		1770	3403		1770	3404	
Volume (vph)	460	650	111	140	820	320	120	678	140	320	1164	220
Peak-hour factor, PHF	0.96	0.96	0.96	0.96	0.96	0.96	0.96	0.96	0.96	0.96	0.96	0.96
Adj. Flow (vph)	479	677	116	146	854	333	125	706	146	333	1212	229
RTOR Reduction (vph)	0	15	0	0	46	0	0	20	0	0	17	0
Lane Group Flow (vph)	479	778	0	146	1141	0	125	832	0	333	1424	0
Confl. Peds. (#/hr)	6		24	24		6	36		28	28		36
Turn Type	Prot			Prot			Prot			Prot		
Protected Phases	7	4		3	8		5	2		1	6	
Permitted Phases												
Actuated Green, G (s)	13.0	28.4		10.1	25.5		9.6	23.5		11.0	24.9	
Effective Green, g (s)	12.5	29.4		9.6	26.5		9.1	24.5		10.5	25.9	
Actuated g/C Ratio	0.14	0.33		0.11	0.29		0.10	0.27		0.12	0.29	
Clearance Time (s)	3.5	5.0		3.5	5.0		3.5	5.0		3.5	5.0	
Vehicle Extension (s)	2.0	2.0		2.0	2.0		2.0	2.0		2.0	2.0	
Lane Grp Cap (vph)	477	1119		189	993		179	926		207	980	
v/s Ratio Prot	c0.14	c0.23		0.08	c0.34		0.07	0.24		c0.19	c0.42	
v/s Ratio Perm												
v/c Ratio	1.00	0.69		0.77	1.15		0.70	0.90		1.61	1.45	
Uniform Delay, d1	38.8	26.4		39.1	31.8		39.1	31.6		39.8	32.0	
Progression Factor	1.00	1.00		1.00	1.00		1.00	1.00		1.19	0.86	
Incremental Delay, d2	42.2	1.5		16.2	79.0		9.2	13.4		276.0	204.4	
Delay (s)	81.0	27.9		55.3	110.7		48.3	44.9		323.2	232.0	
Level of Service	F	C		E	F		D	D		F	F	
Approach Delay (s)		47.9			104.7			45.3			249.1	
Approach LOS		D			F			D			F	

Intersection Summary			
HCM Average Control Delay	128.2	HCM Level of Service	F
HCM Volume to Capacity ratio	1.30		
Actuated Cycle Length (s)	90.0	Sum of lost time (s)	16.0
Intersection Capacity Utilization	105.9%	ICU Level of Service	G
Analysis Period (min)	15		

c Critical Lane Group

Movement	EBL	EBT	EBR	WBL	WBT	WBR	NBL	NBT	NBR	SBL	SBT	SBR
Lane Configurations												
Ideal Flow (vphpl)	1900	1900	1900	1900	1900	1900	1900	1900	1900	1900	1900	1900
Total Lost time (s)		4.0						4.0		4.0	4.0	
Lane Util. Factor		1.00						0.95		0.97	0.95	
Frt		0.86						0.93		1.00	0.99	
Flt Protected		1.00						1.00		0.95	1.00	
Satd. Flow (prot)		1611						3281		3433	3495	
Flt Permitted		1.00						0.94		0.95	1.00	
Satd. Flow (perm)		1611						3074		3433	3495	
Volume (vph)	0	0	10	0	0	0	10	367	350	1600	664	60
Peak-hour factor, PHF	0.95	0.95	0.95	0.95	0.95	0.95	0.95	0.95	0.95	0.95	0.95	0.95
Adj. Flow (vph)	0	0	11	0	0	0	11	386	368	1684	699	63
RTOR Reduction (vph)	0	11	0	0	0	0	0	26	0	0	0	0
Lane Group Flow (vph)	0	0	0	0	0	0	0	739	0	1684	762	0
Turn Type										Prot		
Protected Phases								2		1	6	
Permitted Phases												
Actuated Green, G (s)		0.0						8.0		29.0	45.0	
Effective Green, g (s)		0.0						8.0		29.0	45.0	
Actuated g/C Ratio		0.00						0.18		0.64	1.00	
Clearance Time (s)								4.0		4.0	2.0	
Lane Grp Cap (vph)		0						546		2212	3495	
v/s Ratio Prot										c0.49	0.22	
v/s Ratio Perm								c0.24				
v/c Ratio		0.00						11.50dr		0.76	0.22	
Uniform Delay, d1		22.5						18.5		5.6	0.0	
Progression Factor		1.00						0.78		1.00	1.00	
Incremental Delay, d2		0.0						169.6		2.5	0.1	
Delay (s)		22.5						183.9		8.1	0.1	
Level of Service		C						F		A	A	
Approach Delay (s)		22.5			0.0			183.9			5.6	
Approach LOS		C			A			F			A	

Intersection Summary			
HCM Average Control Delay	48.0	HCM Level of Service	D
HCM Volume to Capacity ratio	0.89		
Actuated Cycle Length (s)	45.0	Sum of lost time (s)	8.0
Intersection Capacity Utilization	80.7%	ICU Level of Service	D
Analysis Period (min)	15		

dr Defacto Right Lane. Recode with 1 though lane as a right lane.

c Critical Lane Group

Movement	EBL	EBT	EBR	WBL	WBT	WBR	NBL	NBT	NBR	SBL	SBT	SBR
Lane Configurations												
Ideal Flow (vphpl)	1900	1900	1900	1900	1900	1900	1900	1900	1900	1900	1900	1900
Total Lost time (s)		4.0			4.0			4.0			4.0	
Lane Util. Factor		1.00			1.00			0.95			0.95	
Frpb, ped/bikes		0.97			0.95			0.98			0.99	
Flpb, ped/bikes		0.98			0.98			1.00			1.00	
Frt		0.98			0.94			0.98			0.99	
Flt Protected		0.98			0.99			1.00			1.00	
Satd. Flow (prot)		1709			1606			3391			3476	
Flt Permitted		0.84			0.88			0.87			0.88	
Satd. Flow (perm)		1455			1427			2952			3053	
Volume (vph)	80	100	32	60	70	110	41	517	90	60	794	40
Peak-hour factor, PHF	0.95	0.95	0.95	0.95	0.95	0.95	0.95	0.95	0.95	0.95	0.95	0.95
Adj. Flow (vph)	84	105	34	63	74	116	43	544	95	63	836	42
RTOR Reduction (vph)	0	15	0	0	68	0	0	29	0	0	8	0
Lane Group Flow (vph)	0	208	0	0	185	0	0	653	0	0	933	0
Confl. Peds. (#/hr)	100		100	100		100	100		100	100		100
Turn Type	Perm			Perm			Perm			Perm		
Protected Phases		4			8			2			6	
Permitted Phases	4			8			2			6		
Actuated Green, G (s)		15.0			15.0			22.0			22.0	
Effective Green, g (s)		15.0			15.0			22.0			22.0	
Actuated g/C Ratio		0.33			0.33			0.49			0.49	
Clearance Time (s)		4.0			4.0			4.0			4.0	
Lane Grp Cap (vph)		485			476			1443			1493	
v/s Ratio Prot												
v/s Ratio Perm		c0.14			0.13			0.22			c0.31	
v/c Ratio		0.43			0.39			0.45			0.63	
Uniform Delay, d1		11.7			11.5			7.5			8.5	
Progression Factor		1.00			1.00			1.00			1.00	
Incremental Delay, d2		2.8			2.4			1.0			2.0	
Delay (s)		14.4			13.9			8.6			10.4	
Level of Service		B			B			A			B	
Approach Delay (s)		14.4			13.9			8.6			10.4	
Approach LOS		B			B			A			B	

Intersection Summary			
HCM Average Control Delay	10.7	HCM Level of Service	B
HCM Volume to Capacity ratio	0.55		
Actuated Cycle Length (s)	45.0	Sum of lost time (s)	8.0
Intersection Capacity Utilization	73.8%	ICU Level of Service	D
Analysis Period (min)	15		
c Critical Lane Group			

Movement	EBL	EBT	EBR	WBL	WBT	WBR	NBL	NBT	NBR	SBL	SBT	SBR
Lane Configurations												
Ideal Flow (vphpl)	1900	1900	1900	1900	1900	1900	1900	1900	1900	1900	1900	1900
Total Lost time (s)		4.0			4.0			4.0			4.0	
Lane Util. Factor		1.00			1.00			0.95			0.91	
Frpb, ped/bikes		0.96			0.95			0.98			0.98	
Flpb, ped/bikes		0.98			0.98			1.00			1.00	
Frt		0.96			0.96			0.99			0.99	
Flt Protected		0.98			0.99			1.00			1.00	
Satd. Flow (prot)		1639			1645			3433			4958	
Flt Permitted		0.76			0.81			0.76			0.80	
Satd. Flow (perm)		1260			1345			2614			3970	
Volume (vph)	80	100	80	53	90	70	40	1069	72	80	1926	100
Peak-hour factor, PHF	0.95	0.95	0.95	0.95	0.95	0.95	0.95	0.95	0.95	0.95	0.95	0.95
Adj. Flow (vph)	84	105	84	56	95	74	42	1125	76	84	2027	105
RTOR Reduction (vph)	0	2	0	0	24	0	0	4	0	0	4	0
Lane Group Flow (vph)	0	271	0	0	201	0	0	1239	0	0	2212	0
Confl. Peds. (#/hr)	100		100	100		100	100		100	100		100
Turn Type	Perm			Perm			Perm			Perm		
Protected Phases		4			4			2			6	
Permitted Phases	4			4			2			6		
Actuated Green, G (s)		19.4			19.4			56.6			56.6	
Effective Green, g (s)		19.9			19.9			57.1			57.1	
Actuated g/C Ratio		0.23			0.23			0.67			0.67	
Clearance Time (s)		4.5			4.5			4.5			4.5	
Vehicle Extension (s)		2.0			2.0			2.0			2.0	
Lane Grp Cap (vph)		295			315			1756			2667	
v/s Ratio Prot												
v/s Ratio Perm		c0.22			0.15			0.47			c0.56	
v/c Ratio		0.92			0.64			0.71			0.83	
Uniform Delay, d1		31.8			29.3			8.7			10.3	
Progression Factor		1.00			1.00			1.00			1.00	
Incremental Delay, d2		31.9			3.1			2.4			3.1	
Delay (s)		63.7			32.4			11.1			13.5	
Level of Service		E			C			B			B	
Approach Delay (s)		63.7			32.4			11.1			13.5	
Approach LOS		E			C			B			B	

Intersection Summary			
HCM Average Control Delay	17.3	HCM Level of Service	B
HCM Volume to Capacity ratio	0.85		
Actuated Cycle Length (s)	85.0	Sum of lost time (s)	8.0
Intersection Capacity Utilization	112.5%	ICU Level of Service	H
Analysis Period (min)	15		
c Critical Lane Group			

Movement	EBL	EBT	EBR	WBL	WBT	WBR	NBL	NBT	NBR	SBL	SBT	SBR
Lane Configurations												
Ideal Flow (vphpl)	1900	1900	1900	1900	1900	1900	1900	1900	1900	1900	1900	1900
Total Lost time (s)	4.0	4.0		4.0	4.0		4.0	4.0		4.0	4.0	
Lane Util. Factor	1.00	0.95		1.00	0.95		1.00	1.00		1.00	1.00	
Frpb, ped/bikes	1.00	0.99		1.00	0.99		1.00	1.00		1.00	1.00	
Flpb, ped/bikes	1.00	1.00		1.00	1.00		1.00	1.00		0.99	1.00	
Frt	1.00	0.96		1.00	0.98		1.00	0.99		1.00	0.98	
Flt Protected	0.95	1.00		0.95	1.00		0.95	1.00		0.95	1.00	
Satd. Flow (prot)	1770	3372		1763	3453		1768	1834		1745	1815	
Flt Permitted	0.17	1.00		0.18	1.00		0.24	1.00		0.45	1.00	
Satd. Flow (perm)	324	3372		340	3453		449	1834		822	1815	
Volume (vph)	180	510	190	94	939	115	160	381	34	203	600	110
Peak-hour factor, PHF	0.95	0.95	0.95	0.95	0.95	0.95	0.95	0.95	0.95	0.95	0.95	0.95
Adj. Flow (vph)	189	537	200	99	988	121	168	401	36	214	632	116
RTOR Reduction (vph)	0	48	0	0	12	0	0	4	0	0	3	0
Lane Group Flow (vph)	189	689	0	99	1097	0	168	433	0	214	745	0
Confl. Peds. (#/hr)	30		12	12		30	6		54	54		6
Turn Type	Perm			Perm			Perm			Perm		
Protected Phases		4			8			2			6	
Permitted Phases	4			8			2			6		
Actuated Green, G (s)	24.0	24.0		24.0	24.0		49.5	49.5		49.5	49.5	
Effective Green, g (s)	23.0	23.0		23.0	23.0		49.0	49.0		49.0	49.0	
Actuated g/C Ratio	0.29	0.29		0.29	0.29		0.61	0.61		0.61	0.61	
Clearance Time (s)	3.0	3.0		3.0	3.0		3.5	3.5		3.5	3.5	
Lane Grp Cap (vph)	93	969		98	993		275	1123		503	1112	
v/s Ratio Prot		0.20			0.32			0.24			c0.41	
v/s Ratio Perm	c0.58			0.29			0.37			0.26		
v/c Ratio	2.03	0.71		1.01	1.10		0.61	0.39		0.43	0.67	
Uniform Delay, d1	28.5	25.5		28.5	28.5		9.6	7.9		8.1	10.2	
Progression Factor	1.00	1.00		0.87	0.89		1.00	1.00		1.00	1.00	
Incremental Delay, d2	499.9	4.4		82.9	59.0		9.7	1.0		2.6	3.2	
Delay (s)	528.4	30.0		107.8	84.3		19.3	8.9		10.7	13.4	
Level of Service	F	C		F	F		B	A		B	B	
Approach Delay (s)		131.7			86.2			11.8			12.8	
Approach LOS		F			F			B			B	

Intersection Summary			
HCM Average Control Delay	66.3	HCM Level of Service	E
HCM Volume to Capacity ratio	1.10		
Actuated Cycle Length (s)	80.0	Sum of lost time (s)	8.0
Intersection Capacity Utilization	104.5%	ICU Level of Service	G
Analysis Period (min)	15		
c Critical Lane Group			

Movement	EBL	EBT	EBR	WBL	WBT	WBR	NBL	NBT	NBR	SBL	SBT	SBR
Lane Configurations												
Ideal Flow (vphpl)	1900	1900	1900	1900	1900	1900	1900	1900	1900	1900	1900	1900
Total Lost time (s)	4.0	4.0		4.0	4.0			4.0			4.0	
Lane Util. Factor	1.00	0.95		1.00	0.95			0.95			0.95	
Frpb, ped/bikes	1.00	0.99		1.00	1.00			1.00			1.00	
Flpb, ped/bikes	1.00	1.00		0.99	1.00			1.00			1.00	
Frt	1.00	0.97		1.00	0.99			0.98			0.98	
Flt Protected	0.95	1.00		0.95	1.00			0.99			0.99	
Satd. Flow (prot)	1766	3410		1749	3496			3399			3426	
Flt Permitted	0.16	1.00		0.30	1.00			0.65			0.70	
Satd. Flow (perm)	294	3410		560	3496			2235			2436	
Volume (vph)	80	566	130	76	968	73	120	281	74	124	380	70
Peak-hour factor, PHF	0.95	0.95	0.95	0.95	0.95	0.95	0.95	0.95	0.95	0.95	0.95	0.95
Adj. Flow (vph)	84	596	137	80	1019	77	126	296	78	131	400	74
RTOR Reduction (vph)	0	25	0	0	7	0	0	19	0	0	14	0
Lane Group Flow (vph)	84	708	0	80	1089	0	0	481	0	0	591	0
Confl. Peds. (#/hr)	18		54	54		18	4		18	18		4
Turn Type	Perm			Perm			Perm			Perm		
Protected Phases		4			8			2			6	
Permitted Phases	4			8			2			6		
Actuated Green, G (s)	38.0	38.0		38.0	38.0			32.0			32.0	
Effective Green, g (s)	39.0	39.0		39.0	39.0			33.0			33.0	
Actuated g/C Ratio	0.49	0.49		0.49	0.49			0.41			0.41	
Clearance Time (s)	5.0	5.0		5.0	5.0			5.0			5.0	
Lane Grp Cap (vph)	143	1662		273	1704			922			1005	
v/s Ratio Prot		0.21			c0.31							
v/s Ratio Perm	0.29			0.14				0.22			c0.24	
v/c Ratio	0.59	0.43		0.29	0.64			0.52			0.59	
Uniform Delay, d1	14.7	13.3		12.3	15.3			17.6			18.2	
Progression Factor	0.97	0.90		1.33	1.41			0.57			1.00	
Incremental Delay, d2	13.3	0.6		2.1	1.5			1.4			2.5	
Delay (s)	27.7	12.6		18.4	23.0			11.4			20.8	
Level of Service	C	B		B	C			B			C	
Approach Delay (s)		14.2			22.7			11.4			20.8	
Approach LOS		B			C			B			C	

Intersection Summary			
HCM Average Control Delay	18.3	HCM Level of Service	B
HCM Volume to Capacity ratio	0.62		
Actuated Cycle Length (s)	80.0	Sum of lost time (s)	8.0
Intersection Capacity Utilization	78.0%	ICU Level of Service	D
Analysis Period (min)	15		
c Critical Lane Group			

Movement	EBL	EBT	EBR	WBL	WBT	WBR	NBL	NBT	NBR	SBL	SBT	SBR
Lane Configurations												
Ideal Flow (vphpl)	1900	1900	1900	1900	1900	1900	1900	1900	1900	1900	1900	1900
Total Lost time (s)	4.0	4.0		4.0	4.0			4.0			4.0	
Lane Util. Factor	1.00	0.95		1.00	0.95			0.95			0.95	
Frpb, ped/bikes	1.00	1.00		1.00	1.00			0.99			1.00	
Flpb, ped/bikes	1.00	1.00		0.99	1.00			1.00			1.00	
Frt	1.00	0.99		1.00	0.98			0.97			0.98	
Flt Protected	0.95	1.00		0.95	1.00			0.99			0.99	
Satd. Flow (prot)	1766	3478		1746	3453			3371			3420	
Flt Permitted	0.15	1.00		0.30	1.00			0.80			0.74	
Satd. Flow (perm)	281	3478		556	3453			2698			2551	
Volume (vph)	50	663	61	126	958	149	49	248	77	149	476	80
Peak-hour factor, PHF	0.96	0.96	0.96	0.96	0.96	0.96	0.96	0.96	0.96	0.96	0.96	0.96
Adj. Flow (vph)	52	691	64	131	998	155	51	258	80	155	496	83
RTOR Reduction (vph)	0	9	0	0	16	0	0	29	0	0	12	0
Lane Group Flow (vph)	52	746	0	131	1137	0	0	360	0	0	722	0
Confl. Peds. (#/hr)	13		71	71		13	22		22	22		22
Turn Type	Perm			Perm			Perm			Perm		
Protected Phases		4			8			2			6	
Permitted Phases	4			8			2			6		
Actuated Green, G (s)	41.5	41.5		41.5	41.5			32.0			32.0	
Effective Green, g (s)	41.0	41.0		41.0	41.0			31.0			31.0	
Actuated g/C Ratio	0.51	0.51		0.51	0.51			0.39			0.39	
Clearance Time (s)	3.5	3.5		3.5	3.5			3.0			3.0	
Lane Grp Cap (vph)	144	1782		285	1770			1045			989	
v/s Ratio Prot		0.21			c0.33							
v/s Ratio Perm	0.19			0.24				0.13			c0.28	
v/c Ratio	0.36	0.42		0.46	0.64			0.34			0.73	
Uniform Delay, d1	11.7	12.1		12.4	14.2			17.3			20.9	
Progression Factor	1.20	1.20		1.00	1.00			0.64			1.00	
Incremental Delay, d2	6.2	0.7		5.3	1.8			0.9			4.7	
Delay (s)	20.3	15.2		17.7	16.0			12.0			25.7	
Level of Service	C	B		B	B			B			C	
Approach Delay (s)		15.6			16.2			12.0			25.7	
Approach LOS		B			B			B			C	

Intersection Summary			
HCM Average Control Delay	17.7	HCM Level of Service	B
HCM Volume to Capacity ratio	0.68		
Actuated Cycle Length (s)	80.0	Sum of lost time (s)	8.0
Intersection Capacity Utilization	103.6%	ICU Level of Service	G
Analysis Period (min)	15		
c Critical Lane Group			

Movement	EBT	EBR	WBL	WBT	NBL	NBR
Lane Configurations						
Ideal Flow (vphpl)	1900	1900	1900	1900	1900	1900
Total Lost time (s)	4.0		4.0	4.0	4.0	
Lane Util. Factor	1.00		1.00	0.95	1.00	
Frpb, ped/bikes	0.96		1.00	1.00	1.00	
Flpb, ped/bikes	1.00		1.00	1.00	1.00	
Frt	0.99		1.00	1.00	0.97	
Flt Protected	1.00		0.95	1.00	0.96	
Satd. Flow (prot)	1755		1770	3539	1735	
Flt Permitted	1.00		0.95	1.00	0.96	
Satd. Flow (perm)	1755		1770	3539	1735	
Volume (vph)	793	98	72	1099	134	44
Peak-hour factor, PHF	0.95	0.95	0.95	0.95	0.95	0.95
Adj. Flow (vph)	835	103	76	1157	141	46
RTOR Reduction (vph)	0	0	0	0	0	0
Lane Group Flow (vph)	938	0	76	1157	187	0
Confl. Peds. (#/hr)		146	266			
Turn Type			Prot			
Protected Phases	4		3	8	2	
Permitted Phases						
Actuated Green, G (s)	50.2		9.2	63.4	13.6	
Effective Green, g (s)	50.2		9.2	63.4	13.6	
Actuated g/C Ratio	0.59		0.11	0.75	0.16	
Clearance Time (s)	4.0		4.0	4.0	4.0	
Vehicle Extension (s)	3.0		3.0	3.0	3.0	
Lane Grp Cap (vph)	1036		192	2640	278	
v/s Ratio Prot	c0.53		0.04	c0.33	c0.11	
v/s Ratio Perm						
v/c Ratio	0.91		0.40	0.44	0.67	
Uniform Delay, d1	15.3		35.3	4.1	33.6	
Progression Factor	1.00		1.16	0.36	0.91	
Incremental Delay, d2	12.8		0.6	0.2	6.0	
Delay (s)	28.1		41.4	1.7	36.7	
Level of Service	C		D	A	D	
Approach Delay (s)	28.1			4.1	36.7	
Approach LOS	C			A	D	

Intersection Summary			
HCM Average Control Delay	16.3	HCM Level of Service	B
HCM Volume to Capacity ratio	0.81		
Actuated Cycle Length (s)	85.0	Sum of lost time (s)	12.0
Intersection Capacity Utilization	72.6%	ICU Level of Service	C
Analysis Period (min)	15		
c Critical Lane Group			

Movement	EBL	EBT	EBR	WBL	WBT	WBR	NBL	NBT	NBR	SBL	SBT	SBR
Lane Configurations												
Ideal Flow (vphpl)	1900	1900	1900	1900	1900	1900	1900	1900	1900	1900	1900	1900
Total Lost time (s)	4.0	4.0		4.0	4.0		4.0	4.0		4.0	4.0	
Lane Util. Factor	1.00	0.95		1.00	0.95		1.00	0.95		1.00	0.95	
Frpb, ped/bikes	1.00	0.93		1.00	0.98		1.00	0.99		1.00	0.98	
Flpb, ped/bikes	0.97	1.00		0.96	1.00		1.00	1.00		1.00	1.00	
Frt	1.00	0.94		1.00	0.98		1.00	0.98		1.00	0.97	
Flt Protected	0.95	1.00		0.95	1.00		0.95	1.00		0.95	1.00	
Satd. Flow (prot)	1719	3098		1691	3414		1770	3438		1770	3357	
Flt Permitted	0.15	1.00		0.20	1.00		0.95	1.00		0.95	1.00	
Satd. Flow (perm)	278	3098		362	3414		1770	3438		1770	3357	
Volume (vph)	146	424	267	120	716	90	135	515	59	100	1319	320
Peak-hour factor, PHF	0.95	0.95	0.95	0.95	0.95	0.95	0.95	0.95	0.95	0.95	0.95	0.95
Adj. Flow (vph)	154	446	281	126	754	95	142	542	62	105	1388	337
RTOR Reduction (vph)	0	117	0	0	11	0	0	9	0	0	23	0
Lane Group Flow (vph)	154	610	0	126	838	0	142	595	0	105	1702	0
Confl. Peds. (#/hr)	72		137	137		72			58	58		92
Turn Type	Perm			Perm			Prot			Prot		
Protected Phases		4			8		5	2		1	6	
Permitted Phases	4			8								
Actuated Green, G (s)	25.5	25.5		25.5	25.5		10.7	37.9		8.1	35.3	
Effective Green, g (s)	26.0	26.0		26.0	26.0		11.2	38.4		8.6	35.8	
Actuated g/C Ratio	0.31	0.31		0.31	0.31		0.13	0.45		0.10	0.42	
Clearance Time (s)	4.5	4.5		4.5	4.5		4.5	4.5		4.5	4.5	
Vehicle Extension (s)	2.0	2.0		2.0	2.0		2.0	2.0		2.0	2.0	
Lane Grp Cap (vph)	85	948		111	1044		233	1553		179	1414	
v/s Ratio Prot		0.20			0.25		c0.08	c0.17		0.06	c0.51	
v/s Ratio Perm	c0.55			0.35								
v/c Ratio	1.81	0.64		1.14	0.80		0.61	0.38		0.59	1.20	
Uniform Delay, d1	29.5	25.5		29.5	27.1		34.8	15.4		36.5	24.6	
Progression Factor	1.09	1.18		1.00	1.00		1.04	1.51		1.00	1.00	
Incremental Delay, d2	384.5	0.5		126.4	4.3		3.0	0.7		3.1	98.6	
Delay (s)	416.7	30.5		155.9	31.4		39.1	24.1		39.6	123.2	
Level of Service	F	C		F	C		D	C		D	F	
Approach Delay (s)		98.0			47.5			26.9			118.4	
Approach LOS		F			D			C			F	

Intersection Summary			
HCM Average Control Delay	83.4	HCM Level of Service	F
HCM Volume to Capacity ratio	1.40		
Actuated Cycle Length (s)	85.0	Sum of lost time (s)	16.0
Intersection Capacity Utilization	99.9%	ICU Level of Service	F
Analysis Period (min)	15		

c Critical Lane Group

Movement	WBL	WBR	NBT	NBR	SBL	SBT
Lane Configurations						
Sign Control	Stop		Free			Free
Grade	0%		0%			0%
Volume (veh/h)	20	31	694	20	20	1723
Peak Hour Factor	0.95	0.95	0.95	0.95	0.95	0.95
Hourly flow rate (vph)	21	33	731	21	21	1814
Pedestrians	34		33			34
Lane Width (ft)	12.0		12.0			12.0
Walking Speed (ft/s)	4.0		4.0			4.0
Percent Blockage	3		3			3
Right turn flare (veh)						
Median type	None					
Median storage veh)						
Upstream signal (ft)			230			471
pX, platoon unblocked	0.61	0.92			0.92	
vC, conflicting volume	1757	444			786	
vC1, stage 1 conf vol						
vC2, stage 2 conf vol						
vCu, unblocked vol	1192	302			675	
tC, single (s)	6.8	6.9			4.1	
tC, 2 stage (s)						
tF (s)	3.5	3.3			2.2	
p0 queue free %	79	95			97	
cM capacity (veh/h)	101	601			812	

Direction, Lane #	WB 1	NB 1	NB 2	SB 1	SB 2	SB 3
Volume Total	54	487	265	21	907	907
Volume Left	21	0	0	21	0	0
Volume Right	33	0	21	0	0	0
cSH	205	1700	1700	812	1700	1700
Volume to Capacity	0.26	0.29	0.16	0.03	0.53	0.53
Queue Length 95th (ft)	25	0	0	2	0	0
Control Delay (s)	28.7	0.0	0.0	9.5	0.0	0.0
Lane LOS	D			A		
Approach Delay (s)	28.7	0.0		0.1		
Approach LOS	D					

Intersection Summary			
Average Delay	0.7		
Intersection Capacity Utilization	64.9%	ICU Level of Service	C
Analysis Period (min)	15		

Movement	EBL	EBT	EBR	WBL	WBT	WBR	NBL	NBT	NBR	SBL	SBT	SBR
Lane Configurations												
Ideal Flow (vphpl)	1900	1900	1900	1900	1900	1900	1900	1900	1900	1900	1900	1900
Total Lost time (s)		4.0		4.0	4.0			4.0		4.0	4.0	
Lane Util. Factor		0.91		1.00	0.95			1.00		1.00	1.00	
Frpb, ped/bikes		1.00		1.00	1.00			0.99		1.00	0.99	
Flpb, ped/bikes		1.00		1.00	1.00			1.00		0.98	1.00	
Frt		0.99		1.00	0.98			0.97		1.00	0.96	
Flt Protected		0.99		0.95	1.00			0.99		0.95	1.00	
Satd. Flow (prot)		4981		1763	3448			1752		1733	1763	
Flt Permitted		0.65		0.24	1.00			0.10		0.39	1.00	
Satd. Flow (perm)		3273		454	3448			180		717	1763	
Volume (vph)	210	710	50	72	1097	191	100	184	90	200	494	200
Peak-hour factor, PHF	0.95	0.95	0.95	0.95	0.95	0.95	0.95	0.95	0.95	0.95	0.95	0.95
Adj. Flow (vph)	221	747	53	76	1155	201	105	194	95	211	520	211
RTOR Reduction (vph)	0	7	0	0	17	0	0	13	0	0	17	0
Lane Group Flow (vph)	0	1014	0	76	1339	0	0	381	0	211	714	0
Confl. Peds. (#/hr)	24		18	18		24	24		48	48		24
Turn Type	Perm			Perm			Perm			Perm		
Protected Phases		4			8			2			6	
Permitted Phases	4			8			2			6		
Actuated Green, G (s)		51.0		51.0	51.0			24.0		24.0	24.0	
Effective Green, g (s)		52.0		52.0	52.0			25.0		25.0	25.0	
Actuated g/C Ratio		0.61		0.61	0.61			0.29		0.29	0.29	
Clearance Time (s)		5.0		5.0	5.0			5.0		5.0	5.0	
Lane Grp Cap (vph)		2002		278	2109			53		211	519	
v/s Ratio Prot					c0.39						0.41	
v/s Ratio Perm		0.31		0.17				c2.12		0.29		
v/c Ratio		1.41dl		0.27	0.64			7.18		1.00	1.38	
Uniform Delay, d1		9.3		7.7	10.5			30.0		30.0	30.0	
Progression Factor		1.00		1.00	1.00			1.00		1.00	1.00	
Incremental Delay, d2		0.9		2.4	1.5			2820.3		62.0	181.0	
Delay (s)		10.2		10.1	11.9			2850.3		92.0	211.0	
Level of Service		B		B	B			F		F	F	
Approach Delay (s)		10.2			11.9			2850.3			184.3	
Approach LOS		B			B			F			F	

Intersection Summary			
HCM Average Control Delay	349.4	HCM Level of Service	F
HCM Volume to Capacity ratio	2.76		
Actuated Cycle Length (s)	85.0	Sum of lost time (s)	8.0
Intersection Capacity Utilization	158.8%	ICU Level of Service	H
Analysis Period (min)	15		

dl Defacto Left Lane. Recode with 1 though lane as a left lane.
c Critical Lane Group

Movement	EBL	EBT	EBR	WBL	WBT	WBR	NBL	NBT	NBR	SBL	SBT	SBR
Lane Configurations												
Ideal Flow (vphpl)	1900	1900	1900	1900	1900	1900	1900	1900	1900	1900	1900	1900
Total Lost time (s)		4.0			4.0		4.0	4.0		4.0	4.0	
Lane Util. Factor		0.91			0.91		1.00	1.00		1.00	1.00	
Frpb, ped/bikes		1.00			1.00		1.00	1.00		1.00	0.99	
Flpb, ped/bikes		1.00			1.00		1.00	1.00		1.00	1.00	
Frt		1.00			0.99		1.00	0.97		1.00	0.97	
Flt Protected		1.00			1.00		0.95	1.00		0.95	1.00	
Satd. Flow (prot)		5033			5008		1762	1803		1770	1802	
Flt Permitted		0.74			0.81		0.20	1.00		0.20	1.00	
Satd. Flow (perm)		3724			4061		362	1803		363	1802	
Volume (vph)	80	910	30	71	1189	111	70	304	83	150	366	80
Peak-hour factor, PHF	0.95	0.95	0.95	0.95	0.95	0.95	0.95	0.95	0.95	0.95	0.95	0.95
Adj. Flow (vph)	84	958	32	75	1252	117	74	320	87	158	385	84
RTOR Reduction (vph)	0	4	0	0	13	0	0	12	0	0	10	0
Lane Group Flow (vph)	0	1070	0	0	1431	0	74	395	0	158	459	0
Confl. Peds. (#/hr)			18	18			12					18
Turn Type	Perm			Perm			Perm			Perm		
Protected Phases		4			8			2			6	
Permitted Phases	4			8			2			6		
Actuated Green, G (s)		50.0			50.0		19.0	19.0		19.0	19.0	
Effective Green, g (s)		51.5			51.5		20.5	20.5		20.5	20.5	
Actuated g/C Ratio		0.64			0.64		0.26	0.26		0.26	0.26	
Clearance Time (s)		5.5			5.5		5.5	5.5		5.5	5.5	
Lane Grp Cap (vph)		2397			2614		93	462		93	462	
v/s Ratio Prot								0.22			0.25	
v/s Ratio Perm		0.29			c0.35		0.20			c0.43		
v/c Ratio		0.45			0.55		0.80	0.86		1.70	0.99	
Uniform Delay, d1		7.1			7.8		27.8	28.3		29.8	29.7	
Progression Factor		1.00			0.56		1.00	1.00		1.16	1.17	
Incremental Delay, d2		0.6			0.7		49.1	18.0		351.2	37.7	
Delay (s)		7.7			5.0		76.9	46.4		385.9	72.4	
Level of Service		A			A		E	D		F	E	
Approach Delay (s)		7.7			5.0			51.1			151.4	
Approach LOS		A			A			D			F	

Intersection Summary			
HCM Average Control Delay	37.2	HCM Level of Service	D
HCM Volume to Capacity ratio	0.88		
Actuated Cycle Length (s)	80.0	Sum of lost time (s)	8.0
Intersection Capacity Utilization	89.5%	ICU Level of Service	E
Analysis Period (min)	15		

c Critical Lane Group

Movement	EBL	EBT	EBR	WBL	WBT	WBR	NBL	NBT	NBR	SBL	SBT	SBR
Lane Configurations												
Ideal Flow (vphpl)	1900	1900	1900	1900	1900	1900	1900	1900	1900	1900	1900	1900
Total Lost time (s)		4.0			4.0			4.0			4.0	
Lane Util. Factor		0.91			0.91			0.95			0.95	
Frpb, ped/bikes		1.00			1.00			0.99			1.00	
Flpb, ped/bikes		1.00			1.00			1.00			1.00	
Frt		0.99			0.99			0.97			0.98	
Flt Protected		1.00			1.00			0.99			0.99	
Satd. Flow (prot)		5022			4988			3403			3432	
Flt Permitted		0.77			0.80			0.69			0.81	
Satd. Flow (perm)		3856			4021			2375			2794	
Volume (vph)	64	1029	60	68	1267	146	40	174	44	107	462	74
Peak-hour factor, PHF	0.95	0.95	0.95	0.95	0.95	0.95	0.95	0.95	0.95	0.95	0.95	0.95
Adj. Flow (vph)	67	1083	63	72	1334	154	42	183	46	113	486	78
RTOR Reduction (vph)	0	7	0	0	17	0	0	22	0	0	13	0
Lane Group Flow (vph)	0	1206	0	0	1543	0	0	249	0	0	664	0
Confl. Peds. (#/hr)	17		19	19		17	12		16	16		12
Turn Type	Perm			Perm			Perm			Perm		
Protected Phases		4			8			2			6	
Permitted Phases	4			8			2			6		
Actuated Green, G (s)		50.0			50.0			19.0			19.0	
Effective Green, g (s)		51.5			51.5			20.5			20.5	
Actuated g/C Ratio		0.64			0.64			0.26			0.26	
Clearance Time (s)		5.5			5.5			5.5			5.5	
Lane Grp Cap (vph)		2482			2589			609			716	
v/s Ratio Prot												
v/s Ratio Perm		0.31			c0.38			0.11			c0.24	
v/c Ratio		0.49			0.60			0.41			0.93	
Uniform Delay, d1		7.4			8.2			24.7			29.0	
Progression Factor		0.66			1.00			1.00			0.47	
Incremental Delay, d2		0.5			1.0			2.0			19.2	
Delay (s)		5.4			9.3			26.8			32.9	
Level of Service		A			A			C			C	
Approach Delay (s)		5.4			9.3			26.8			32.9	
Approach LOS		A			A			C			C	

Intersection Summary			
HCM Average Control Delay	13.6	HCM Level of Service	B
HCM Volume to Capacity ratio	0.69		
Actuated Cycle Length (s)	80.0	Sum of lost time (s)	8.0
Intersection Capacity Utilization	121.5%	ICU Level of Service	H
Analysis Period (min)	15		
c Critical Lane Group			

Movement	EBL	EBT	EBR	WBL	WBT	WBR	NBL	NBT	NBR	SBL	SBT	SBR
Lane Configurations												
Ideal Flow (vphpl)	1900	1900	1900	1900	1900	1900	1900	1900	1900	1900	1900	1900
Total Lost time (s)		4.0			4.0			4.0			4.0	
Lane Util. Factor		0.91			0.91			1.00			1.00	
Frpb, ped/bikes		1.00			0.98			1.00			0.94	
Flpb, ped/bikes		1.00			1.00			1.00			1.00	
Frt		1.00			0.99			0.93			0.92	
Flt Protected		1.00			1.00			0.98			0.98	
Satd. Flow (prot)		5073			4942			1695			1589	
Flt Permitted		0.86			0.93			0.90			0.86	
Satd. Flow (perm)		4356			4585			1560			1395	
Volume (vph)	31	1259	10	10	1408	100	10	0	10	54	0	73
Peak-hour factor, PHF	0.95	0.95	0.95	0.95	0.95	0.95	0.95	0.95	0.95	0.95	0.95	0.95
Adj. Flow (vph)	33	1325	11	11	1482	105	11	0	11	57	0	77
RTOR Reduction (vph)	0	0	0	0	0	0	0	9	0	0	0	0
Lane Group Flow (vph)	0	1369	0	0	1598	0	0	13	0	0	134	0
Confl. Peds. (#/hr)						98						98
Turn Type	Perm			Perm			Perm			Perm		
Protected Phases		4			8			2			6	
Permitted Phases	4			8			2			6		
Actuated Green, G (s)		63.9			63.9			13.1			13.1	
Effective Green, g (s)		63.9			63.9			13.1			13.1	
Actuated g/C Ratio		0.75			0.75			0.15			0.15	
Clearance Time (s)		4.0			4.0			4.0			4.0	
Vehicle Extension (s)		3.0			3.0			3.0			3.0	
Lane Grp Cap (vph)		3275			3447			240			215	
v/s Ratio Prot												
v/s Ratio Perm		0.31			c0.35			0.01			c0.10	
v/c Ratio		0.42			0.46			0.05			0.62	
Uniform Delay, d1		3.8			4.0			30.7			33.6	
Progression Factor		1.00			1.40			1.00			0.87	
Incremental Delay, d2		0.4			0.1			0.1			4.0	
Delay (s)		4.2			5.7			30.8			33.1	
Level of Service		A			A			C			C	
Approach Delay (s)		4.2			5.7			30.8			33.1	
Approach LOS		A			A			C			C	

Intersection Summary			
HCM Average Control Delay	6.4	HCM Level of Service	A
HCM Volume to Capacity ratio	0.49		
Actuated Cycle Length (s)	85.0	Sum of lost time (s)	8.0
Intersection Capacity Utilization	77.2%	ICU Level of Service	D
Analysis Period (min)	15		
c Critical Lane Group			

Movement	EBL	EBT	EBR	WBL	WBT	WBR	NBL	NBT	NBR	SBL	SBT	SBR
Lane Configurations												
Ideal Flow (vphpl)	1900	1900	1900	1900	1900	1900	1900	1900	1900	1900	1900	1900
Total Lost time (s)		4.0			4.0		4.0	4.0		4.0	4.0	
Lane Util. Factor		0.91			0.91		1.00	0.95		1.00	0.95	
Frpb, ped/bikes		1.00			0.99		1.00	0.99		1.00	0.99	
Flpb, ped/bikes		1.00			1.00		1.00	1.00		0.99	1.00	
Frt		0.98			0.98		1.00	0.97		1.00	0.97	
Flt Protected		0.99			0.99		0.95	1.00		0.95	1.00	
Satd. Flow (prot)		4933			4924		1770	3408		1744	3424	
Flt Permitted		0.64			0.64		0.13	1.00		0.39	1.00	
Satd. Flow (perm)		3170			3174		244	3408		722	3424	
Volume (vph)	148	988	187	200	1146	191	120	376	90	365	1144	242
Peak-hour factor, PHF	0.95	0.95	0.95	0.95	0.95	0.95	0.95	0.95	0.95	0.95	0.95	0.95
Adj. Flow (vph)	156	1040	197	211	1206	201	126	396	95	384	1204	255
RTOR Reduction (vph)	0	23	0	0	24	0	0	23	0	0	20	0
Lane Group Flow (vph)	0	1370	0	0	1594	0	126	468	0	384	1439	0
Confl. Peds. (#/hr)	40		9			40	25		31	31		25
Turn Type	Perm			pm+pt			Perm			Perm		
Protected Phases		4		3	8			2			6	
Permitted Phases	4			8			2			6		
Actuated Green, G (s)		45.0			45.0		29.5	29.5		29.5	29.5	
Effective Green, g (s)		46.5			46.5		30.5	30.5		30.5	30.5	
Actuated g/C Ratio		0.55			0.55		0.36	0.36		0.36	0.36	
Clearance Time (s)		5.5			5.5		5.0	5.0		5.0	5.0	
Vehicle Extension (s)		2.0			2.0		2.0	2.0		2.0	2.0	
Lane Grp Cap (vph)		1734			1736		88	1223		259	1229	
v/s Ratio Prot								0.14			0.42	
v/s Ratio Perm		0.43			c0.50		0.52			c0.53		
v/c Ratio		0.99dl			1.54dl		1.43	0.38		1.48	1.17	
Uniform Delay, d1		15.4			17.5		27.2	20.3		27.2	27.2	
Progression Factor		1.17			1.00		1.27	1.29		0.71	0.70	
Incremental Delay, d2		2.2			8.0		245.4	0.9		229.6	82.7	
Delay (s)		20.1			25.5		280.0	27.0		248.8	101.7	
Level of Service		C			C		F	C		F	F	
Approach Delay (s)		20.1			25.5			78.6			132.4	
Approach LOS		C			C			E			F	

Intersection Summary			
HCM Average Control Delay	66.1	HCM Level of Service	E
HCM Volume to Capacity ratio	1.14		
Actuated Cycle Length (s)	85.0	Sum of lost time (s)	8.0
Intersection Capacity Utilization	117.0%	ICU Level of Service	H
Analysis Period (min)	15		

dl Defacto Left Lane. Recode with 1 though lane as a left lane.
c Critical Lane Group

Movement	EBL	EBT	EBR	WBL	WBT	WBR	NBL	NBT	NBR	SBL	SBT	SBR
Lane Configurations												
Ideal Flow (vphpl)	1900	1900	1900	1900	1900	1900	1900	1900	1900	1900	1900	1900
Total Lost time (s)		4.0			4.0			4.0	4.0		4.0	
Lane Util. Factor		0.91			0.91			1.00	1.00		1.00	
Frpb, ped/bikes		1.00			0.99			1.00	0.88		0.97	
Flpb, ped/bikes		1.00			1.00			0.97	1.00		0.95	
Frt		1.00			0.99			1.00	0.85		0.96	
Flt Protected		1.00			1.00			0.98	1.00		0.98	
Satd. Flow (prot)		5058			5005			1770	1395		1603	
Flt Permitted		0.83			0.82			0.84	1.00		0.81	
Satd. Flow (perm)		4208			4107			1512	1395		1334	
Volume (vph)	40	1410	23	50	1474	90	32	43	30	100	40	60
Peak-hour factor, PHF	0.95	0.95	0.95	0.95	0.95	0.95	0.95	0.95	0.95	0.95	0.95	0.95
Adj. Flow (vph)	42	1484	24	53	1552	95	34	45	32	105	42	63
RTOR Reduction (vph)	0	2	0	0	8	0	0	0	18	0	15	0
Lane Group Flow (vph)	0	1548	0	0	1692	0	0	79	14	0	195	0
Confl. Peds. (#/hr)	100		100	100		100	100		100	100		100
Turn Type	Perm			Perm			Perm		Perm	Perm		
Protected Phases		4			8			2			6	
Permitted Phases	4			8			2		2	6		
Actuated Green, G (s)		48.0			48.0			23.0	23.0		23.0	
Effective Green, g (s)		48.5			48.5			23.5	23.5		23.5	
Actuated g/C Ratio		0.61			0.61			0.29	0.29		0.29	
Clearance Time (s)		4.5			4.5			4.5	4.5		4.5	
Lane Grp Cap (vph)		2551			2490			444	410		392	
v/s Ratio Prot												
v/s Ratio Perm		0.37			c0.41			0.05	0.01		c0.15	
v/c Ratio		0.61			0.68			0.18	0.03		0.50	
Uniform Delay, d1		9.8			10.5			21.1	20.2		23.4	
Progression Factor		1.00			1.00			1.00	1.00		1.00	
Incremental Delay, d2		1.1			1.5			0.9	0.2		4.5	
Delay (s)		10.9			12.1			21.9	20.3		27.8	
Level of Service		B			B			C	C		C	
Approach Delay (s)		10.9			12.1			21.5			27.8	
Approach LOS		B			B			C			C	

Intersection Summary			
HCM Average Control Delay	12.8	HCM Level of Service	B
HCM Volume to Capacity ratio	0.62		
Actuated Cycle Length (s)	80.0	Sum of lost time (s)	8.0
Intersection Capacity Utilization	94.0%	ICU Level of Service	F
Analysis Period (min)	15		

c Critical Lane Group

Movement	EBL	EBT	EBR	WBL	WBT	WBR	NBL	NBT	NBR	SBL	SBT	SBR
Lane Configurations												
Ideal Flow (vphpl)	1900	1900	1900	1900	1900	1900	1900	1900	1900	1900	1900	1900
Total Lost time (s)	4.0	4.0		4.0	4.0		4.0	4.0	4.0	4.0	4.0	4.0
Lane Util. Factor	1.00	0.91		1.00	0.91		1.00	0.95	1.00	1.00	0.95	1.00
Frpb, ped/bikes	1.00	0.99		1.00	0.99		1.00	1.00	0.96	1.00	1.00	0.96
Flpb, ped/bikes	1.00	1.00		1.00	1.00		1.00	1.00	1.00	1.00	1.00	1.00
Frt	1.00	0.98		1.00	0.96		1.00	1.00	0.85	1.00	1.00	0.85
Flt Protected	0.95	1.00		0.95	1.00		0.95	1.00	1.00	0.95	1.00	1.00
Satd. Flow (prot)	1770	4923		1770	4839		1770	3539	1515	1770	3539	1523
Flt Permitted	0.95	1.00		0.95	1.00		0.95	1.00	1.00	0.95	1.00	1.00
Satd. Flow (perm)	1770	4923		1770	4839		1770	3539	1515	1770	3539	1523
Volume (vph)	170	1209	172	210	1144	380	140	421	130	390	1442	250
Peak-hour factor, PHF	0.95	0.95	0.95	0.95	0.95	0.95	0.95	0.95	0.95	0.95	0.95	0.95
Adj. Flow (vph)	179	1273	181	221	1204	400	147	443	137	411	1518	263
RTOR Reduction (vph)	0	15	0	0	50	0	0	0	33	0	0	13
Lane Group Flow (vph)	179	1439	0	221	1554	0	147	443	104	411	1518	250
Confl. Peds. (#/hr)			66			23			38			26
Turn Type	Prot			Prot			Prot		pm+ov	Prot		pm+ov
Protected Phases	7	4		3	8		5	2	3	1	6	7
Permitted Phases									2			6
Actuated Green, G (s)	12.0	32.0		15.0	35.0		11.0	28.0	43.0	29.0	46.0	58.0
Effective Green, g (s)	11.0	33.0		14.0	36.0		10.0	29.0	43.0	28.0	47.0	58.0
Actuated g/C Ratio	0.09	0.28		0.12	0.30		0.08	0.24	0.36	0.23	0.39	0.48
Clearance Time (s)	3.0	5.0		3.0	5.0		3.0	5.0	3.0	3.0	5.0	3.0
Vehicle Extension (s)	2.0	2.0		2.0	2.0		2.0	2.0	2.0	2.0	2.0	2.0
Lane Grp Cap (vph)	162	1354		207	1452		148	855	593	413	1386	736
v/s Ratio Prot	0.10	0.29		c0.12	c0.32		c0.08	0.13	0.02	0.23	c0.43	0.03
v/s Ratio Perm									0.05			0.13
v/c Ratio	1.10	1.06		1.07	1.07		0.99	0.52	0.18	1.00	1.10	0.34
Uniform Delay, d1	54.5	43.5		53.0	42.0		55.0	39.4	26.4	45.9	36.5	19.2
Progression Factor	1.00	1.00		1.00	1.00		1.00	1.00	1.00	1.00	1.00	1.00
Incremental Delay, d2	101.6	43.0		81.6	45.0		71.6	2.2	0.1	42.7	54.6	0.1
Delay (s)	156.1	86.5		134.6	87.0		126.5	41.7	26.4	88.6	91.1	19.3
Level of Service	F	F		F	F		F	D	C	F	F	B
Approach Delay (s)		94.1			92.7			56.0			82.0	
Approach LOS		F			F			E			F	

Intersection Summary			
HCM Average Control Delay	85.2	HCM Level of Service	F
HCM Volume to Capacity ratio	1.09		
Actuated Cycle Length (s)	120.0	Sum of lost time (s)	16.0
Intersection Capacity Utilization	101.5%	ICU Level of Service	G
Analysis Period (min)	15		

c Critical Lane Group

Movement	EBL	EBT	EBR	WBL	WBT	WBR	NBL	NBT	NBR	SBL	SBT	SBR
Lane Configurations												
Ideal Flow (vphpl)	1900	1900	1900	1900	1900	1900	1900	1900	1900	1900	1900	1900
Total Lost time (s)		4.0			4.0		4.0	4.0		4.0	4.0	
Lane Util. Factor		1.00			1.00		1.00	0.95		1.00	0.95	
Frpb, ped/bikes		0.94			0.97		1.00	0.98		1.00	0.99	
Flpb, ped/bikes		0.98			0.96		0.98	1.00		0.94	1.00	
Frt		0.96			0.96		1.00	0.99		1.00	0.99	
Flt Protected		0.98			0.98		0.95	1.00		0.95	1.00	
Satd. Flow (prot)		1608			1632		1734	3430		1658	3472	
Flt Permitted		0.71			0.79		0.17	1.00		0.38	1.00	
Satd. Flow (perm)		1159			1311		302	3430		662	3472	
Volume (vph)	62	50	50	70	80	64	80	591	60	52	1207	72
Peak-hour factor, PHF	0.95	0.95	0.95	0.95	0.95	0.95	0.95	0.95	0.95	0.95	0.95	0.95
Adj. Flow (vph)	65	53	53	74	84	67	84	622	63	55	1271	76
RTOR Reduction (vph)	0	22	0	0	20	0	0	7	0	0	4	0
Lane Group Flow (vph)	0	149	0	0	205	0	84	678	0	55	1343	0
Confl. Peds. (#/hr)	100		100	100		100	100		100	100		100
Turn Type	Perm			Perm			Perm			Perm		
Protected Phases		4			4			2			6	
Permitted Phases	4			4			2			6		
Actuated Green, G (s)		15.9			15.9		62.1	62.1		62.1	62.1	
Effective Green, g (s)		15.4			15.4		61.6	61.6		61.6	61.6	
Actuated g/C Ratio		0.18			0.18		0.72	0.72		0.72	0.72	
Clearance Time (s)		3.5			3.5		3.5	3.5		3.5	3.5	
Vehicle Extension (s)		2.0			2.0		2.0	2.0		2.0	2.0	
Lane Grp Cap (vph)		210			238		219	2486		480	2516	
v/s Ratio Prot								0.20			c0.39	
v/s Ratio Perm		0.13			c0.16		0.28			0.08		
v/c Ratio		0.71			0.86		0.38	0.27		0.11	0.53	
Uniform Delay, d1		32.7			33.7		4.5	4.0		3.5	5.3	
Progression Factor		1.00			1.00		1.00	1.00		0.96	0.90	
Incremental Delay, d2		8.6			24.4		5.0	0.3		0.0	0.1	
Delay (s)		41.3			58.1		9.5	4.3		3.4	4.8	
Level of Service		D			E		A	A		A	A	
Approach Delay (s)		41.3			58.1			4.9			4.7	
Approach LOS		D			E			A			A	

Intersection Summary			
HCM Average Control Delay	11.9	HCM Level of Service	B
HCM Volume to Capacity ratio	0.60		
Actuated Cycle Length (s)	85.0	Sum of lost time (s)	8.0
Intersection Capacity Utilization	70.3%	ICU Level of Service	C
Analysis Period (min)	15		

c Critical Lane Group

Movement	EBL	EBT	EBR	WBL	WBT	WBR	NBL	NBT	NBR	SBL	SBT	SBR
Lane Configurations												
Ideal Flow (vphpl)	1900	1900	1900	1900	1900	1900	1900	1900	1900	1900	1900	1900
Total Lost time (s)	4.0	4.0		4.0	4.0		4.0	4.0		4.0	4.0	
Lane Util. Factor	1.00	0.95		1.00	0.95		1.00	0.95		1.00	0.95	
Frpb, ped/bikes	1.00	0.98		1.00	0.95		1.00	0.99		1.00	0.97	
Flpb, ped/bikes	1.00	1.00		1.00	1.00		1.00	1.00		0.95	1.00	
Frt	1.00	0.98		1.00	0.97		1.00	0.98		1.00	0.97	
Flt Protected	0.95	1.00		0.95	1.00		0.95	1.00		0.95	1.00	
Satd. Flow (prot)	1770	3379		1770	3267		1770	3412		1685	3339	
Flt Permitted	0.95	1.00		0.95	1.00		0.12	1.00		0.44	1.00	
Satd. Flow (perm)	1770	3379		1770	3267		219	3412		786	3339	
Volume (vph)	270	500	100	140	710	199	70	361	60	174	1023	220
Peak-hour factor, PHF	0.95	0.95	0.95	0.95	0.95	0.95	0.95	0.95	0.95	0.95	0.95	0.95
Adj. Flow (vph)	284	526	105	147	747	209	74	380	63	183	1077	232
RTOR Reduction (vph)	0	18	0	0	30	0	0	15	0	0	20	0
Lane Group Flow (vph)	284	613	0	147	926	0	74	428	0	183	1289	0
Confl. Peds. (#/hr)			100			100	100		100	100		100
Turn Type	Prot			Prot			Perm			Perm		
Protected Phases	7	4		3	8			2			6	
Permitted Phases							2			6		
Actuated Green, G (s)	16.5	28.0		11.0	22.5		32.5	32.5		32.5	32.5	
Effective Green, g (s)	17.0	27.5		11.5	22.0		34.0	34.0		34.0	34.0	
Actuated g/C Ratio	0.20	0.32		0.14	0.26		0.40	0.40		0.40	0.40	
Clearance Time (s)	4.5	3.5		4.5	3.5		5.5	5.5		5.5	5.5	
Vehicle Extension (s)	2.0	2.0		2.0	2.0		2.0	2.0		2.0	2.0	
Lane Grp Cap (vph)	354	1093		239	846		88	1365		314	1336	
v/s Ratio Prot	c0.16	0.18		0.08	c0.28			0.13			c0.39	
v/s Ratio Perm							0.34			0.23		
v/c Ratio	0.80	0.56		0.62	1.09		0.84	0.31		0.58	0.96	
Uniform Delay, d1	32.4	23.8		34.7	31.5		23.1	17.5		20.0	24.9	
Progression Factor	1.00	1.00		1.00	1.00		1.00	1.00		1.00	1.00	
Incremental Delay, d2	11.7	0.4		3.3	59.8		59.2	0.6		7.7	17.5	
Delay (s)	44.1	24.2		37.9	91.3		82.2	18.1		27.6	42.4	
Level of Service	D	C		D	F		F	B		C	D	
Approach Delay (s)		30.3			84.2			27.3			40.6	
Approach LOS		C			F			C			D	

Intersection Summary			
HCM Average Control Delay	48.5	HCM Level of Service	D
HCM Volume to Capacity ratio	0.97		
Actuated Cycle Length (s)	85.0	Sum of lost time (s)	12.0
Intersection Capacity Utilization	96.1%	ICU Level of Service	F
Analysis Period (min)	15		

c Critical Lane Group

Movement	EBL	EBR	NBL	NBT	SBT	SBR
Lane Configurations						
Ideal Flow (vphpl)	1900	1900	1900	1900	1900	1900
Total Lost time (s)	4.0		4.0	4.0	4.0	
Lane Util. Factor	1.00		1.00	0.95	0.95	
Frt	0.91		1.00	1.00	0.99	
Flt Protected	0.98		0.95	1.00	1.00	
Satd. Flow (prot)	1670		1770	3539	3514	
Flt Permitted	0.98		0.95	1.00	1.00	
Satd. Flow (perm)	1670		1770	3539	3514	
Volume (vph)	73	136	61	665	1627	79
Peak-hour factor, PHF	0.95	0.95	0.95	0.99	0.99	0.95
Adj. Flow (vph)	77	143	64	672	1643	83
RTOR Reduction (vph)	95	0	0	0	3	0
Lane Group Flow (vph)	125	0	64	672	1723	0
Turn Type			Prot			
Protected Phases	2		3	8	4	
Permitted Phases						
Actuated Green, G (s)	15.9		7.6	61.1	49.5	
Effective Green, g (s)	15.9		7.6	61.1	49.5	
Actuated g/C Ratio	0.19		0.09	0.72	0.58	
Clearance Time (s)	4.0		4.0	4.0	4.0	
Vehicle Extension (s)	3.0		3.0	3.0	3.0	
Lane Grp Cap (vph)	312		158	2544	2046	
v/s Ratio Prot	c0.07		c0.04	0.19	c0.49	
v/s Ratio Perm						
v/c Ratio	0.40		0.41	0.26	0.84	
Uniform Delay, d1	30.4		36.6	4.1	14.5	
Progression Factor	1.00		1.03	1.14	1.63	
Incremental Delay, d2	0.8		1.4	0.2	0.4	
Delay (s)	31.2		39.0	5.0	24.1	
Level of Service	C		D	A	C	
Approach Delay (s)	31.2			7.9	24.1	
Approach LOS	C			A	C	

Intersection Summary			
HCM Average Control Delay	20.2	HCM Level of Service	C
HCM Volume to Capacity ratio	0.70		
Actuated Cycle Length (s)	85.0	Sum of lost time (s)	12.0
Intersection Capacity Utilization	69.8%	ICU Level of Service	C
Analysis Period (min)	15		

c Critical Lane Group

HCM Signalized Intersection Capacity Analysis
1: 52nd St. & Shattuck Ave.

2030 PM + Tower
1/21/2008

Movement	EBL	EBT	EBR	WBL	WBT	WBR	NBL	NBT	NBR	SBL	SBT	SBR
Lane Configurations												
Ideal Flow (vphpl)	1900	1900	1900	1900	1900	1900	1900	1900	1900	1900	1900	1900
Lane Width	12	12	12	12	12	12	16	16	16	16	16	16
Total Lost time (s)	4.0	4.0		4.0	4.0		2.0	2.0		2.0	2.0	
Lane Util. Factor	1.00	0.91		1.00	0.91		1.00	1.00		1.00	1.00	
Frpb, ped/bikes	1.00	0.99		1.00	1.00		1.00	0.98		1.00	0.98	
Flpb, ped/bikes	1.00	1.00		1.00	1.00		1.00	1.00		0.98	1.00	
Frt	1.00	0.98		1.00	0.98		1.00	0.96		1.00	0.93	
Flt Protected	0.95	1.00		0.95	1.00		0.95	1.00		0.95	1.00	
Satd. Flow (prot)	1770	4924		1770	4960		2006	1990		1960	1918	
Flt Permitted	0.95	1.00		0.95	1.00		0.12	1.00		0.54	1.00	
Satd. Flow (perm)	1770	4924		1770	4960		257	1990		1109	1918	
Volume (vph)	350	1303	193	120	1070	170	200	258	100	160	291	280
Peak-hour factor, PHF	0.95	0.95	0.95	0.95	0.95	0.95	0.95	0.95	0.95	0.95	0.95	0.95
Adj. Flow (vph)	368	1372	203	126	1126	179	211	272	105	168	306	295
RTOR Reduction (vph)	0	19	0	0	21	0	0	14	0	0	35	0
Lane Group Flow (vph)	368	1556	0	126	1284	0	211	363	0	168	566	0
Confl. Peds. (#/hr)			32	32		4	12		24	24		12
Parking (#/hr)												0
Turn Type	Prot			Prot			pm+pt			Perm		
Protected Phases	7	4		3	8		5	2			6	
Permitted Phases							2			6		
Actuated Green, G (s)	20.0	36.6		9.6	26.2		43.3	43.3		30.3	30.3	
Effective Green, g (s)	20.0	36.6		9.6	26.2		43.8	43.8		30.8	30.8	
Actuated g/C Ratio	0.20	0.37		0.10	0.26		0.44	0.44		0.31	0.31	
Clearance Time (s)	4.0	4.0		4.0	4.0		4.0	2.5		2.5	2.5	
Vehicle Extension (s)	3.0	3.0		3.0	3.0		3.0	3.0		3.0	3.0	
Lane Grp Cap (vph)	354	1802		170	1300		305	872		342	591	
v/s Ratio Prot	c0.21	0.32		0.07	c0.26		c0.08	0.18			c0.29	
v/s Ratio Perm							0.23			0.15		
v/c Ratio	1.04	0.86		0.74	0.99		0.69	0.42		0.49	0.96	
Uniform Delay, d1	40.0	29.4		44.0	36.7		44.3	19.3		28.2	34.0	
Progression Factor	1.00	1.00		1.00	1.00		1.00	1.00		1.00	1.00	
Incremental Delay, d2	58.5	5.8		15.9	22.1		6.6	0.3		1.1	26.4	
Delay (s)	98.5	35.2		59.9	58.9		50.9	19.6		29.3	60.4	
Level of Service	F	D		E	E		D	B		C	E	
Approach Delay (s)		47.2			59.0			30.9			53.6	
Approach LOS		D			E			C			D	

Intersection Summary			
HCM Average Control Delay	49.7	HCM Level of Service	D
HCM Volume to Capacity ratio	0.94		
Actuated Cycle Length (s)	100.0	Sum of lost time (s)	12.0
Intersection Capacity Utilization	101.4%	ICU Level of Service	G
Analysis Period (min)	15		

c Critical Lane Group

HCM Signalized Intersection Capacity Analysis
2: 52nd St. & Telegraph Ave.

2030 PM + Tower
1/21/2008

Movement	EBL	EBT	EBR	WBL	WBT	WBR	NBL	NBT	NBR	SBL	SBT	SBR
Lane Configurations												
Ideal Flow (vphpl)	1900	1900	1900	1900	1900	1900	1900	1900	1900	1900	1900	1900
Total Lost time (s)		4.0		4.0	4.0			4.0		4.0	4.0	
Lane Util. Factor		1.00		0.95	0.95			0.95		1.00	0.95	
Frpb, ped/bikes		1.00		1.00	0.97			0.98		1.00	0.95	
Flpb, ped/bikes		0.99		1.00	1.00			1.00		1.00	1.00	
Frt		0.93		1.00	0.93			0.95		1.00	0.95	
Flt Protected		0.99		0.95	1.00			1.00		0.95	1.00	
Satd. Flow (prot)		1705		1681	1586			3275		1770	3209	
Flt Permitted		0.36		0.73	1.00			0.94		0.95	1.00	
Satd. Flow (perm)		619		1290	1586			3087		1770	3209	
Volume (vph)	10	10	20	127	120	120	10	1114	615	200	901	420
Peak-hour factor, PHF	0.95	0.95	0.95	0.95	0.95	0.95	0.95	0.95	0.95	0.95	0.95	0.95
Adj. Flow (vph)	11	11	21	134	126	126	11	1173	647	211	948	442
RTOR Reduction (vph)	0	20	0	0	39	0	0	64	0	0	45	0
Lane Group Flow (vph)	0	23	0	134	213	0	0	1767	0	211	1345	0
Confl. Peds. (#/hr)	36					36	48		16	16		48
Turn Type	Perm			Perm			Perm			Prot		
Protected Phases		7			8			2		1	6	
Permitted Phases	7			8			2					
Actuated Green, G (s)		6.5		16.7	16.7			45.7		13.1	63.3	
Effective Green, g (s)		7.0		17.2	17.2			46.2		13.6	63.8	
Actuated g/C Ratio		0.07		0.17	0.17			0.46		0.14	0.64	
Clearance Time (s)		4.5		4.5	4.5			4.5		4.5	4.5	
Vehicle Extension (s)		2.0		2.0	2.0			2.0		2.0	2.0	
Lane Grp Cap (vph)		43		222	273			1426		241	2047	
v/s Ratio Prot										c0.12	0.42	
v/s Ratio Perm		c0.04		0.10	0.13			c0.57				
v/c Ratio		0.55		0.60	0.78			1.24		0.88	0.66	
Uniform Delay, d1		45.0		38.3	39.6			26.9		42.4	11.3	
Progression Factor		1.00		1.00	1.00			0.62		1.00	1.00	
Incremental Delay, d2		7.4		3.2	12.5			108.2		27.1	1.7	
Delay (s)		52.3		41.4	52.1			124.8		69.5	12.9	
Level of Service		D		D	D			F		E	B	
Approach Delay (s)		52.3			48.4			124.8			20.4	
Approach LOS		D			D			F			C	

Intersection Summary			
HCM Average Control Delay	73.0	HCM Level of Service	E
HCM Volume to Capacity ratio	1.03		
Actuated Cycle Length (s)	100.0	Sum of lost time (s)	16.0
Intersection Capacity Utilization	118.2%	ICU Level of Service	H
Analysis Period (min)	15		

c Critical Lane Group

Movement	EBL	EBT	EBR	WBL	WBT	WBR	NBL	NBT	NBR	SBL	SBT	SBR
Lane Configurations												
Ideal Flow (vphpl)	1900	1900	1900	1900	1900	1900	1900	1900	1900	1900	1900	1900
Total Lost time (s)	4.0	4.0		4.0	4.0		4.0	4.0		4.0	4.0	
Lane Util. Factor	0.97	0.95		1.00	0.95		1.00	0.95		1.00	0.95	
Frpb, ped/bikes	1.00	0.98		1.00	0.99		1.00	0.97		1.00	0.98	
Flpb, ped/bikes	1.00	1.00		1.00	1.00		1.00	1.00		1.00	1.00	
Frt	1.00	0.98		1.00	0.94		1.00	0.96		1.00	0.99	
Flt Protected	0.95	1.00		0.95	1.00		0.95	1.00		0.95	1.00	
Satd. Flow (prot)	3433	3418		1770	3299		1770	3280		1770	3416	
Flt Permitted	0.95	1.00		0.95	1.00		0.95	1.00		0.95	1.00	
Satd. Flow (perm)	3433	3418		1770	3299		1770	3280		1770	3416	
Volume (vph)	460	930	133	160	580	350	100	949	350	300	698	60
Peak-hour factor, PHF	0.95	0.95	0.95	0.95	0.95	0.95	0.95	0.95	0.95	0.95	0.95	0.95
Adj. Flow (vph)	484	979	140	168	611	368	105	999	368	316	735	63
RTOR Reduction (vph)	0	11	0	0	90	0	0	38	0	0	7	0
Lane Group Flow (vph)	484	1108	0	168	889	0	105	1329	0	316	791	0
Confl. Peds. (#/hr)	15		48	48		15	123		48	48		123
Turn Type	Prot			Prot			Prot			Prot		
Protected Phases	7	4		3	8		5	2		1	6	
Permitted Phases												
Actuated Green, G (s)	15.7	27.5		10.9	22.7		5.0	32.6		12.0	39.6	
Effective Green, g (s)	15.2	28.5		10.4	23.7		4.5	33.6		11.5	40.6	
Actuated g/C Ratio	0.15	0.28		0.10	0.24		0.04	0.34		0.12	0.41	
Clearance Time (s)	3.5	5.0		3.5	5.0		3.5	5.0		3.5	5.0	
Vehicle Extension (s)	2.0	2.0		2.0	2.0		2.0	2.0		2.0	2.0	
Lane Grp Cap (vph)	522	974		184	782		80	1102		204	1387	
v/s Ratio Prot	c0.14	c0.32		0.09	0.27		0.06	c0.41		c0.18	0.23	
v/s Ratio Perm												
v/c Ratio	0.93	1.14		0.91	1.14		1.31	1.21		1.55	0.57	
Uniform Delay, d1	41.9	35.8		44.4	38.1		47.8	33.2		44.2	23.0	
Progression Factor	1.00	1.00		1.00	1.00		1.00	1.00		1.19	0.77	
Incremental Delay, d2	22.3	74.4		41.7	76.9		205.3	101.5		264.7	1.3	
Delay (s)	64.2	110.2		86.0	115.0		253.1	134.7		317.6	18.9	
Level of Service	E	F		F	F		F	F		F	B	
Approach Delay (s)		96.3			110.8			143.1			103.6	
Approach LOS		F			F			F			F	

Intersection Summary			
HCM Average Control Delay	113.9	HCM Level of Service	F
HCM Volume to Capacity ratio	1.16		
Actuated Cycle Length (s)	100.0	Sum of lost time (s)	12.0
Intersection Capacity Utilization	109.3%	ICU Level of Service	H
Analysis Period (min)	15		

c Critical Lane Group

Movement	EBL	EBT	EBR	WBL	WBT	WBR	NBL	NBT	NBR	SBL	SBT	SBR
Lane Configurations												
Ideal Flow (vphpl)	1900	1900	1900	1900	1900	1900	1900	1900	1900	1900	1900	1900
Total Lost time (s)		4.0						4.0		4.0	4.0	
Lane Util. Factor		1.00						0.95		0.97	0.95	
Frt		0.86						0.94		1.00	0.98	
Flt Protected		1.00						1.00		0.95	1.00	
Satd. Flow (prot)		1611						3335		3433	3463	
Flt Permitted		1.00						0.95		0.95	1.00	
Satd. Flow (perm)		1611						3164		3433	3463	
Volume (vph)	0	0	10	0	0	0	10	555	349	1550	357	60
Peak-hour factor, PHF	0.95	0.95	0.95	0.95	0.95	0.95	0.95	0.95	0.95	0.95	0.95	0.95
Adj. Flow (vph)	0	0	11	0	0	0	11	584	367	1632	376	63
RTOR Reduction (vph)	0	11	0	0	0	0	0	18	0	0	0	0
Lane Group Flow (vph)	0	0	0	0	0	0	0	944	0	1632	439	0
Turn Type							Perm			Prot		
Protected Phases								2		1	6	
Permitted Phases							2					
Actuated Green, G (s)		0.0						13.0		29.0	50.0	
Effective Green, g (s)		0.0						13.0		29.0	50.0	
Actuated g/C Ratio		0.00						0.26		0.58	1.00	
Clearance Time (s)								4.0		4.0	2.0	
Lane Grp Cap (vph)		0						823		1991	3463	
v/s Ratio Prot										c0.48	0.13	
v/s Ratio Perm								c0.30				
v/c Ratio		0.00						1.15		0.82	0.13	
Uniform Delay, d1		25.0						18.5		8.4	0.0	
Progression Factor		1.00						0.71		1.00	1.00	
Incremental Delay, d2		0.0						78.7		3.9	0.1	
Delay (s)		25.0						91.8		12.3	0.1	
Level of Service		C						F		B	A	
Approach Delay (s)		25.0			0.0			91.8			9.7	
Approach LOS		C			A			F			A	

Intersection Summary			
HCM Average Control Delay	35.7	HCM Level of Service	D
HCM Volume to Capacity ratio	0.92		
Actuated Cycle Length (s)	50.0	Sum of lost time (s)	8.0
Intersection Capacity Utilization	84.4%	ICU Level of Service	E
Analysis Period (min)	15		

c Critical Lane Group

Movement	EBL	EBT	EBR	WBL	WBT	WBR	NBL	NBT	NBR	SBL	SBT	SBR
Lane Configurations												
Ideal Flow (vphpl)	1900	1900	1900	1900	1900	1900	1900	1900	1900	1900	1900	1900
Total Lost time (s)		4.0			4.0			4.0			4.0	
Lane Util. Factor		1.00			1.00			0.95			0.95	
Frpb, ped/bikes		0.96			0.97			0.99			0.99	
Flpb, ped/bikes		0.99			0.97			1.00			1.00	
Frt		0.97			0.96			0.98			0.99	
Flt Protected		0.99			0.99			1.00			0.99	
Satd. Flow (prot)		1694			1668			3422			3428	
Flt Permitted		0.87			0.90			0.92			0.78	
Satd. Flow (perm)		1501			1515			3161			2694	
Volume (vph)	40	70	31	70	140	90	41	724	90	60	307	30
Peak-hour factor, PHF	0.95	0.95	0.95	0.95	0.95	0.95	0.95	0.95	0.95	0.95	0.95	0.95
Adj. Flow (vph)	42	74	33	74	147	95	43	762	95	63	323	32
RTOR Reduction (vph)	0	20	0	0	31	0	0	18	0	0	13	0
Lane Group Flow (vph)	0	129	0	0	285	0	0	882	0	0	406	0
Confl. Peds. (#/hr)	100		100	100		100	100		100	100		100
Turn Type	Perm			Perm			Perm			Perm		
Protected Phases		4			8			2			6	
Permitted Phases	4			8			2			6		
Actuated Green, G (s)		17.0			17.0			25.0			25.0	
Effective Green, g (s)		17.0			17.0			25.0			25.0	
Actuated g/C Ratio		0.34			0.34			0.50			0.50	
Clearance Time (s)		4.0			4.0			4.0			4.0	
Lane Grp Cap (vph)		510			515			1581			1347	
v/s Ratio Prot												
v/s Ratio Perm		0.09			c0.19			c0.28			0.15	
v/c Ratio		0.25			0.55			0.56			0.30	
Uniform Delay, d1		11.9			13.4			8.7			7.4	
Progression Factor		1.00			1.00			1.00			1.00	
Incremental Delay, d2		1.2			4.2			1.4			0.6	
Delay (s)		13.1			17.7			10.1			7.9	
Level of Service		B			B			B			A	
Approach Delay (s)		13.1			17.7			10.1			7.9	
Approach LOS		B			B			B			A	

Intersection Summary			
HCM Average Control Delay	11.2	HCM Level of Service	B
HCM Volume to Capacity ratio	0.56		
Actuated Cycle Length (s)	50.0	Sum of lost time (s)	8.0
Intersection Capacity Utilization	78.2%	ICU Level of Service	D
Analysis Period (min)	15		
c Critical Lane Group			

Movement	EBL	EBT	EBR	WBL	WBT	WBR	NBL	NBT	NBR	SBL	SBT	SBR
Lane Configurations												
Ideal Flow (vphpl)	1900	1900	1900	1900	1900	1900	1900	1900	1900	1900	1900	1900
Total Lost time (s)		4.0			4.0			4.0			4.0	
Lane Util. Factor		1.00			1.00			0.95			0.91	
Frpb, ped/bikes		0.96			0.96			0.99			0.98	
Flpb, ped/bikes		0.97			0.99			1.00			1.00	
Frt		0.96			0.96			0.99			0.99	
Flt Protected		0.98			0.99			1.00			1.00	
Satd. Flow (prot)		1623			1667			3454			4911	
Flt Permitted		0.74			0.88			0.76			0.79	
Satd. Flow (perm)		1227			1483			2640			3909	
Volume (vph)	80	70	70	32	80	50	90	1667	82	40	1104	90
Peak-hour factor, PHF	0.95	0.95	0.95	0.95	0.95	0.95	0.95	0.95	0.95	0.95	0.95	0.95
Adj. Flow (vph)	84	74	74	34	84	53	95	1755	86	42	1162	95
RTOR Reduction (vph)	0	18	0	0	2	0	0	2	0	0	6	0
Lane Group Flow (vph)	0	214	0	0	169	0	0	1934	0	0	1293	0
Confl. Peds. (#/hr)	100		100	100		100	100		100	100		100
Turn Type	Perm			Perm			Perm			Perm		
Protected Phases		4			4			2			6	
Permitted Phases	4			4			2			6		
Actuated Green, G (s)		15.4			15.4			55.6			55.6	
Effective Green, g (s)		15.9			15.9			56.1			56.1	
Actuated g/C Ratio		0.20			0.20			0.70			0.70	
Clearance Time (s)		4.5			4.5			4.5			4.5	
Vehicle Extension (s)		2.0			2.0			2.0			2.0	
Lane Grp Cap (vph)		244			295			1851			2741	
v/s Ratio Prot												
v/s Ratio Perm		c0.17			0.11			c0.73			0.33	
v/c Ratio		0.88			0.57			1.04			0.47	
Uniform Delay, d1		31.1			29.0			11.9			5.3	
Progression Factor		1.00			1.00			1.00			1.00	
Incremental Delay, d2		27.3			1.7			33.7			0.6	
Delay (s)		58.4			30.6			45.6			5.9	
Level of Service		E			C			D			A	
Approach Delay (s)		58.4			30.6			45.6			5.9	
Approach LOS		E			C			D			A	

Intersection Summary			
HCM Average Control Delay	31.6	HCM Level of Service	C
HCM Volume to Capacity ratio	1.01		
Actuated Cycle Length (s)	80.0	Sum of lost time (s)	8.0
Intersection Capacity Utilization	113.9%	ICU Level of Service	H
Analysis Period (min)	15		
c Critical Lane Group			

Movement	EBL	EBT	EBR	WBL	WBT	WBR	NBL	NBT	NBR	SBL	SBT	SBR
Lane Configurations												
Ideal Flow (vphpl)	1900	1900	1900	1900	1900	1900	1900	1900	1900	1900	1900	1900
Total Lost time (s)	4.0	4.0		4.0	4.0		4.0	4.0		4.0	4.0	
Lane Util. Factor	1.00	0.95		1.00	0.95		1.00	1.00		1.00	1.00	
Frpb, ped/bikes	1.00	1.00		1.00	1.00		1.00	1.00		1.00	1.00	
Flpb, ped/bikes	1.00	1.00		1.00	1.00		0.98	1.00		1.00	1.00	
Frt	1.00	0.98		1.00	0.98		1.00	0.98		1.00	0.98	
Flt Protected	0.95	1.00		0.95	1.00		0.95	1.00		0.95	1.00	
Satd. Flow (prot)	1765	3464		1768	3455		1741	1830		1766	1825	
Flt Permitted	0.12	1.00		0.12	1.00		0.52	1.00		0.22	1.00	
Satd. Flow (perm)	232	3464		233	3455		960	1830		402	1825	
Volume (vph)	90	1119	160	83	894	133	180	561	65	106	250	30
Peak-hour factor, PHF	0.95	0.95	0.95	0.95	0.95	0.95	0.95	0.95	0.95	0.95	0.95	0.95
Adj. Flow (vph)	95	1178	168	87	941	140	189	591	68	112	263	32
RTOR Reduction (vph)	0	14	0	0	14	0	0	5	0	0	6	0
Lane Group Flow (vph)	95	1332	0	87	1067	0	189	654	0	112	290	0
Confl. Peds. (#/hr)	12		12	12		12	42		12	12		42
Turn Type	Perm			Perm			Perm			Perm		
Protected Phases		4			8			2			6	
Permitted Phases	4			8			2			6		
Actuated Green, G (s)	33.0	33.0		33.0	33.0		40.5	40.5		40.5	40.5	
Effective Green, g (s)	32.0	32.0		32.0	32.0		40.0	40.0		40.0	40.0	
Actuated g/C Ratio	0.40	0.40		0.40	0.40		0.50	0.50		0.50	0.50	
Clearance Time (s)	3.0	3.0		3.0	3.0		3.5	3.5		3.5	3.5	
Lane Grp Cap (vph)	93	1386		93	1382		480	915		201	913	
v/s Ratio Prot		0.38			0.31			c0.36			0.16	
v/s Ratio Perm	c0.41			0.37			0.20			0.28		
v/c Ratio	1.02	0.96		0.94	0.77		0.39	0.71		0.56	0.32	
Uniform Delay, d1	24.0	23.4		23.0	20.8		12.5	15.6		13.9	11.9	
Progression Factor	1.00	1.00		1.71	1.79		1.64	1.63		1.00	1.00	
Incremental Delay, d2	99.3	16.5		45.0	1.8		0.2	0.4		10.7	0.9	
Delay (s)	123.3	39.9		84.4	39.1		20.6	25.8		24.6	12.8	
Level of Service	F	D		F	D		C	C		C	B	
Approach Delay (s)		45.4			42.5			24.7			16.0	
Approach LOS		D			D			C			B	

Intersection Summary			
HCM Average Control Delay	36.9	HCM Level of Service	D
HCM Volume to Capacity ratio	0.85		
Actuated Cycle Length (s)	80.0	Sum of lost time (s)	8.0
Intersection Capacity Utilization	96.6%	ICU Level of Service	F
Analysis Period (min)	15		
c Critical Lane Group			

Movement	EBL	EBT	EBR	WBL	WBT	WBR	NBL	NBT	NBR	SBL	SBT	SBR
Lane Configurations												
Ideal Flow (vphpl)	1900	1900	1900	1900	1900	1900	1900	1900	1900	1900	1900	1900
Total Lost time (s)	4.0	4.0		4.0	4.0			4.0			4.0	
Lane Util. Factor	1.00	0.95		1.00	0.95			0.95			0.95	
Frpb, ped/bikes	1.00	0.99		1.00	1.00			1.00			1.00	
Flpb, ped/bikes	1.00	1.00		1.00	1.00			1.00			1.00	
Frt	1.00	0.99		1.00	0.99			0.98			0.97	
Flt Protected	0.95	1.00		0.95	1.00			0.99			0.99	
Satd. Flow (prot)	1765	3458		1770	3500			3433			3394	
Flt Permitted	0.16	1.00		0.16	1.00			0.84			0.87	
Satd. Flow (perm)	297	3458		298	3500			2912			2962	
Volume (vph)	60	1161	120	70	1020	63	90	331	59	33	160	50
Peak-hour factor, PHF	0.99	0.99	0.99	0.99	0.99	0.99	0.99	0.99	0.99	0.99	0.99	0.99
Adj. Flow (vph)	61	1173	121	71	1030	64	91	334	60	33	162	51
RTOR Reduction (vph)	0	10	0	0	6	0	0	1	0	0	4	0
Lane Group Flow (vph)	61	1284	0	71	1089	0	0	484	0	0	242	0
Confl. Peds. (#/hr)	24		78	78		24	8		6	6		8
Turn Type	Perm			Perm			Perm			Perm		
Protected Phases		4			8			2			6	
Permitted Phases	4			8			2			6		
Actuated Green, G (s)	24.0	24.0		24.0	24.0			46.0			46.0	
Effective Green, g (s)	25.0	25.0		25.0	25.0			47.0			47.0	
Actuated g/C Ratio	0.31	0.31		0.31	0.31			0.59			0.59	
Clearance Time (s)	5.0	5.0		5.0	5.0			5.0			5.0	
Lane Grp Cap (vph)	93	1081		93	1094			1711			1740	
v/s Ratio Prot		c0.37			0.31							
v/s Ratio Perm	0.21			0.24				c0.17			0.08	
v/c Ratio	0.66	1.19		0.76	0.99			0.28			0.14	
Uniform Delay, d1	23.8	27.5		24.8	27.4			8.2			7.4	
Progression Factor	0.64	0.57		0.79	0.83			1.06			1.00	
Incremental Delay, d2	13.1	88.5		27.8	19.2			0.2			0.2	
Delay (s)	28.4	104.3		47.5	41.9			8.9			7.6	
Level of Service	C	F		D	D			A			A	
Approach Delay (s)		100.9			42.3			8.9			7.6	
Approach LOS		F			D			A			A	

Intersection Summary			
HCM Average Control Delay	59.1	HCM Level of Service	E
HCM Volume to Capacity ratio	0.60		
Actuated Cycle Length (s)	80.0	Sum of lost time (s)	8.0
Intersection Capacity Utilization	80.7%	ICU Level of Service	D
Analysis Period (min)	15		
c Critical Lane Group			

Movement	EBL	EBT	EBR	WBL	WBT	WBR	NBL	NBT	NBR	SBL	SBT	SBR
Lane Configurations												
Ideal Flow (vphpl)	1900	1900	1900	1900	1900	1900	1900	1900	1900	1900	1900	1900
Total Lost time (s)	4.0	4.0		4.0	4.0			4.0			4.0	
Lane Util. Factor	1.00	0.95		1.00	0.95			0.95			0.95	
Frpb, ped/bikes	1.00	1.00		1.00	1.00			1.00			1.00	
Flpb, ped/bikes	1.00	1.00		1.00	1.00			1.00			1.00	
Frt	1.00	0.99		1.00	0.98			0.97			0.98	
Flt Protected	0.95	1.00		0.95	1.00			0.99			0.99	
Satd. Flow (prot)	1768	3493		1764	3451			3415			3419	
Flt Permitted	0.11	1.00		0.11	1.00			0.86			0.66	
Satd. Flow (perm)	213	3493		212	3451			2946			2293	
Volume (vph)	90	1118	84	115	1058	172	75	543	126	92	256	60
Peak-hour factor, PHF	0.95	0.95	0.95	0.95	0.95	0.95	0.95	0.95	0.95	0.95	0.95	0.95
Adj. Flow (vph)	95	1177	88	121	1114	181	79	572	133	97	269	63
RTOR Reduction (vph)	0	7	0	0	16	0	0	12	0	0	17	0
Lane Group Flow (vph)	95	1258	0	121	1279	0	0	772	0	0	412	0
Confl. Peds. (#/hr)	8		39	39		8			25	25		
Turn Type	Perm			Perm			Perm			Perm		
Protected Phases		4			8			2			6	
Permitted Phases	4			8			2			6		
Actuated Green, G (s)	35.5	35.5		35.5	35.5			38.0			38.0	
Effective Green, g (s)	35.0	35.0		35.0	35.0			37.0			37.0	
Actuated g/C Ratio	0.44	0.44		0.44	0.44			0.46			0.46	
Clearance Time (s)	3.5	3.5		3.5	3.5			3.0			3.0	
Lane Grp Cap (vph)	93	1528		93	1510			1363			1061	
v/s Ratio Prot		0.36			0.37							
v/s Ratio Perm	0.45			c0.57				c0.26			0.18	
v/c Ratio	1.02	0.82		1.30	0.85			0.57			0.39	
Uniform Delay, d1	22.5	19.8		22.5	20.1			15.7			14.1	
Progression Factor	1.03	1.04		1.29	1.32			1.43			1.00	
Incremental Delay, d2	33.5	0.5		189.7	5.5			1.5			1.1	
Delay (s)	56.8	21.1		218.7	32.1			23.8			15.2	
Level of Service	E	C		F	C			C			B	
Approach Delay (s)		23.6			48.0			23.8			15.2	
Approach LOS		C			D			C			B	

Intersection Summary			
HCM Average Control Delay	31.4	HCM Level of Service	C
HCM Volume to Capacity ratio	0.93		
Actuated Cycle Length (s)	80.0	Sum of lost time (s)	8.0
Intersection Capacity Utilization	95.2%	ICU Level of Service	F
Analysis Period (min)	15		
c Critical Lane Group			

Movement	EBT	EBR	WBL	WBT	NBL	NBR
Lane Configurations						
Ideal Flow (vphpl)	1900	1900	1900	1900	1900	1900
Total Lost time (s)	4.0		4.0	4.0	4.0	4.0
Lane Util. Factor	0.95		1.00	0.95	1.00	1.00
Frpb, ped/bikes	0.95		1.00	1.00	1.00	1.00
Flpb, ped/bikes	1.00		1.00	1.00	1.00	1.00
Frt	0.99		1.00	1.00	1.00	0.85
Flt Protected	1.00		0.95	1.00	0.95	1.00
Satd. Flow (prot)	3328		1770	3539	1770	1583
Flt Permitted	1.00		0.95	1.00	0.95	1.00
Satd. Flow (perm)	3328		1770	3539	1770	1583
Volume (vph)	1226	122	59	1223	132	47
Peak-hour factor, PHF	0.97	0.97	0.97	0.97	0.97	0.97
Adj. Flow (vph)	1264	126	61	1261	136	48
RTOR Reduction (vph)	0	0	0	0	0	0
Lane Group Flow (vph)	1390	0	61	1261	136	48
Confl. Peds. (#/hr)		213	348			
Turn Type			Prot			Perm
Protected Phases	4		3	8	2	
Permitted Phases						2
Actuated Green, G (s)	51.1		7.3	62.4	9.6	9.6
Effective Green, g (s)	51.1		7.3	62.4	9.6	9.6
Actuated g/C Ratio	0.64		0.09	0.78	0.12	0.12
Clearance Time (s)	4.0		4.0	4.0	4.0	4.0
Vehicle Extension (s)	3.0		3.0	3.0	3.0	3.0
Lane Grp Cap (vph)	2126		162	2760	212	190
v/s Ratio Prot	c0.42		0.03	c0.36	c0.08	
v/s Ratio Perm						0.03
v/c Ratio	0.65		0.38	0.46	0.64	0.25
Uniform Delay, d1	9.0		34.2	3.0	33.6	31.9
Progression Factor	0.81		1.21	0.49	0.67	0.61
Incremental Delay, d2	1.0		0.4	0.1	5.8	0.6
Delay (s)	8.2		41.6	1.6	28.2	20.2
Level of Service	A		D	A	C	C
Approach Delay (s)	8.2			3.5	26.1	
Approach LOS	A			A	C	

Intersection Summary			
HCM Average Control Delay	7.2	HCM Level of Service	A
HCM Volume to Capacity ratio	0.64		
Actuated Cycle Length (s)	80.0	Sum of lost time (s)	12.0
Intersection Capacity Utilization	59.1%	ICU Level of Service	B
Analysis Period (min)	15		
c Critical Lane Group			

Movement	EBL	EBT	EBR	WBL	WBT	WBR	NBL	NBT	NBR	SBL	SBT	SBR
Lane Configurations												
Ideal Flow (vphpl)	1900	1900	1900	1900	1900	1900	1900	1900	1900	1900	1900	1900
Total Lost time (s)	4.0	4.0		4.0	4.0		4.0	4.0		4.0	4.0	
Lane Util. Factor	1.00	0.95		1.00	0.95		1.00	0.95		1.00	0.95	
Frpb, ped/bikes	1.00	0.99		1.00	0.97		1.00	0.99		1.00	0.97	
Flpb, ped/bikes	0.94	1.00		0.99	1.00		1.00	1.00		1.00	1.00	
Frt	1.00	0.98		1.00	0.98		1.00	0.99		1.00	0.96	
Flt Protected	0.95	1.00		0.95	1.00		0.95	1.00		0.95	1.00	
Satd. Flow (prot)	1672	3441		1748	3337		1770	3472		1770	3279	
Flt Permitted	0.25	1.00		0.15	1.00		0.95	1.00		0.95	1.00	
Satd. Flow (perm)	437	3441		283	3337		1770	3472		1770	3279	
Volume (vph)	249	915	109	75	561	110	466	1450	124	130	701	255
Peak-hour factor, PHF	0.98	0.98	0.98	0.98	0.98	0.98	0.98	0.98	0.98	0.98	0.98	0.98
Adj. Flow (vph)	254	934	111	77	572	112	476	1480	127	133	715	260
RTOR Reduction (vph)	0	11	0	0	20	0	0	7	0	0	26	0
Lane Group Flow (vph)	254	1034	0	77	664	0	476	1600	0	133	949	0
Confl. Peds. (#/hr)	94		86	86		94			40			111
Turn Type	Perm			Perm			Prot			Prot		
Protected Phases		4			8		5	2		1	6	
Permitted Phases	4			8								
Actuated Green, G (s)	25.5	25.5		25.5	25.5		13.5	32.2		8.8	27.5	
Effective Green, g (s)	26.0	26.0		26.0	26.0		14.0	32.7		9.3	28.0	
Actuated g/C Ratio	0.32	0.32		0.32	0.32		0.18	0.41		0.12	0.35	
Clearance Time (s)	4.5	4.5		4.5	4.5		4.5	4.5		4.5	4.5	
Vehicle Extension (s)	2.0	2.0		2.0	2.0		2.0	2.0		2.0	2.0	
Lane Grp Cap (vph)	142	1118		92	1085		310	1419		206	1148	
v/s Ratio Prot		0.30			0.20		c0.27	c0.46		0.08	0.29	
v/s Ratio Perm	c0.58			0.27								
v/c Ratio	1.79	0.92		0.84	0.61		1.54	1.13		0.65	0.83	
Uniform Delay, d1	27.0	26.1		25.0	22.7		33.0	23.6		33.8	23.8	
Progression Factor	1.55	1.59		1.00	1.00		0.94	0.96		1.00	1.00	
Incremental Delay, d2	376.4	10.3		43.7	0.7		249.4	62.8		5.1	6.9	
Delay (s)	418.2	51.6		68.7	23.5		280.5	85.4		38.9	30.7	
Level of Service	F	D		E	C		F	F		D	C	
Approach Delay (s)		123.3			28.1			130.0			31.6	
Approach LOS		F			C			F			C	

Intersection Summary			
HCM Average Control Delay	92.8	HCM Level of Service	F
HCM Volume to Capacity ratio	1.42		
Actuated Cycle Length (s)	80.0	Sum of lost time (s)	8.0
Intersection Capacity Utilization	102.1%	ICU Level of Service	G
Analysis Period (min)	15		

c Critical Lane Group

Movement	WBL	WBR	NBT	NBR	SBL	SBT
Lane Configurations						
Sign Control	Stop		Free			Free
Grade	0%		0%			0%
Volume (veh/h)	30	41	1956	40	20	950
Peak Hour Factor	0.95	0.95	0.95	0.95	0.95	0.95
Hourly flow rate (vph)	32	43	2059	42	21	1000
Pedestrians	52		52			45
Lane Width (ft)	12.0		12.0			12.0
Walking Speed (ft/s)	4.0		4.0			4.0
Percent Blockage	4		4			4
Right turn flare (veh)						
Median type	None					
Median storage veh)						
Upstream signal (ft)			230			471
pX, platoon unblocked	0.73	0.66			0.66	
vC, conflicting volume	2726	1148			2153	
vC1, stage 1 conf vol						
vC2, stage 2 conf vol						
vCu, unblocked vol	2417	710			2232	
tC, single (s)	6.8	6.9			4.1	
tC, 2 stage (s)						
tF (s)	3.5	3.3			2.2	
p0 queue free %	0	81			85	
cM capacity (veh/h)	15	229			145	

Direction, Lane #	WB 1	NB 1	NB 2	SB 1	SB 2	SB 3
Volume Total	75	1373	728	21	500	500
Volume Left	32	0	0	21	0	0
Volume Right	43	0	42	0	0	0
cSH	33	1700	1700	145	1700	1700
Volume to Capacity	2.23	0.81	0.43	0.15	0.29	0.29
Queue Length 95th (ft)	212	0	0	12	0	0
Control Delay (s)	819.7	0.0	0.0	34.0	0.0	0.0
Lane LOS	F			D		
Approach Delay (s)	819.7	0.0		0.7		
Approach LOS	F					

Intersection Summary			
Average Delay	19.4		
Intersection Capacity Utilization	73.9%	ICU Level of Service	D
Analysis Period (min)	15		

Movement	EBL	EBT	EBR	WBL	WBT	WBR	NBL	NBT	NBR	SBL	SBT	SBR
Lane Configurations												
Ideal Flow (vphpl)	1900	1900	1900	1900	1900	1900	1900	1900	1900	1900	1900	1900
Total Lost time (s)		4.0		4.0	4.0			4.0		4.0	4.0	
Lane Util. Factor		0.91		1.00	0.95			1.00		1.00	1.00	
Frpb, ped/bikes		1.00		1.00	1.00			1.00		1.00	0.99	
Flpb, ped/bikes		1.00		1.00	1.00			1.00		1.00	1.00	
Frt		0.99		1.00	0.98			0.98		1.00	0.98	
Flt Protected		0.99		0.95	1.00			0.99		0.95	1.00	
Satd. Flow (prot)		5014		1768	3452			1793		1770	1806	
Flt Permitted		0.65		0.22	1.00			0.28		0.24	1.00	
Satd. Flow (perm)		3268		414	3452			501		442	1806	
Volume (vph)	160	864	40	91	1341	221	190	525	120	80	403	70
Peak-hour factor, PHF	0.98	0.98	0.98	0.98	0.98	0.98	0.98	0.98	0.98	0.98	0.98	0.98
Adj. Flow (vph)	163	882	41	93	1368	226	194	536	122	82	411	71
RTOR Reduction (vph)	0	5	0	0	17	0	0	8	0	0	8	0
Lane Group Flow (vph)	0	1081	0	93	1578	0	0	844	0	82	474	0
Confl. Peds. (#/hr)	24		4	4		24	48		12	12		48
Turn Type	Perm			Perm			Perm			Perm		
Protected Phases		4			8			2			6	
Permitted Phases	4			8			2			6		
Actuated Green, G (s)		46.0		46.0	46.0			24.0		24.0	24.0	
Effective Green, g (s)		47.0		47.0	47.0			25.0		25.0	25.0	
Actuated g/C Ratio		0.59		0.59	0.59			0.31		0.31	0.31	
Clearance Time (s)		5.0		5.0	5.0			5.0		5.0	5.0	
Lane Grp Cap (vph)		1920		243	2028			157		138	564	
v/s Ratio Prot					c0.46						0.26	
v/s Ratio Perm		0.33		0.22				c1.69		0.19		
v/c Ratio		1.66dl		0.38	0.78			5.38		0.59	0.84	
Uniform Delay, d1		10.2		8.8	12.5			27.5		23.2	25.6	
Progression Factor		1.00		1.58	1.63			1.00		0.77	0.79	
Incremental Delay, d2		1.2		3.4	2.3			1984.3		14.5	11.9	
Delay (s)		11.4		17.3	22.8			2011.8		32.3	32.2	
Level of Service		B		B	C			F		C	C	
Approach Delay (s)		11.4			22.5			2011.8			32.2	
Approach LOS		B			C			F			C	

Intersection Summary			
HCM Average Control Delay	425.5	HCM Level of Service	F
HCM Volume to Capacity ratio	2.38		
Actuated Cycle Length (s)	80.0	Sum of lost time (s)	8.0
Intersection Capacity Utilization	167.7%	ICU Level of Service	H
Analysis Period (min)	15		

dl Defacto Left Lane. Recode with 1 though lane as a left lane.
c Critical Lane Group

Movement	EBL	EBT	EBR	WBL	WBT	WBR	NBL	NBT	NBR	SBL	SBT	SBR
Lane Configurations												
Ideal Flow (vphpl)	1900	1900	1900	1900	1900	1900	1900	1900	1900	1900	1900	1900
Total Lost time (s)		4.0			4.0		4.0	4.0		4.0	4.0	
Lane Util. Factor		0.91			0.91		1.00	1.00		1.00	1.00	
Frpb, ped/bikes		1.00			1.00		1.00	1.00		1.00	1.00	
Flpb, ped/bikes		1.00			1.00		1.00	1.00		1.00	1.00	
Frt		0.99			0.99		1.00	0.96		1.00	0.98	
Flt Protected		1.00			1.00		0.95	1.00		0.95	1.00	
Satd. Flow (prot)		4999			5015		1770	1787		1766	1821	
Flt Permitted		0.76			0.79		0.38	1.00		0.20	1.00	
Satd. Flow (perm)		3800			3951		710	1787		363	1821	
Volume (vph)	60	804	70	101	1373	111	140	339	108	90	230	40
Peak-hour factor, PHF	0.95	0.95	0.95	0.95	0.95	0.95	0.95	0.95	0.95	0.95	0.95	0.95
Adj. Flow (vph)	63	846	74	106	1445	117	147	357	114	95	242	42
RTOR Reduction (vph)	0	12	0	0	11	0	0	14	0	0	8	0
Lane Group Flow (vph)	0	971	0	0	1657	0	147	457	0	95	276	0
Confl. Peds. (#/hr)			12	12					6	6		
Turn Type	Perm			Perm			Perm			Perm		
Protected Phases		4			8			2			6	
Permitted Phases	4			8			2			6		
Actuated Green, G (s)		51.5			51.5		20.5	20.5		20.5	20.5	
Effective Green, g (s)		51.5			51.5		20.5	20.5		20.5	20.5	
Actuated g/C Ratio		0.64			0.64		0.26	0.26		0.26	0.26	
Clearance Time (s)		4.0			4.0		4.0	4.0		4.0	4.0	
Lane Grp Cap (vph)		2446			2543		182	458		93	467	
v/s Ratio Prot								0.26			0.15	
v/s Ratio Perm		0.26			c0.42		0.21			c0.26		
v/c Ratio		0.40			0.65		0.81	1.00		1.02	0.59	
Uniform Delay, d1		6.8			8.7		27.9	29.7		29.8	26.1	
Progression Factor		1.17			1.57		1.00	1.00		1.20	1.20	
Incremental Delay, d2		0.0			1.0		30.7	41.5		90.3	4.4	
Delay (s)		8.0			14.7		58.6	71.2		125.8	35.8	
Level of Service		A			B		E	E		F	D	
Approach Delay (s)		8.0			14.7			68.2			58.4	
Approach LOS		A			B			E			E	

Intersection Summary			
HCM Average Control Delay	26.5	HCM Level of Service	C
HCM Volume to Capacity ratio	0.76		
Actuated Cycle Length (s)	80.0	Sum of lost time (s)	8.0
Intersection Capacity Utilization	100.6%	ICU Level of Service	G
Analysis Period (min)	15		

c Critical Lane Group

Movement	EBL	EBT	EBR	WBL	WBT	WBR	NBL	NBT	NBR	SBL	SBT	SBR
Lane Configurations												
Ideal Flow (vphpl)	1900	1900	1900	1900	1900	1900	1900	1900	1900	1900	1900	1900
Total Lost time (s)		4.0			4.0			4.0			4.0	
Lane Util. Factor		0.91			0.91			0.95			0.95	
Frpb, ped/bikes		1.00			1.00			1.00			0.99	
Flpb, ped/bikes		1.00			1.00			1.00			1.00	
Frt		0.99			0.98			0.98			0.97	
Flt Protected		1.00			1.00			0.99			0.98	
Satd. Flow (prot)		5020			4955			3433			3358	
Flt Permitted		0.72			0.82			0.73			0.57	
Satd. Flow (perm)		3630			4062			2528			1941	
Volume (vph)	77	895	50	79	1404	241	80	426	75	140	223	92
Peak-hour factor, PHF	0.99	0.99	0.99	0.99	0.99	0.99	0.99	0.99	0.99	0.99	0.99	0.99
Adj. Flow (vph)	78	904	51	80	1418	243	81	430	76	141	225	93
RTOR Reduction (vph)	0	7	0	0	28	0	0	15	0	0	28	0
Lane Group Flow (vph)	0	1026	0	0	1713	0	0	572	0	0	431	0
Confl. Peds. (#/hr)	9		17	17		9	12		10	10		12
Turn Type	Perm			Perm			Perm			Perm		
Protected Phases		4			8			2			6	
Permitted Phases	4			8			2			6		
Actuated Green, G (s)		50.0			50.0			19.0			19.0	
Effective Green, g (s)		51.5			51.5			20.5			20.5	
Actuated g/C Ratio		0.64			0.64			0.26			0.26	
Clearance Time (s)		5.5			5.5			5.5			5.5	
Lane Grp Cap (vph)		2337			2615			648			497	
v/s Ratio Prot												
v/s Ratio Perm		0.28			c0.42			c0.23			0.22	
v/c Ratio		0.44			0.66			0.88			0.94dl	
Uniform Delay, d1		7.1			8.8			28.6			28.4	
Progression Factor		1.61			1.20			1.00			1.18	
Incremental Delay, d2		0.5			1.0			16.1			18.0	
Delay (s)		11.9			11.5			44.7			51.6	
Level of Service		B			B			D			D	
Approach Delay (s)		11.9			11.5			44.7			51.6	
Approach LOS		B			B			D			D	

Intersection Summary			
HCM Average Control Delay	21.5	HCM Level of Service	C
HCM Volume to Capacity ratio	0.72		
Actuated Cycle Length (s)	80.0	Sum of lost time (s)	8.0
Intersection Capacity Utilization	126.7%	ICU Level of Service	H
Analysis Period (min)	15		

dl Defacto Left Lane. Recode with 1 though lane as a left lane.
c Critical Lane Group

Movement	EBL	EBT	EBR	WBL	WBT	WBR	NBL	NBT	NBR	SBL	SBT	SBR
Lane Configurations												
Ideal Flow (vphpl)	1900	1900	1900	1900	1900	1900	1900	1900	1900	1900	1900	1900
Total Lost time (s)		4.0			4.0			4.0			4.0	
Lane Util. Factor		0.91			0.91			1.00			1.00	
Frpb, ped/bikes		1.00			1.00			1.00			0.96	
Flpb, ped/bikes		1.00			1.00			1.00			1.00	
Frt		1.00			0.99			0.95			0.92	
Flt Protected		1.00			1.00			0.98			0.98	
Satd. Flow (prot)		5058			5031			1750			1608	
Flt Permitted		0.70			0.93			0.89			0.85	
Satd. Flow (perm)		3573			4679			1577			1392	
Volume (vph)	90	1050	10	10	1523	60	10	10	10	138	0	189
Peak-hour factor, PHF	0.96	0.96	0.95	0.95	0.96	0.96	0.95	0.95	0.95	0.96	0.95	0.96
Adj. Flow (vph)	94	1094	11	11	1586	62	11	11	11	144	0	197
RTOR Reduction (vph)	0	1	0	0	0	0	0	8	0	0	0	0
Lane Group Flow (vph)	0	1198	0	0	1659	0	0	25	0	0	341	0
Confl. Peds. (#/hr)						79						79
Turn Type	Perm			Perm			Perm			Perm		
Protected Phases		4			8			2			6	
Permitted Phases	4			8			2			6		
Actuated Green, G (s)		48.5			48.5			23.5			23.5	
Effective Green, g (s)		48.5			48.5			23.5			23.5	
Actuated g/C Ratio		0.61			0.61			0.29			0.29	
Clearance Time (s)		4.0			4.0			4.0			4.0	
Vehicle Extension (s)		3.0			3.0			3.0			3.0	
Lane Grp Cap (vph)		2166			2837			463			409	
v/s Ratio Prot												
v/s Ratio Perm		0.34			c0.35			0.02			c0.24	
v/c Ratio		0.55			0.58			0.05			0.83	
Uniform Delay, d1		9.3			9.6			20.3			26.4	
Progression Factor		0.86			1.00			1.00			1.10	
Incremental Delay, d2		0.9			0.9			0.0			13.3	
Delay (s)		9.0			10.5			20.3			42.3	
Level of Service		A			B			C			D	
Approach Delay (s)		9.0			10.5			20.3			42.3	
Approach LOS		A			B			C			D	

Intersection Summary			
HCM Average Control Delay	13.4	HCM Level of Service	B
HCM Volume to Capacity ratio	0.67		
Actuated Cycle Length (s)	80.0	Sum of lost time (s)	8.0
Intersection Capacity Utilization	92.5%	ICU Level of Service	F
Analysis Period (min)	15		

c Critical Lane Group

Movement	EBL	EBT	EBR	WBL	WBT	WBR	NBL	NBT	NBR	SBL	SBT	SBR
Lane Configurations												
Ideal Flow (vphpl)	1900	1900	1900	1900	1900	1900	1900	1900	1900	1900	1900	1900
Total Lost time (s)		4.0			4.0		4.0	4.0		4.0	4.0	
Lane Util. Factor		0.91			0.91		1.00	0.95		1.00	0.95	
Frpb, ped/bikes		1.00			0.99		1.00	0.99		1.00	0.99	
Flpb, ped/bikes		1.00			1.00		0.99	1.00		1.00	1.00	
Frt		0.99			0.96		1.00	0.99		1.00	0.98	
Flt Protected		0.98			1.00		0.95	1.00		0.95	1.00	
Satd. Flow (prot)		4915			4806		1748	3460		1770	3436	
Flt Permitted		0.68			0.71		0.22	1.00		0.11	1.00	
Satd. Flow (perm)		3382			3417		407	3460		213	3436	
Volume (vph)	392	695	111	110	1174	469	280	1213	110	196	601	99
Peak-hour factor, PHF	0.95	0.95	0.95	0.95	0.95	0.95	0.95	0.95	0.95	0.95	0.95	0.95
Adj. Flow (vph)	413	732	117	116	1236	494	295	1277	116	206	633	104
RTOR Reduction (vph)	0	7	0	0	1	0	0	7	0	0	12	0
Lane Group Flow (vph)	0	1255	0	0	1845	0	295	1386	0	206	725	0
Confl. Peds. (#/hr)	26		19			26	39		92	92		39
Turn Type	Perm			pm+pt			Perm			Perm		
Protected Phases		4		3	8			2			6	
Permitted Phases	4			8			2			6		
Actuated Green, G (s)		56.7			56.7		34.0	34.0		34.0	34.0	
Effective Green, g (s)		58.2			58.2		35.0	35.0		35.0	35.0	
Actuated g/C Ratio		0.58			0.58		0.35	0.35		0.35	0.35	
Clearance Time (s)		5.5			5.5		5.0	5.0		5.0	5.0	
Vehicle Extension (s)		2.0			2.0		2.0	2.0		2.0	2.0	
Lane Grp Cap (vph)		1945			1965		141	1197		74	1188	
v/s Ratio Prot								0.40			0.21	
v/s Ratio Perm		0.37			c0.54		0.73			c0.97		
v/c Ratio		2.58dl			0.94		2.09	1.16		2.78	0.61	
Uniform Delay, d1		14.5			19.9		33.1	33.1		33.1	27.4	
Progression Factor		1.00			1.00		1.00	1.00		1.00	1.00	
Incremental Delay, d2		0.6			9.2		514.8	80.9		839.0	2.3	
Delay (s)		15.1			29.1		547.9	114.0		872.1	29.8	
Level of Service		B			C		F	F		F	C	
Approach Delay (s)		15.1			29.1			189.8			213.8	
Approach LOS		B			C			F			F	

Intersection Summary			
HCM Average Control Delay	103.6	HCM Level of Service	F
HCM Volume to Capacity ratio	1.64		
Actuated Cycle Length (s)	101.2	Sum of lost time (s)	8.0
Intersection Capacity Utilization	121.8%	ICU Level of Service	H
Analysis Period (min)	15		

dl Defacto Left Lane. Recode with 1 though lane as a left lane.
c Critical Lane Group

Movement	EBL	EBT	EBR	WBL	WBT	WBR	NBL	NBT	NBR	SBL	SBT	SBR
Lane Configurations												
Ideal Flow (vphpl)	1900	1900	1900	1900	1900	1900	1900	1900	1900	1900	1900	1900
Total Lost time (s)		4.0			4.0			4.0	4.0		4.0	
Lane Util. Factor		0.91			0.91			1.00	1.00		1.00	
Frpb, ped/bikes		1.00			1.00			1.00	0.89		0.94	
Flpb, ped/bikes		1.00			1.00			0.96	1.00		0.98	
Frt		1.00			1.00			1.00	0.85		0.93	
Flt Protected		1.00			1.00			0.98	1.00		0.99	
Satd. Flow (prot)		5029			5027			1753	1406		1580	
Flt Permitted		0.78			0.78			0.77	1.00		0.90	
Satd. Flow (perm)		3943			3928			1384	1406		1438	
Volume (vph)	50	927	34	110	1598	50	104	104	200	40	40	90
Peak-hour factor, PHF	0.99	0.99	0.99	0.99	0.99	0.99	0.99	0.99	0.99	0.99	0.99	0.99
Adj. Flow (vph)	51	936	34	111	1614	51	105	105	202	40	40	91
RTOR Reduction (vph)	0	4	0	0	4	0	0	0	64	0	13	0
Lane Group Flow (vph)	0	1017	0	0	1772	0	0	210	138	0	158	0
Confl. Peds. (#/hr)	100		100	100		100	100		100	100		100
Turn Type	Perm			Perm			Perm		Perm	Perm		
Protected Phases		4			8			2			6	
Permitted Phases	4			8			2		2	6		
Actuated Green, G (s)		49.5			49.5			24.5	24.5		24.5	
Effective Green, g (s)		48.5			48.5			23.5	23.5		23.5	
Actuated g/C Ratio		0.61			0.61			0.29	0.29		0.29	
Clearance Time (s)		3.0			3.0			3.0	3.0		3.0	
Lane Grp Cap (vph)		2390			2381			407	413		422	
v/s Ratio Prot												
v/s Ratio Perm		0.26			c0.45			c0.15	0.10		0.11	
v/c Ratio		0.43			0.74			0.52	0.33		0.37	
Uniform Delay, d1		8.4			11.3			23.5	22.1		22.4	
Progression Factor		1.00			1.00			1.00	1.00		1.00	
Incremental Delay, d2		0.6			2.2			4.6	2.2		2.5	
Delay (s)		8.9			13.5			28.1	24.3		24.9	
Level of Service		A			B			C	C		C	
Approach Delay (s)		8.9			13.5			26.2			24.9	
Approach LOS		A			B			C			C	

Intersection Summary			
HCM Average Control Delay	14.2	HCM Level of Service	B
HCM Volume to Capacity ratio	0.67		
Actuated Cycle Length (s)	80.0	Sum of lost time (s)	8.0
Intersection Capacity Utilization	111.8%	ICU Level of Service	H
Analysis Period (min)	15		

c Critical Lane Group

Movement	EBL	EBT	EBR	WBL	WBT	WBR	NBL	NBT	NBR	SBL	SBT	SBR
Lane Configurations												
Ideal Flow (vphpl)	1900	1900	1900	1900	1900	1900	1900	1900	1900	1900	1900	1900
Total Lost time (s)	4.0	4.0		4.0	4.0		4.0	4.0	4.0	4.0	4.0	4.0
Lane Util. Factor	1.00	0.91		1.00	0.91		1.00	0.95	1.00	1.00	0.95	1.00
Frpb, ped/bikes	1.00	0.98		1.00	0.99		1.00	1.00	0.94	1.00	1.00	0.95
Flpb, ped/bikes	1.00	1.00		1.00	1.00		1.00	1.00	1.00	1.00	1.00	1.00
Frt	1.00	0.98		1.00	0.97		1.00	1.00	0.85	1.00	1.00	0.85
Flt Protected	0.95	1.00		0.95	1.00		0.95	1.00	1.00	0.95	1.00	1.00
Satd. Flow (prot)	1770	4912		1770	4864		1770	3539	1489	1770	3539	1499
Flt Permitted	0.95	1.00		0.95	1.00		0.95	1.00	1.00	0.95	1.00	1.00
Satd. Flow (perm)	1770	4912		1770	4864		1770	3539	1489	1770	3539	1499
Volume (vph)	230	796	111	130	1238	360	310	1181	290	510	511	180
Peak-hour factor, PHF	0.95	0.95	0.95	0.95	0.95	0.95	0.95	0.95	0.95	0.95	0.95	0.95
Adj. Flow (vph)	242	838	117	137	1303	379	326	1243	305	537	538	189
RTOR Reduction (vph)	0	15	0	0	44	0	0	0	11	0	0	45
Lane Group Flow (vph)	242	940	0	137	1638	0	326	1243	294	537	538	144
Confl. Peds. (#/hr)			81			22			50			43
Turn Type	Prot			Prot			Prot		pm+ov	Prot		pm+ov
Protected Phases	7	4		3	8		5	2	3	1	6	7
Permitted Phases									2			6
Actuated Green, G (s)	12.0	33.2		12.8	34.0		25.4	33.0	45.8	25.0	32.6	44.6
Effective Green, g (s)	11.0	34.2		11.8	35.0		24.4	34.0	45.8	24.0	33.6	44.6
Actuated g/C Ratio	0.09	0.29		0.10	0.29		0.20	0.28	0.38	0.20	0.28	0.37
Clearance Time (s)	3.0	5.0		3.0	5.0		3.0	5.0	3.0	3.0	5.0	3.0
Vehicle Extension (s)	3.0	3.0		3.0	3.0		3.0	3.0	3.0	3.0	3.0	3.0
Lane Grp Cap (vph)	162	1400		174	1419		360	1003	618	354	991	607
v/s Ratio Prot	c0.14	0.19		0.08	c0.34		0.18	c0.35	0.05	c0.30	0.15	0.02
v/s Ratio Perm									0.15			0.07
v/c Ratio	1.49	0.67		0.79	1.15		0.91	1.24	0.48	1.52	0.54	0.24
Uniform Delay, d1	54.5	37.9		52.9	42.5		46.7	43.0	28.0	48.0	36.7	26.0
Progression Factor	1.00	1.00		1.00	1.00		1.00	1.00	1.00	1.00	1.00	1.00
Incremental Delay, d2	251.9	2.6		20.6	77.9		25.3	116.3	0.6	246.7	2.1	0.2
Delay (s)	306.4	40.5		73.4	120.4		71.9	159.3	28.6	294.7	38.8	26.2
Level of Service	F	D		E	F		E	F	C	F	D	C
Approach Delay (s)		94.3			116.9			122.8			145.6	
Approach LOS		F			F			F			F	

Intersection Summary			
HCM Average Control Delay	120.2	HCM Level of Service	F
HCM Volume to Capacity ratio	1.21		
Actuated Cycle Length (s)	120.0	Sum of lost time (s)	8.0
Intersection Capacity Utilization	119.4%	ICU Level of Service	H
Analysis Period (min)	15		

c Critical Lane Group

Movement	EBL	EBT	EBR	WBL	WBT	WBR	NBL	NBT	NBR	SBL	SBT	SBR
Lane Configurations												
Ideal Flow (vphpl)	1900	1900	1900	1900	1900	1900	1900	1900	1900	1900	1900	1900
Total Lost time (s)		4.0			4.0		4.0	4.0		4.0	4.0	
Lane Util. Factor		1.00			1.00		1.00	0.95		1.00	0.95	
Frpb, ped/bikes		0.93			0.96		1.00	0.99		1.00	0.99	
Flpb, ped/bikes		0.98			0.97		0.96	1.00		0.98	1.00	
Frt		0.95			0.95		1.00	0.99		1.00	0.99	
Flt Protected		0.98			0.98		0.95	1.00		0.95	1.00	
Satd. Flow (prot)		1585			1616		1705	3488		1729	3446	
Flt Permitted		0.66			0.72		0.25	1.00		0.17	1.00	
Satd. Flow (perm)		1063			1181		443	3488		315	3446	
Volume (vph)	131	60	100	120	80	103	50	1109	50	42	856	73
Peak-hour factor, PHF	0.95	0.95	0.95	0.95	0.95	0.95	0.95	0.95	0.95	0.95	0.95	0.95
Adj. Flow (vph)	138	63	105	126	84	108	53	1167	53	44	901	77
RTOR Reduction (vph)	0	23	0	0	22	0	0	4	0	0	7	0
Lane Group Flow (vph)	0	283	0	0	296	0	53	1216	0	44	971	0
Confl. Peds. (#/hr)	100		100	100		100	100		100	100		100
Turn Type	Perm			Perm			Perm			Perm		
Protected Phases		4			4			2			6	
Permitted Phases	4			4			2			6		
Actuated Green, G (s)		23.7			23.7		54.3	54.3		54.3	54.3	
Effective Green, g (s)		23.2			23.2		53.8	53.8		53.8	53.8	
Actuated g/C Ratio		0.27			0.27		0.63	0.63		0.63	0.63	
Clearance Time (s)		3.5			3.5		3.5	3.5		3.5	3.5	
Vehicle Extension (s)		2.0			2.0		2.0	2.0		2.0	2.0	
Lane Grp Cap (vph)		290			322		280	2208		199	2181	
v/s Ratio Prot								c0.35			0.28	
v/s Ratio Perm		c0.27			0.25		0.12			0.14		
v/c Ratio		0.98			0.92		0.19	0.55		0.22	0.45	
Uniform Delay, d1		30.6			30.0		6.5	8.8		6.7	8.0	
Progression Factor		1.00			1.00		1.00	1.00		1.00	1.00	
Incremental Delay, d2		46.0			29.5		1.5	1.0		2.5	0.7	
Delay (s)		76.6			59.5		8.0	9.8		9.2	8.6	
Level of Service		E			E		A	A		A	A	
Approach Delay (s)		76.6			59.5			9.7			8.7	
Approach LOS		E			E			A			A	

Intersection Summary			
HCM Average Control Delay	21.8	HCM Level of Service	C
HCM Volume to Capacity ratio	0.68		
Actuated Cycle Length (s)	85.0	Sum of lost time (s)	8.0
Intersection Capacity Utilization	71.2%	ICU Level of Service	C
Analysis Period (min)	15		

c Critical Lane Group

Movement	EBL	EBT	EBR	WBL	WBT	WBR	NBL	NBT	NBR	SBL	SBT	SBR
Lane Configurations												
Ideal Flow (vphpl)	1900	1900	1900	1900	1900	1900	1900	1900	1900	1900	1900	1900
Total Lost time (s)	4.0	4.0		4.0	4.0		4.0	4.0		4.0	4.0	
Lane Util. Factor	1.00	0.95		1.00	0.95		1.00	0.95		1.00	0.95	
Frpb, ped/bikes	1.00	0.98		1.00	0.93		1.00	0.99		1.00	0.94	
Flpb, ped/bikes	1.00	1.00		1.00	1.00		0.96	1.00		0.98	1.00	
Frt	1.00	0.97		1.00	0.95		1.00	0.99		1.00	0.95	
Flt Protected	0.95	1.00		0.95	1.00		0.95	1.00		0.95	1.00	
Satd. Flow (prot)	1770	3370		1770	3137		1704	3489		1733	3136	
Flt Permitted	0.95	1.00		0.95	1.00		0.23	1.00		0.21	1.00	
Satd. Flow (perm)	1770	3370		1770	3137		413	3489		391	3136	
Volume (vph)	230	560	120	90	530	256	200	843	50	230	546	310
Peak-hour factor, PHF	0.98	0.98	0.98	0.98	0.98	0.98	0.98	0.98	0.98	0.98	0.98	0.98
Adj. Flow (vph)	235	571	122	92	541	261	204	860	51	235	557	316
RTOR Reduction (vph)	0	20	0	0	46	0	0	5	0	0	95	0
Lane Group Flow (vph)	235	673	0	92	756	0	204	906	0	235	778	0
Confl. Peds. (#/hr)			100			100	100		100	100		100
Turn Type	Prot			Prot			Perm			Perm		
Protected Phases	7	4		3	8			2			6	
Permitted Phases							2			6		
Actuated Green, G (s)	10.5	26.1		7.3	22.9		38.1	38.1		38.1	38.1	
Effective Green, g (s)	11.0	25.6		7.8	22.4		39.6	39.6		39.6	39.6	
Actuated g/C Ratio	0.13	0.30		0.09	0.26		0.47	0.47		0.47	0.47	
Clearance Time (s)	4.5	3.5		4.5	3.5		5.5	5.5		5.5	5.5	
Vehicle Extension (s)	2.0	2.0		2.0	2.0		2.0	2.0		2.0	2.0	
Lane Grp Cap (vph)	229	1015		162	827		192	1625		182	1461	
v/s Ratio Prot	c0.13	c0.20		0.05	c0.24			0.26			0.25	
v/s Ratio Perm							0.49			c0.60		
v/c Ratio	1.03	0.66		0.57	0.91		1.06	0.56		1.29	0.53	
Uniform Delay, d1	37.0	25.9		37.0	30.4		22.7	16.4		22.7	16.1	
Progression Factor	1.00	1.00		1.00	1.00		1.00	1.00		1.00	1.00	
Incremental Delay, d2	66.4	1.3		2.7	14.2		82.5	1.4		165.7	1.4	
Delay (s)	103.4	27.2		39.7	44.6		105.2	17.8		188.4	17.5	
Level of Service	F	C		D	D		F	B		F	B	
Approach Delay (s)		46.5			44.1			33.8			53.8	
Approach LOS		D			D			C			D	

Intersection Summary			
HCM Average Control Delay	44.5	HCM Level of Service	D
HCM Volume to Capacity ratio	1.18		
Actuated Cycle Length (s)	85.0	Sum of lost time (s)	16.0
Intersection Capacity Utilization	89.1%	ICU Level of Service	E
Analysis Period (min)	15		

c Critical Lane Group

Movement	EBL	EBR	NBL	NBT	SBT	SBR
Lane Configurations						
Ideal Flow (vphpl)	1900	1900	1900	1900	1900	1900
Total Lost time (s)	4.0	4.0	4.0	4.0	4.0	
Lane Util. Factor	1.00	1.00	1.00	0.95	0.95	
Frt	1.00	0.85	1.00	1.00	0.98	
Flt Protected	0.95	1.00	0.95	1.00	1.00	
Satd. Flow (prot)	1770	1583	1770	3539	3459	
Flt Permitted	0.95	1.00	0.95	1.00	1.00	
Satd. Flow (perm)	1770	1583	1770	3539	3459	
Volume (vph)	45	102	100	1975	752	133
Peak-hour factor, PHF	0.95	0.95	0.95	0.95	0.95	0.95
Adj. Flow (vph)	47	107	105	2079	792	140
RTOR Reduction (vph)	0	83	0	0	14	0
Lane Group Flow (vph)	47	24	105	2079	918	0
Turn Type		Perm	Prot			
Protected Phases	2		3	8	4	
Permitted Phases		2				
Actuated Green, G (s)	17.8	17.8	7.7	53.7	41.5	
Effective Green, g (s)	18.3	18.3	7.7	53.7	42.0	
Actuated g/C Ratio	0.23	0.23	0.10	0.67	0.52	
Clearance Time (s)	4.5	4.5	4.0	4.0	4.5	
Vehicle Extension (s)	3.0	3.0	3.0	3.0	3.0	
Lane Grp Cap (vph)	405	362	170	2376	1816	
v/s Ratio Prot	c0.03		0.06	c0.59	0.27	
v/s Ratio Perm		0.02				
v/c Ratio	0.12	0.07	0.62	0.88	0.51	
Uniform Delay, d1	24.4	24.2	34.7	10.5	12.3	
Progression Factor	1.00	1.00	1.00	1.00	1.93	
Incremental Delay, d2	0.1	0.1	6.5	4.9	0.6	
Delay (s)	24.6	24.2	41.3	15.4	24.3	
Level of Service	C	C	D	B	C	
Approach Delay (s)	24.3			16.6	24.3	
Approach LOS	C			B	C	

Intersection Summary			
HCM Average Control Delay	19.2	HCM Level of Service	B
HCM Volume to Capacity ratio	0.68		
Actuated Cycle Length (s)	80.0	Sum of lost time (s)	8.0
Intersection Capacity Utilization	64.6%	ICU Level of Service	C
Analysis Period (min)	15		

c Critical Lane Group

Movement	EBL	EBT	EBR	WBL	WBT	WBR	NBL	NBT	NBR	SBL	SBT	SBR
Lane Configurations												
Ideal Flow (vphpl)	1900	1900	1900	1900	1900	1900	1900	1900	1900	1900	1900	1900
Total Lost time (s)		4.0		4.0	4.0			4.0		4.0	4.0	
Lane Util. Factor		1.00		0.95	0.95			0.95		1.00	0.95	
Frpb, ped/bikes		1.00		1.00	0.99			0.99		1.00	0.97	
Flpb, ped/bikes		1.00		1.00	1.00			1.00		1.00	1.00	
Frt		0.95		1.00	0.91			0.97		1.00	0.96	
Flt Protected		0.98		0.95	1.00			1.00		0.95	1.00	
Satd. Flow (prot)		1747		1681	1599			3417		1770	3291	
Flt Permitted		0.70		0.74	1.00			1.00		0.95	1.00	
Satd. Flow (perm)		1247		1302	1599			3417		1770	3291	
Volume (vph)	10	10	10	354	330	470	0	1171	247	110	1330	460
Peak-hour factor, PHF	0.95	0.95	0.95	0.95	0.95	0.95	0.95	0.95	0.95	0.95	0.95	0.95
Adj. Flow (vph)	11	11	11	373	347	495	0	1233	260	116	1400	484
RTOR Reduction (vph)	0	11	0	0	57	0	0	19	0	0	37	0
Lane Group Flow (vph)	0	22	0	373	785	0	0	1474	0	116	1848	0
Confl. Peds. (#/hr)	4					4	44		12	12		44
Turn Type	Perm			Perm						Prot		
Protected Phases		7			8			2		1	6	
Permitted Phases	7			8								
Actuated Green, G (s)		3.3		27.5	27.5			35.7		5.5	45.7	
Effective Green, g (s)		3.8		28.0	28.0			36.2		6.0	46.2	
Actuated g/C Ratio		0.04		0.31	0.31			0.40		0.07	0.51	
Clearance Time (s)		4.5		4.5	4.5			4.5		4.5	4.5	
Vehicle Extension (s)		2.0		2.0	2.0			2.0		2.0	2.0	
Lane Grp Cap (vph)		53		405	497			1374		118	1689	
v/s Ratio Prot								0.43		0.07	c0.56	
v/s Ratio Perm		c0.02		0.29	0.49							
v/c Ratio		0.42		0.92	1.58			1.07		0.98	1.09	
Uniform Delay, d1		42.0		29.9	31.0			26.9		41.9	21.9	
Progression Factor		1.00		1.00	1.00			1.07		1.00	1.00	
Incremental Delay, d2		2.0		25.7	270.1			36.6		76.9	52.3	
Delay (s)		44.0		55.7	301.1			65.4		118.9	74.2	
Level of Service		D		E	F			E		F	E	
Approach Delay (s)		44.0			225.8			65.4			76.8	
Approach LOS		D			F			E			E	

Intersection Summary			
HCM Average Control Delay	111.1	HCM Level of Service	F
HCM Volume to Capacity ratio	1.23		
Actuated Cycle Length (s)	90.0	Sum of lost time (s)	12.0
Intersection Capacity Utilization	98.8%	ICU Level of Service	F
Analysis Period (min)	15		

c Critical Lane Group

Movement	EBL	EBT	EBR	WBL	WBT	WBR	NBL	NBT	NBR	SBL	SBT	SBR
Lane Configurations												
Ideal Flow (vphpl)	1900	1900	1900	1900	1900	1900	1900	1900	1900	1900	1900	1900
Total Lost time (s)	4.0	4.0		4.0	4.0		4.0	4.0		4.0	4.0	
Lane Util. Factor	0.97	0.95		1.00	0.95		1.00	0.95		1.00	0.95	
Frpb, ped/bikes	1.00	0.99		1.00	0.99		1.00	0.99		1.00	0.99	
Flpb, ped/bikes	1.00	1.00		1.00	1.00		1.00	1.00		1.00	1.00	
Frt	1.00	0.98		1.00	0.96		1.00	0.97		1.00	0.98	
Flt Protected	0.95	1.00		0.95	1.00		0.95	1.00		0.95	1.00	
Satd. Flow (prot)	3433	3427		1770	3372		1770	3403		1770	3404	
Flt Permitted	0.95	1.00		0.95	1.00		0.95	1.00		0.95	1.00	
Satd. Flow (perm)	3433	3427		1770	3372		1770	3403		1770	3404	
Volume (vph)	460	650	111	140	820	320	120	678	140	320	1164	220
Peak-hour factor, PHF	0.96	0.96	0.96	0.96	0.96	0.96	0.96	0.96	0.96	0.96	0.96	0.96
Adj. Flow (vph)	479	677	116	146	854	333	125	706	146	333	1212	229
RTOR Reduction (vph)	0	15	0	0	46	0	0	19	0	0	18	0
Lane Group Flow (vph)	479	778	0	146	1141	0	125	833	0	333	1423	0
Confl. Peds. (#/hr)	6		24	24		6	36		28	28		36
Turn Type	Prot			Prot			Prot			Prot		
Protected Phases	7	4		3	8		5	2		1	6	
Permitted Phases												
Actuated Green, G (s)	14.0	27.4		11.1	24.5		6.5	22.0		12.5	28.0	
Effective Green, g (s)	13.5	28.4		10.6	25.5		6.0	23.0		12.0	29.0	
Actuated g/C Ratio	0.15	0.32		0.12	0.28		0.07	0.26		0.13	0.32	
Clearance Time (s)	3.5	5.0		3.5	5.0		3.5	5.0		3.5	5.0	
Vehicle Extension (s)	2.0	2.0		2.0	2.0		2.0	2.0		2.0	2.0	
Lane Grp Cap (vph)	515	1081		208	955		118	870		236	1097	
v/s Ratio Prot	c0.14	c0.23		0.08	c0.34		0.07	0.24		c0.19	c0.42	
v/s Ratio Perm												
v/c Ratio	0.93	0.72		0.70	1.19		1.06	0.96		1.41	1.30	
Uniform Delay, d1	37.8	27.3		38.2	32.2		42.0	33.0		39.0	30.5	
Progression Factor	1.00	1.00		1.00	1.00		1.00	1.00		1.07	0.72	
Incremental Delay, d2	23.3	1.9		8.4	98.0		99.7	21.7		187.3	134.5	
Delay (s)	61.1	29.2		46.6	130.3		141.7	54.7		228.9	156.5	
Level of Service	E	C		D	F		F	D		F	F	
Approach Delay (s)		41.2			121.1			65.8			170.1	
Approach LOS		D			F			E			F	

Intersection Summary			
HCM Average Control Delay	108.3	HCM Level of Service	F
HCM Volume to Capacity ratio	1.24		
Actuated Cycle Length (s)	90.0	Sum of lost time (s)	16.0
Intersection Capacity Utilization	105.9%	ICU Level of Service	G
Analysis Period (min)	15		

c Critical Lane Group

Movement	EBL	EBT	EBR	WBL	WBT	WBR	NBL	NBT	NBR	SBL	SBT	SBR
Lane Configurations												
Ideal Flow (vphpl)	1900	1900	1900	1900	1900	1900	1900	1900	1900	1900	1900	1900
Total Lost time (s)	4.0	4.0		4.0	4.0		4.0	4.0		4.0	4.0	
Lane Util. Factor	1.00	0.95		1.00	0.95		1.00	0.95		1.00	0.95	
Frpb, ped/bikes	1.00	0.90		1.00	0.97		1.00	0.98		1.00	0.97	
Flpb, ped/bikes	1.00	1.00		1.00	1.00		1.00	1.00		0.98	1.00	
Frt	1.00	0.94		1.00	0.98		1.00	0.98		1.00	0.97	
Flt Protected	0.95	1.00		0.95	1.00		0.95	1.00		0.95	1.00	
Satd. Flow (prot)	1770	3007		1762	3390		1770	3422		1736	3328	
Flt Permitted	0.13	1.00		0.14	1.00		0.06	1.00		0.37	1.00	
Satd. Flow (perm)	246	3007		253	3390		120	3422		678	3328	
Volume (vph)	146	424	267	120	716	90	135	515	59	100	1319	320
Peak-hour factor, PHF	0.95	0.95	0.95	0.95	0.95	0.95	0.95	0.95	0.95	0.95	0.95	0.95
Adj. Flow (vph)	154	446	281	126	754	95	142	542	62	105	1388	337
RTOR Reduction (vph)	0	78	0	0	8	0	0	7	0	0	18	0
Lane Group Flow (vph)	154	649	0	126	841	0	142	597	0	105	1707	0
Confl. Peds. (#/hr)	72		137	137		72			58	58		92
Turn Type	pm pt			pm pt			pm pt			pm pt		
Protected Phases	7	4		3	8		5	2		1	6	
Permitted Phases	4			8			2			6		
Actuated Green, G (s)	36.8	29.8		34.8	28.8		67.6	61.5		65.8	60.6	
Effective Green, g (s)	37.3	30.3		35.3	29.3		68.6	62.0		66.8	61.1	
Actuated g/C Ratio	0.31	0.25		0.29	0.24		0.57	0.52		0.56	0.51	
Clearance Time (s)	4.0	4.5		4.0	4.5		4.5	4.5		4.5	4.5	
Vehicle Extension (s)	3.0	2.0		3.0	2.0		2.0	2.0		2.0	2.0	
Lane Grp Cap (vph)	165	759		150	828		159	1768		428	1695	
v/s Ratio Prot	c0.05	0.22		0.04	c0.25		c0.05	0.17		0.01	c0.51	
v/s Ratio Perm	0.24			0.21			0.46			0.12		
v/c Ratio	0.93	0.85		0.84	1.02		0.89	0.34		0.25	1.01	
Uniform Delay, d1	36.7	42.7		35.4	45.4		31.3	17.0		12.8	29.4	
Progression Factor	1.14	0.75		1.00	1.00		0.92	0.84		1.00	1.00	
Incremental Delay, d2	46.6	8.0		31.8	35.2		40.2	0.5		0.1	23.6	
Delay (s)	88.6	40.1		67.2	80.5		68.8	14.7		12.9	53.1	
Level of Service	F	D		E	F		E	B		B	D	
Approach Delay (s)		48.6			78.8			25.0			50.8	
Approach LOS		D			E			C			D	

Intersection Summary			
HCM Average Control Delay	52.2	HCM Level of Service	D
HCM Volume to Capacity ratio	1.00		
Actuated Cycle Length (s)	120.0	Sum of lost time (s)	16.0
Intersection Capacity Utilization	99.9%	ICU Level of Service	F
Analysis Period (min)	15		

c Critical Lane Group

Movement	EBL	EBT	EBR	WBL	WBT	WBR	NBL	NBT	NBR	SBL	SBT	SBR
Lane Configurations												
Ideal Flow (vphpl)	1900	1900	1900	1900	1900	1900	1900	1900	1900	1900	1900	1900
Total Lost time (s)		4.0		4.0	4.0		4.0	4.0		4.0	4.0	
Lane Util. Factor		0.91		1.00	0.95		1.00	1.00		1.00	1.00	
Frpb, ped/bikes		1.00		1.00	1.00		1.00	0.97		1.00	0.99	
Flpb, ped/bikes		1.00		1.00	1.00		1.00	1.00		0.96	1.00	
Frt		0.99		1.00	0.98		1.00	0.95		1.00	0.96	
Flt Protected		0.99		0.95	1.00		0.95	1.00		0.95	1.00	
Satd. Flow (prot)		4980		1762	3447		1770	1726		1704	1759	
Flt Permitted		0.66		0.21	1.00		0.10	1.00		0.50	1.00	
Satd. Flow (perm)		3328		391	3447		187	1726		889	1759	
Volume (vph)	210	710	50	72	1097	191	100	184	90	200	494	200
Peak-hour factor, PHF	0.95	0.95	0.95	0.95	0.95	0.95	0.95	0.95	0.95	0.95	0.95	0.95
Adj. Flow (vph)	221	747	53	76	1155	201	105	194	95	211	520	211
RTOR Reduction (vph)	0	5	0	0	13	0	0	16	0	0	13	0
Lane Group Flow (vph)	0	1016	0	76	1343	0	105	273	0	211	718	0
Confl. Peds. (#/hr)	24		18	18		24	24		48	48		24
Turn Type	Perm			Perm			Perm			Perm		
Protected Phases		4			8			2			6	
Permitted Phases	4			8			2			6		
Actuated Green, G (s)		51.0		51.0	51.0		49.0	49.0		49.0	49.0	
Effective Green, g (s)		52.0		52.0	52.0		50.0	50.0		50.0	50.0	
Actuated g/C Ratio		0.47		0.47	0.47		0.45	0.45		0.45	0.45	
Clearance Time (s)		5.0		5.0	5.0		5.0	5.0		5.0	5.0	
Lane Grp Cap (vph)		1573		185	1629		85	785		404	800	
v/s Ratio Prot					c0.39			0.16			0.41	
v/s Ratio Perm		0.31		0.19			c0.56			0.24		
v/c Ratio		3.03dl		0.41	0.82		1.24	0.35		0.52	0.90	
Uniform Delay, d1		22.0		19.0	25.1		30.0	19.4		21.5	27.6	
Progression Factor		1.00		1.00	1.00		1.00	1.00		1.00	1.00	
Incremental Delay, d2		2.1		6.6	4.9		173.7	1.2		4.8	14.9	
Delay (s)		24.1		25.6	30.0		203.7	20.7		26.2	42.5	
Level of Service		C		C	C		F	C		C	D	
Approach Delay (s)		24.1			29.7			69.4			38.9	
Approach LOS		C			C			E			D	

Intersection Summary			
HCM Average Control Delay	34.6	HCM Level of Service	C
HCM Volume to Capacity ratio	1.03		
Actuated Cycle Length (s)	110.0	Sum of lost time (s)	8.0
Intersection Capacity Utilization	142.7%	ICU Level of Service	H
Analysis Period (min)	15		

dl Defacto Left Lane. Recode with 1 though lane as a left lane.

c Critical Lane Group

Movement	EBL	EBT	EBR	WBL	WBT	WBR	NBL	NBT	NBR	SBL	SBT	SBR
Lane Configurations												
Ideal Flow (vphpl)	1900	1900	1900	1900	1900	1900	1900	1900	1900	1900	1900	1900
Total Lost time (s)		3.4			3.4		3.4	3.4		3.4	3.4	
Lane Util. Factor		0.91			0.91		1.00	0.95		1.00	0.95	
Frpb, ped/bikes		1.00			0.99		1.00	0.99		1.00	0.99	
Flpb, ped/bikes		1.00			1.00		1.00	1.00		1.00	1.00	
Frt		0.98			0.98		1.00	0.97		1.00	0.97	
Flt Protected		0.99			0.99		0.95	1.00		0.95	1.00	
Satd. Flow (prot)		4932			4913		1770	3399		1763	3418	
Flt Permitted		0.64			0.64		0.13	1.00		0.26	1.00	
Satd. Flow (perm)		3161			3148		244	3399		489	3418	
Volume (vph)	148	988	187	200	1146	191	120	376	90	365	1144	242
Peak-hour factor, PHF	0.95	0.95	0.95	0.95	0.95	0.95	0.95	0.95	0.95	0.95	0.95	0.95
Adj. Flow (vph)	156	1040	197	211	1206	201	126	396	95	384	1204	255
RTOR Reduction (vph)	0	16	0	0	15	0	0	17	0	0	15	0
Lane Group Flow (vph)	0	1377	0	0	1603	0	126	474	0	384	1444	0
Confl. Peds. (#/hr)	40		9			40	25		31	31		25
Turn Type	Perm			pm pt			pm pt			pm pt		
Protected Phases		4		3	8		5	2		1	6	
Permitted Phases	4			8			2			6		
Actuated Green, G (s)		57.7			57.7		34.4	29.9		54.3	46.3	
Effective Green, g (s)		58.3			58.3		35.1	30.5		54.9	46.9	
Actuated g/C Ratio		0.49			0.49		0.29	0.25		0.46	0.39	
Clearance Time (s)		4.0			4.0		3.5	4.0		3.5	4.0	
Vehicle Extension (s)		2.0			2.0		3.0	2.0		3.0	2.0	
Lane Grp Cap (vph)		1536			1529		130	864		447	1336	
v/s Ratio Prot							0.04	0.14		c0.15	c0.42	
v/s Ratio Perm		0.44			c0.51		0.25			0.24		
v/c Ratio		1.54dl			2.34dl		0.97	0.55		0.86	1.08	
Uniform Delay, d1		28.1			30.9		42.3	38.8		24.2	36.5	
Progression Factor		0.91			1.00		0.92	0.83		0.79	0.59	
Incremental Delay, d2		6.5			36.8		66.7	2.4		11.4	46.6	
Delay (s)		32.1			67.6		105.8	34.6		30.7	68.4	
Level of Service		C			E		F	C		C	E	
Approach Delay (s)		32.1			67.6			49.2			60.5	
Approach LOS		C			E			D			E	

Intersection Summary			
HCM Average Control Delay	54.1	HCM Level of Service	D
HCM Volume to Capacity ratio	1.06		
Actuated Cycle Length (s)	120.0	Sum of lost time (s)	10.2
Intersection Capacity Utilization	117.0%	ICU Level of Service	H
Analysis Period (min)	15		

dl Defacto Left Lane. Recode with 1 though lane as a left lane.
c Critical Lane Group

Movement	EBL	EBT	EBR	WBL	WBT	WBR	NBL	NBT	NBR	SBL	SBT	SBR
Lane Configurations												
Ideal Flow (vphpl)	1900	1900	1900	1900	1900	1900	1900	1900	1900	1900	1900	1900
Total Lost time (s)	4.0	4.0		4.0	4.0		4.0	4.0	4.0	4.0	4.0	4.0
Lane Util. Factor	1.00	0.91		1.00	0.91		1.00	0.95	1.00	1.00	0.95	1.00
Frpb, ped/bikes	1.00	0.99		1.00	0.99		1.00	1.00	0.96	1.00	1.00	0.96
Flpb, ped/bikes	1.00	1.00		1.00	1.00		1.00	1.00	1.00	1.00	1.00	1.00
Frt	1.00	0.98		1.00	0.96		1.00	1.00	0.85	1.00	1.00	0.85
Flt Protected	0.95	1.00		0.95	1.00		0.95	1.00	1.00	0.95	1.00	1.00
Satd. Flow (prot)	1770	4923		1770	4839		1770	3539	1515	1770	3539	1523
Flt Permitted	0.95	1.00		0.95	1.00		0.95	1.00	1.00	0.95	1.00	1.00
Satd. Flow (perm)	1770	4923		1770	4839		1770	3539	1515	1770	3539	1523
Volume (vph)	170	1209	172	210	1144	380	140	421	130	390	1442	250
Peak-hour factor, PHF	0.95	0.95	0.95	0.95	0.95	0.95	0.95	0.95	0.95	0.95	0.95	0.95
Adj. Flow (vph)	179	1273	181	221	1204	400	147	443	137	411	1518	263
RTOR Reduction (vph)	0	15	0	0	50	0	0	0	33	0	0	13
Lane Group Flow (vph)	179	1439	0	221	1554	0	147	443	104	411	1518	250
Confl. Peds. (#/hr)			66			23			38			26
Turn Type	Prot			Prot			Prot		pm ov	Prot		pm ov
Protected Phases	7	4		3	8		5	2	3	1	6	7
Permitted Phases									2			6
Actuated Green, G (s)	12.0	32.0		15.0	35.0		11.0	28.0	43.0	29.0	46.0	58.0
Effective Green, g (s)	11.0	33.0		14.0	36.0		10.0	29.0	43.0	28.0	47.0	58.0
Actuated g/C Ratio	0.09	0.28		0.12	0.30		0.08	0.24	0.36	0.23	0.39	0.48
Clearance Time (s)	3.0	5.0		3.0	5.0		3.0	5.0	3.0	3.0	5.0	3.0
Vehicle Extension (s)	2.0	2.0		2.0	2.0		2.0	2.0	2.0	2.0	2.0	2.0
Lane Grp Cap (vph)	162	1354		207	1452		148	855	593	413	1386	736
v/s Ratio Prot	0.10	0.29		c0.12	c0.32		c0.08	0.13	0.02	0.23	c0.43	0.03
v/s Ratio Perm									0.05			0.13
v/c Ratio	1.10	1.06		1.07	1.07		0.99	0.52	0.18	1.00	1.10	0.34
Uniform Delay, d1	54.5	43.5		53.0	42.0		55.0	39.4	26.4	45.9	36.5	19.2
Progression Factor	1.00	1.00		1.00	1.00		1.00	1.00	1.00	1.00	1.00	1.00
Incremental Delay, d2	101.6	43.0		81.6	45.0		71.6	2.2	0.1	42.7	54.6	0.1
Delay (s)	156.1	86.5		134.6	87.0		126.5	41.7	26.4	88.6	91.1	19.3
Level of Service	F	F		F	F		F	D	C	F	F	B
Approach Delay (s)		94.1			92.7			56.0			82.0	
Approach LOS		F			F			E			F	

Intersection Summary			
HCM Average Control Delay	85.2	HCM Level of Service	F
HCM Volume to Capacity ratio	1.09		
Actuated Cycle Length (s)	120.0	Sum of lost time (s)	16.0
Intersection Capacity Utilization	101.5%	ICU Level of Service	G
Analysis Period (min)	15		

c Critical Lane Group

Movement	EBL	EBT	EBR	WBL	WBT	WBR	NBL	NBT	NBR	SBL	SBT	SBR
Lane Configurations												
Ideal Flow (vphpl)	1900	1900	1900	1900	1900	1900	1900	1900	1900	1900	1900	1900
Total Lost time (s)		4.0		4.0	4.0			4.0		4.0	4.0	
Lane Util. Factor		1.00		0.95	0.95			0.95		1.00	0.95	
Frpb, ped/bikes		1.00		1.00	0.97			0.98		1.00	0.95	
Flpb, ped/bikes		0.99		1.00	1.00			1.00		1.00	1.00	
Frt		0.93		1.00	0.93			0.95		1.00	0.95	
Flt Protected		0.99		0.95	1.00			1.00		0.95	1.00	
Satd. Flow (prot)		1704		1681	1586			3275		1770	3209	
Flt Permitted		0.56		0.73	1.00			1.00		0.95	1.00	
Satd. Flow (perm)		963		1290	1586			3275		1770	3209	
Volume (vph)	10	10	20	127	120	120	0	1114	615	200	901	420
Peak-hour factor, PHF	0.95	0.95	0.95	0.95	0.95	0.95	0.95	0.95	0.95	0.95	0.95	0.95
Adj. Flow (vph)	11	11	21	134	126	126	0	1173	647	211	948	442
RTOR Reduction (vph)	0	20	0	0	38	0	0	67	0	0	47	0
Lane Group Flow (vph)	0	23	0	134	214	0	0	1753	0	211	1343	0
Confl. Peds. (#/hr)	36					36	48		16	16		48
Turn Type	Perm			Perm						Prot		
Protected Phases		7			8			2		1	6	
Permitted Phases	7			8								
Actuated Green, G (s)		4.0		16.5	16.5			52.0		9.5	66.0	
Effective Green, g (s)		4.5		17.0	17.0			52.5		10.0	66.5	
Actuated g/C Ratio		0.04		0.17	0.17			0.52		0.10	0.66	
Clearance Time (s)		4.5		4.5	4.5			4.5		4.5	4.5	
Vehicle Extension (s)		2.0		2.0	2.0			2.0		2.0	2.0	
Lane Grp Cap (vph)		43		219	270			1719		177	2134	
v/s Ratio Prot								c0.54		c0.12	0.42	
v/s Ratio Perm		c0.02		0.10	0.13							
v/c Ratio		0.53		0.61	0.79			1.02		1.19	0.63	
Uniform Delay, d1		46.7		38.4	39.8			23.8		45.0	9.6	
Progression Factor		1.00		1.00	1.00			0.72		1.00	1.00	
Incremental Delay, d2		6.2		3.5	13.7			12.4		128.8	1.4	
Delay (s)		53.0		42.0	53.5			29.4		173.8	11.1	
Level of Service		D		D	D			C		F	B	
Approach Delay (s)		53.0			49.5			29.4			32.5	
Approach LOS		D			D			C			C	

Intersection Summary			
HCM Average Control Delay	33.0	HCM Level of Service	C
HCM Volume to Capacity ratio	0.97		
Actuated Cycle Length (s)	100.0	Sum of lost time (s)	16.0
Intersection Capacity Utilization	89.4%	ICU Level of Service	E
Analysis Period (min)	15		

c Critical Lane Group

Movement	EBL	EBT	EBR	WBL	WBT	WBR	NBL	NBT	NBR	SBL	SBT	SBR
Lane Configurations												
Ideal Flow (vphpl)	1900	1900	1900	1900	1900	1900	1900	1900	1900	1900	1900	1900
Total Lost time (s)	4.0	4.0		4.0	4.0		4.0	4.0		4.0	4.0	
Lane Util. Factor	0.97	0.95		1.00	0.95		1.00	0.95		1.00	0.95	
Frpb, ped/bikes	1.00	0.98		1.00	0.99		1.00	0.97		1.00	0.98	
Flpb, ped/bikes	1.00	1.00		1.00	1.00		1.00	1.00		1.00	1.00	
Frt	1.00	0.98		1.00	0.94		1.00	0.96		1.00	0.99	
Flt Protected	0.95	1.00		0.95	1.00		0.95	1.00		0.95	1.00	
Satd. Flow (prot)	3433	3418		1770	3299		1770	3280		1770	3416	
Flt Permitted	0.95	1.00		0.95	1.00		0.95	1.00		0.95	1.00	
Satd. Flow (perm)	3433	3418		1770	3299		1770	3280		1770	3416	
Volume (vph)	460	930	133	160	580	350	100	949	350	300	698	60
Peak-hour factor, PHF	0.95	0.95	0.95	0.95	0.95	0.95	0.95	0.95	0.95	0.95	0.95	0.95
Adj. Flow (vph)	484	979	140	168	611	368	105	999	368	316	735	63
RTOR Reduction (vph)	0	12	0	0	90	0	0	38	0	0	6	0
Lane Group Flow (vph)	484	1107	0	168	889	0	105	1329	0	316	792	0
Confl. Peds. (#/hr)	15		48	48		15	123		48	48		123
Turn Type	Prot			Prot			Prot			Prot		
Protected Phases	7	4		3	8		5	2		1	6	
Permitted Phases												
Actuated Green, G (s)	11.5	27.0		8.5	24.0		8.7	34.0		13.5	38.8	
Effective Green, g (s)	11.0	28.0		8.0	25.0		8.2	35.0		13.0	39.8	
Actuated g/C Ratio	0.11	0.28		0.08	0.25		0.08	0.35		0.13	0.40	
Clearance Time (s)	3.5	5.0		3.5	5.0		3.5	5.0		3.5	5.0	
Vehicle Extension (s)	2.0	2.0		2.0	2.0		2.0	2.0		2.0	2.0	
Lane Grp Cap (vph)	378	957		142	825		145	1148		230	1360	
v/s Ratio Prot	c0.14	c0.32		0.09	0.27		0.06	c0.41		c0.18	0.23	
v/s Ratio Perm												
v/c Ratio	1.28	1.16		1.18	1.08		0.72	1.16		1.37	0.58	
Uniform Delay, d1	44.5	36.0		46.0	37.5		44.8	32.5		43.5	23.6	
Progression Factor	1.00	1.00		1.00	1.00		1.00	1.00		1.21	0.71	
Incremental Delay, d2	145.1	82.6		133.1	54.4		14.1	81.1		188.4	1.4	
Delay (s)	189.6	118.6		179.1	91.9		58.8	113.6		241.1	18.3	
Level of Service	F	F		F	F		E	F		F	B	
Approach Delay (s)		140.0			104.6			109.7			81.5	
Approach LOS		F			F			F			F	

Intersection Summary			
HCM Average Control Delay	111.8	HCM Level of Service	F
HCM Volume to Capacity ratio	1.23		
Actuated Cycle Length (s)	100.0	Sum of lost time (s)	16.0
Intersection Capacity Utilization	109.3%	ICU Level of Service	H
Analysis Period (min)	15		

c Critical Lane Group

Movement	EBL	EBT	EBR	WBL	WBT	WBR	NBL	NBT	NBR	SBL	SBT	SBR
Lane Configurations												
Ideal Flow (vphpl)	1900	1900	1900	1900	1900	1900	1900	1900	1900	1900	1900	1900
Total Lost time (s)	4.0	4.0		4.0	4.0			4.0			4.0	
Lane Util. Factor	1.00	0.95		1.00	0.95			0.95			0.95	
Frpb, ped/bikes	1.00	0.99		1.00	1.00			1.00			1.00	
Flpb, ped/bikes	1.00	1.00		0.99	1.00			1.00			1.00	
Frt	1.00	0.99		1.00	0.99			0.98			0.97	
Flt Protected	0.95	1.00		0.95	1.00			0.99			0.99	
Satd. Flow (prot)	1762	3458		1752	3500			3429			3390	
Flt Permitted	0.21	1.00		0.16	1.00			0.83			0.85	
Satd. Flow (perm)	392	3458		288	3500			2873			2907	
Volume (vph)	60	1161	120	70	1020	63	90	331	59	33	160	50
Peak-hour factor, PHF	0.99	0.99	0.99	0.99	0.99	0.99	0.99	0.99	0.99	0.99	0.99	0.99
Adj. Flow (vph)	61	1173	121	71	1030	64	91	334	60	33	162	51
RTOR Reduction (vph)	0	10	0	0	6	0	0	14	0	0	30	0
Lane Group Flow (vph)	61	1284	0	71	1088	0	0	471	0	0	217	0
Confl. Peds. (#/hr)	24		78	78		24	8		6	6		8
Turn Type	Perm			Perm			Perm			Perm		
Protected Phases		4			8			2			6	
Permitted Phases	4			8			2			6		
Actuated Green, G (s)	50.0	50.0		50.0	50.0			20.0			20.0	
Effective Green, g (s)	51.0	51.0		51.0	51.0			21.0			21.0	
Actuated g/C Ratio	0.64	0.64		0.64	0.64			0.26			0.26	
Clearance Time (s)	5.0	5.0		5.0	5.0			5.0			5.0	
Lane Grp Cap (vph)	250	2204		184	2231			754			763	
v/s Ratio Prot		c0.37			0.31							
v/s Ratio Perm	0.16			0.25				c0.16			0.07	
v/c Ratio	0.24	0.58		0.39	0.49			0.62			0.28	
Uniform Delay, d1	6.2	8.4		7.0	7.6			26.0			23.5	
Progression Factor	0.55	0.44		0.38	0.27			0.73			1.00	
Incremental Delay, d2	0.9	0.4		3.4	0.4			1.9			0.9	
Delay (s)	4.3	4.1		6.1	2.5			21.0			24.4	
Level of Service	A	A		A	A			C			C	
Approach Delay (s)		4.1			2.7			21.0			24.4	
Approach LOS		A			A			C			C	

Intersection Summary			
HCM Average Control Delay	7.7	HCM Level of Service	A
HCM Volume to Capacity ratio	0.59		
Actuated Cycle Length (s)	80.0	Sum of lost time (s)	8.0
Intersection Capacity Utilization	80.7%	ICU Level of Service	D
Analysis Period (min)	15		
c Critical Lane Group			

Movement	EBL	EBT	EBR	WBL	WBT	WBR	NBL	NBT	NBR	SBL	SBT	SBR
Lane Configurations												
Ideal Flow (vphpl)	1900	1900	1900	1900	1900	1900	1900	1900	1900	1900	1900	1900
Total Lost time (s)	3.4	3.4		3.4	3.4		3.4	3.4		3.4	3.4	
Lane Util. Factor	1.00	0.95		1.00	0.95		1.00	0.95		1.00	0.95	
Frpb, ped/bikes	1.00	0.98		1.00	0.96		1.00	0.99		1.00	0.95	
Flpb, ped/bikes	1.00	1.00		1.00	1.00		1.00	1.00		1.00	1.00	
Frt	1.00	0.98		1.00	0.98		1.00	0.99		1.00	0.96	
Flt Protected	0.95	1.00		0.95	1.00		0.95	1.00		0.95	1.00	
Satd. Flow (prot)	1770	3427		1770	3298		1770	3465		1770	3239	
Flt Permitted	0.14	1.00		0.16	1.00		0.11	1.00		0.12	1.00	
Satd. Flow (perm)	266	3427		303	3298		203	3465		224	3239	
Volume (vph)	249	915	109	75	561	110	466	1450	124	130	701	255
Peak-hour factor, PHF	0.98	0.98	0.98	0.98	0.98	0.98	0.98	0.98	0.98	0.98	0.98	0.98
Adj. Flow (vph)	254	934	111	77	572	112	476	1480	127	133	715	260
RTOR Reduction (vph)	0	8	0	0	15	0	0	6	0	0	33	0
Lane Group Flow (vph)	254	1037	0	77	669	0	476	1601	0	133	942	0
Confl. Peds. (#/hr)	94		86	86		94			40			111
Turn Type	pm pt			pm pt			pm pt			pm pt		
Protected Phases	7	4		3	8		5	2		1	6	
Permitted Phases	4			8			2			6		
Actuated Green, G (s)	39.8	32.6		27.2	24.0		61.7	52.2		38.2	32.7	
Effective Green, g (s)	40.9	33.7		28.4	24.6		62.3	52.8		39.4	33.3	
Actuated g/C Ratio	0.37	0.31		0.26	0.22		0.57	0.48		0.36	0.30	
Clearance Time (s)	3.5	4.5		4.0	4.0		4.0	4.0		4.0	4.0	
Vehicle Extension (s)	3.0	2.0		3.0	2.0		2.0	2.0		2.0	2.0	
Lane Grp Cap (vph)	275	1050		129	738		480	1663		166	981	
v/s Ratio Prot	c0.11	c0.30		0.02	0.20		c0.23	0.46		0.04	0.29	
v/s Ratio Perm	0.23			0.13			c0.33			0.24		
v/c Ratio	0.92	0.99		0.60	0.91		0.99	0.96		0.80	0.96	
Uniform Delay, d1	28.0	37.9		33.7	41.6		33.1	27.7		28.4	37.7	
Progression Factor	0.95	0.76		1.00	1.00		1.26	0.56		1.00	1.00	
Incremental Delay, d2	30.0	21.8		7.2	14.5		30.0	10.6		22.4	20.5	
Delay (s)	56.8	50.6		41.0	56.1		71.7	26.1		50.8	58.2	
Level of Service	E	D		D	E		E	C		D	E	
Approach Delay (s)		51.8			54.5			36.5			57.3	
Approach LOS		D			D			D			E	

Intersection Summary			
HCM Average Control Delay	47.3	HCM Level of Service	D
HCM Volume to Capacity ratio	0.97		
Actuated Cycle Length (s)	110.0	Sum of lost time (s)	6.8
Intersection Capacity Utilization	102.1%	ICU Level of Service	G
Analysis Period (min)	15		
c Critical Lane Group			

HCM Signalized Intersection Capacity Analysis 2030 PM Tower Mit
16: MacArthur Blvd. & Market St. 1/21/2008

Movement	EBL	EBT	EBR	WBL	WBT	WBR	NBL	NBT	NBR	SBL	SBT	SBR
Lane Configurations												
Ideal Flow (vphpl)	1900	1900	1900	1900	1900	1900	1900	1900	1900	1900	1900	1900
Total Lost time (s)		4.0		4.0	4.0		4.0	4.0		4.0	4.0	
Lane Util. Factor		0.91		1.00	0.95		1.00	1.00		1.00	1.00	
Frpb, ped/bikes		1.00		1.00	1.00		1.00	0.99		1.00	0.99	
Flpb, ped/bikes		1.00		1.00	1.00		0.98	1.00		1.00	1.00	
Frt		0.99		1.00	0.98		1.00	0.97		1.00	0.98	
Flt Protected		0.99		0.95	1.00		0.95	1.00		0.95	1.00	
Satd. Flow (prot)		5013		1768	3450		1734	1801		1770	1801	
Flt Permitted		0.66		0.20	1.00		0.29	1.00		0.13	1.00	
Satd. Flow (perm)		3309		368	3450		530	1801		242	1801	
Volume (vph)	160	864	40	91	1341	221	190	525	120	80	403	70
Peak-hour factor, PHF	0.98	0.98	0.98	0.98	0.98	0.98	0.98	0.98	0.98	0.98	0.98	0.98
Adj. Flow (vph)	163	882	41	93	1368	226	194	536	122	82	411	71
RTOR Reduction (vph)	0	4	0	0	12	0	0	7	0	0	6	0
Lane Group Flow (vph)	0	1082	0	93	1582	0	194	651	0	82	476	0
Confl. Peds. (#/hr)	24		4	4		24	48		12	12		48
Turn Type	Perm			Perm			Perm			Perm		
Protected Phases		4			8			2			6	
Permitted Phases	4			8			2			6		
Actuated Green, G (s)		54.0		54.0	54.0		46.0	46.0		46.0	46.0	
Effective Green, g (s)		55.0		55.0	55.0		47.0	47.0		47.0	47.0	
Actuated g/C Ratio		0.50		0.50	0.50		0.43	0.43		0.43	0.43	
Clearance Time (s)		5.0		5.0	5.0		5.0	5.0		5.0	5.0	
Lane Grp Cap (vph)		1655		184	1725		226	770		103	770	
v/s Ratio Prot					c0.46			0.36			0.26	
v/s Ratio Perm		0.33		0.25			c0.37			0.34		
v/c Ratio		2.26dl		0.51	0.92		0.86	0.84		0.80	0.62	
Uniform Delay, d1		20.4		18.4	25.4		28.5	28.2		27.3	24.5	
Progression Factor		1.00		1.00	1.00		1.00	1.00		1.00	1.00	
Incremental Delay, d2		2.0		9.6	9.3		32.1	11.0		45.6	3.7	
Delay (s)		22.5		28.0	34.6		60.6	39.2		72.9	28.2	
Level of Service		C		C	C		E	D		E	C	
Approach Delay (s)		22.5			34.3			44.1			34.7	
Approach LOS		C			C			D			C	

Intersection Summary			
HCM Average Control Delay	33.3	HCM Level of Service	C
HCM Volume to Capacity ratio	0.89		
Actuated Cycle Length (s)	110.0	Sum of lost time (s)	8.0
Intersection Capacity Utilization	135.7%	ICU Level of Service	H
Analysis Period (min)	15		

dl Defacto Left Lane. Recode with 1 though lane as a left lane.
c Critical Lane Group

HCM Signalized Intersection Capacity Analysis 2030 PM Tower Mit
20: MacArthur Blvd. & Telegraph Ave. 1/21/2008

Movement	EBL	EBT	EBR	WBL	WBT	WBR	NBL	NBT	NBR	SBL	SBT	SBR
Lane Configurations												
Ideal Flow (vphpl)	1900	1900	1900	1900	1900	1900	1900	1900	1900	1900	1900	1900
Total Lost time (s)		3.4			3.4		3.4	3.4		3.4	3.4	
Lane Util. Factor		0.91			0.91		1.00	0.95		1.00	0.95	
Frpb, ped/bikes		1.00			0.99		1.00	0.99		1.00	0.99	
Flpb, ped/bikes		1.00			1.00		1.00	1.00		1.00	1.00	
Frt		0.99			0.96		1.00	0.99		1.00	0.98	
Flt Protected		0.98			1.00		0.95	1.00		0.95	1.00	
Satd. Flow (prot)		4916			4803		1768	3457		1770	3434	
Flt Permitted		0.70			0.68		0.15	1.00		0.12	1.00	
Satd. Flow (perm)		3477			3299		278	3457		231	3434	
Volume (vph)	392	695	111	110	1174	469	280	1213	110	196	601	99
Peak-hour factor, PHF	0.95	0.95	0.95	0.95	0.95	0.95	0.95	0.95	0.95	0.95	0.95	0.95
Adj. Flow (vph)	413	732	117	116	1236	494	295	1277	116	206	633	104
RTOR Reduction (vph)	0	10	0	0	60	0	0	6	0	0	12	0
Lane Group Flow (vph)	0	1252	0	0	1786	0	295	1387	0	206	725	0
Confl. Peds. (#/hr)	26		19			26	39		92	92		39
Turn Type	Perm			pm pt			pm pt			pm pt		
Protected Phases		4		3	8		5	2		1	6	
Permitted Phases	4			8			2			6		
Actuated Green, G (s)		50.0			50.0		52.0	41.0		39.2	31.7	
Effective Green, g (s)		50.6			50.6		52.6	41.6		39.9	32.3	
Actuated g/C Ratio		0.46			0.46		0.48	0.38		0.36	0.29	
Clearance Time (s)		4.0			4.0		3.5	4.0		3.5	4.0	
Vehicle Extension (s)		2.0			2.0		3.0	2.0		3.0	2.0	
Lane Grp Cap (vph)		1599			1518		362	1307		190	1008	
v/s Ratio Prot							0.13	c0.40		c0.07	0.21	
v/s Ratio Perm		0.36			c0.54		0.26			0.32		
v/c Ratio		4.39dl			1.18		0.81	1.06		1.08	0.72	
Uniform Delay, d1		25.1			29.7		22.9	34.2		31.8	34.8	
Progression Factor		1.19			1.00		1.23	0.90		1.35	1.28	
Incremental Delay, d2		1.8			86.7		11.4	41.1		87.9	4.2	
Delay (s)		31.6			116.4		39.5	71.7		130.7	48.7	
Level of Service		C			F		D	E		F	D	
Approach Delay (s)		31.6			116.4			66.1			66.6	
Approach LOS		C			F			E			E	

Intersection Summary			
HCM Average Control Delay	74.8	HCM Level of Service	E
HCM Volume to Capacity ratio	1.12		
Actuated Cycle Length (s)	110.0	Sum of lost time (s)	10.2
Intersection Capacity Utilization	121.8%	ICU Level of Service	H
Analysis Period (min)	15		

dl Defacto Left Lane. Recode with 1 though lane as a left lane.
c Critical Lane Group